HITACHI

TECHNICAL CATALOGUE

MONO SPLIT

Cooling & Heating

MULTIZONE

OUTDOOR UNIT	INDOOR
RAM-110NP5E	RAK-18QXE
	RAK-(25-50)RXE
	RAK-15QPE
	RAK-(18-50)RPE
	RAK-50RPE1
	RAK-60RPE
	RAF-(25-50)RXE
	RAI-(25-60)RPE
	RAD-18QPE
	RAD-(25-60)RPE

HITACHI

Specifications in this catalogue are subject to change without prior notice in order for HITACHI to bring in the latest innovations to their customers

Whilst every effort is made to ensure that all dimensions and specifications are correct, any printers' error not rectified are outside the control of HITACHI, who cannot be held responsible for the same

EN standards list for test are following

LVD : EN 60335-2-40:2003 + A11:2004 + A12:2005 + A1:2006 + A2:2009 + A13:2012
EN 60335-1 :2012+A11:2014+A13:2017
EN62233:2008

EMC : EN55014-1:2017
EN55014-2 :2015
EN 61000-3-12 :2011
EN 61000-3-11 :2000

ENERGY EFFICIENCY : EN14511 :2011, EN 14825 :2012

SOUND POWER LEVEL : EN 12102 :2008

RoHS : EN 50581:2012

CONTENTS

CONTENTS 1

1 SPECIFICATIONS 1-1

1.1. MULTIZONE INDOOR 1-2
1.1.1. WALL TYPE (RAK-18QXE / 25RXE / 35RXE / 50RXE) 1-2
1.1.2. WALL TYPE (RAK-15QPE / 18RPE / 25RPE) 1-3
1.1.3. WALL TYPE (RAK-35RPE / 42RPE / 50RPE) 1-4
1.1.4. WALL TYPE (RAK-50RPE1 / 60RPE) 1-5
1.1.5. FLOOR TYPE (RAF-25RXE / 35RXE / 50RXE) 1-6
1.1.6. CEILING CASSETTE (RAI-25RPE / 35RPE) 1-7
1.1.7. CEILING CASSETTE (RAI-50RPE / 60RPE) 1-8
1.1.8. DUCT TYPE (RAD-18QPE / 25RPE / 35RPE) 1-9
1.1.9. DUCT TYPE (RAD-50RPE / 60RPE) 1-10
1.1.10. DUCT STATIC PRESSURE AND AIR FLOW (RAD-18QPE, RAD-25/35RPE) 1-11
1.1.11. DUCT STATIC PRESSURE AND AIR FLOW (RAD-50/60RPE) 1-12
1.2. MULTIZONE OUTDOOR 1-13
1.2.1. RAM-110NP5E 1-13

2 DIMENSIONAL DATA 2-1

2.1. MULTIZONE INDOOR UNITS 2-2
2.1.1. WALL TYPE: RAK-18QXE / 25RXE / 35RXE / 50RXE 2-2
2.1.2. WALL TYPE: RAK-15QPE / 18RPE / 25RPE / 35RPE / 42RPE / 50RPE 2-3
2.1.3. WALL TYPE: RAK-50RPE1 / 60RPE 2-4
2.1.4. FLOOR TYPE: RAF-25RXE / 35RXE / 50RXE 2-5
2.1.5. CEILING CASSETTE TYPE: RAI-25RPE / 35RPE / 50RPE / 60RPE / ECPP 2-6
2.1.6. DUCT TYPE: RAD-18QPE / 25RPE / 35RPE 2-7
2.1.7. DUCT TYPE: RAD-50RPE / 60RPE 2-8
2.2. MULTIZONE OUTDOOR UNITS 2-9
2.2.1. 5 ROOMS MULTIZONE: RAM-110NP5E 2-9

3 CAPACITIES AND SELECTION DATA 3-1

3.1. SYSTEM SELECTION PROCEDURE 3-2
3.1.1. SELECTION UNIT FEATURES 3-2
3.1.2. SELECTION GUIDE 3-2
3.1.3. MULTIZONE COMBINATION SELECTION 3-3
3.2. CAPACITY CHARACTERISTIC CURVES FOR MULTIZONE 3-13
3.2.1. RAM-110NP5E 3-13
3.3. CORRECTION FACTORS ACCORDING TO PIPING LENGTH 3-135
3.4. CORRECTION FACTORS ACCORDING TO DEFROSTING OPERATION 3-137
3.5. COMBINATION TABLE FOR MULTIZONE OUTDOOR 3-138
3.5.1. RAM-110NP5E 3-138

4 SOUND DATA 4-1

4.1. SOUND DATA 4-2
4.1.1. RAM-110NP5E 4-2

5 WORKING RANGE 5-1

5.1. POWER SUPPLY 5-2
5.2. WORKING RANGE 5-2
5.2.1. MULTIZONE 5-2

6 ELECTRICAL DATA 6-1

6.1. INDOOR UNIT 6-2
6.2. OUTDOOR UNIT 6-3

7 WIRING DIAGRAM 7-1

7.1. WIRING DIAGRAM 7-2
7.1.1. RAK-18QXE, RAK-25RXE, RAK-35RXE, RAK-50RXE 7-2
7.1.2. RAK-15QPE, RAK-18RPE, RAK-25RPE, RAK-35RPE, RAK-42RPE, RAK-50RPE 7-3
7.1.3. RAK-50RPE1, RAK-60RPE 7-4
7.1.4. RAF-25RXE, RAF-35RXE, RAF-50RXE 7-5
7.1.5. RAI-25RPE, RAI-35RPE, RAI-50RPE, RAI-60RPE 7-6
7.1.6. RAD-18QPE, RAD-25RPE, RAD-35RPE 7-7
7.1.7. RAD-50RPE, RAD-60RPE 7-8
7.1.8. RAM-110NP5E 7-9

8 REFRIGERANT CYCLE 8-1

8.1. MULTIZONE INDOOR UNITS 8-2
8.1.1. WALL TYPE: RAK-18QXE, RAK-25RXE, RAK-35RXE 8-2
8.1.2. WALL TYPE: RAK-50RXE 8-3
8.1.3. WALL TYPE: RAK-15QPE, RAK-18RPE, RAK-25RPE, RAK-35RPE, RAK-42RPE, RAK-50RPE 8-4
8.1.4. WALL TYPE: RAK-50RPE1, RAK-60RPE 8-5
8.1.5. FLOOR TYPE: RAF-25RXE, RAF-35RXE 8-6
8.1.6. FLOOR TYPE: RAF-50RXE 8-7
8.1.7. CEILING CASSETTE: RAI-25RPE, RAI-35RPE,RAI-50RPE, RAI-60RPE 8-8
8.1.8. DUCT TYPE: RAD-18QPE, RAD-25RPE, RAD-35RPE 8-9
8.1.9. DUCT TYPE: RAD-50RPE, RAD-60RPE 8-10
8.2. MULTIZONE OUTDOOR UNITS 8-11
8.2.1. 5 ROOMS MULTIZONE: RAM-110NP5E 8-11

9 CONTROL AND FUNCTION 9-1

9.1 WIRELESS REMOTE CONTROL FUNCTION 9-2
9.1.1. RAR-6N1, RAR-6N2, RAR-6NE4, RAR-6N5 AND RAR-6NE1 9-2
9.2 SHIFT VALUE 9-3
9.3 OPERATION LOCK 9-5
9.4 SETTING THE PREVENTION OF MUTUAL INTERFERENCE 9-6
9.5 INTERMITTENT FAN SPEED SETTING 9-6
9.6 FAN SPEED SETTING IN THERMO OFF IN COOLING 9-7
9.7 ERROR CODE INFORMATION 9-8
9.8 ADDITIONAL FUNCTION VIA DIP-SWITCH SETTINGS 9-10
9.8.1 AUTO RESTART FUNCTION 9-10
9.8.2 HEATING/COOLING ONLY MODE SELECTION 9-10

10 OPTION LIST 10-1

10.1 WIRED REMOTE CONTROL SPX-RCDA AND SPX-RCDB 10-2
10.1.1 SHIFT VALUE 10-3
10.1.2 ERROR CODE INFORMATION 10-4
10.2 H-LINK ADAPTOR – PSC 6RAD 10-7
10.2.1 SAFETY SUMMARY 10-7
10.2.2 INSTALLATION WORK 10-7
10.2.3 ELECTRICAL WIRING 10-8
10.2.4 DIP SWITCH SETTING 10-9
10.2.5 TEST RUN 10-10
10.3 DRY CONTACT (SPX-WDC2 AND SPX-WDC3) APPLICATION (USING DIP SWITCH) 10-11
10.4 DISTRIBUTOR – SPX-DST1 10-14
10.5 REMOTE SENSOR - SPX-RTH1 10-15
10.5.1 SELECTION OF INSTALLATION POSITION 10-15
10.5.2 INSTALLATION PROCEDURE 10-15
10.5.3 WIRING PROCEDURES 10-15

1 SPECIFICATIONS

CONTENTS

1 SPECIFICATIONS 1-1
1.1. MULTIZONE INDOOR 1-2
1.1.1. WALL TYPE (RAK-18QXE / 25RXE / 35RXE / 50RXE) 1-2
1.1.2. WALL TYPE (RAK-15QPE / 18RPE / 25RPE) 1-3
1.1.3. WALL TYPE (RAK-35RPE / 42RPE / 50RPE) 1-4
1.1.4. WALL TYPE (RAK-50RPE1 / 60RPE) 1-5
1.1.5. FLOOR TYPE (RAF-25RXE / 35RXE / 50RXE) 1-6
1.1.6. CEILING CASSETTE (RAI-25RPE / 35RPE) 1-7
1.1.7. CEILING CASSETTE (RAI-50RPE / 60RPE) 1-8
1.1.8. DUCT TYPE (RAD-18QPE / 25RPE / 35RPE) 1-9
1.1.9. DUCT TYPE (RAD-50RPE / 60RPE) 1-10
1.1.10. DUCT STATIC PRESSURE AND AIR FLOW 1-11
1.2. MULTIZONE OUTDOOR 1-13
1.2.1. RAM-110NP5E 1-13

1.1. MULTIZONE INDOOR

1.1.1. WALL TYPE (RAK-18QXE / 25RXE / 35RXE / 50RXE)

INDOOR	Unit	RAK-18QXE	RAK-25RXE	RAK-35RXE	RAK-50RXE
Nominal capacity adjustable		no	no	no	no
Nominal Cooling capacity (min - max)	kW	1.50 (0.90 - 2.50)	2.50 (0.90 - 3.10)	3.50 (0.90- 4.00)	5.00 (1.90- 5.20)
Cooling sensible capacity	kW	-	2.26	2.92	3.79
Nominal Heating capacity (min - max)	kW	2.00 (0.90 - 3.20)	3.20 (0.90- 4.20)	4.00 (0.90- 4.80)	5.80 (2.2- 7.00)
Noise level cooling (sound pressure) (SL / L / M / H)	dB(A)	20/24/30/34	20/27/35/43	22/29/37/45	25/31/39/47
Noise level heating (sound pressure) (SL / L / M / H)	dB(A)	20/24/32/35	20/28/36/43	22/30/37/45	25/31/39/48
Noise level (sound power)	dB(A)	51	58	60	60
Air flow cooling mode (SL / L / M / H)	m^3/h	312/350/400/440	300/330/510/600	320/340/520/660	350/400/580/720
Air flow heating mode (SL / L / M / H)	m^3/h	312/350/420/480	290/370/560/680	310/380/570/720	350/420/620/800
Fan Motor	W	30	30	30	30
Dehumidification	l/h	-	1.4	1.6	2.0
Dimensions (H x W x D)	mm	295 x 900 x 210	295 x 900 x 210	295 x 900 x 210	295 x 900 x 210
Weight	kg	11	11	11	11
Colour		White (N9.5)	White (N9.5)	White (N9.5)	White (N9.5)
Condensate Drain	mm	φ16mm	φ16mm	φ16mm	φ16mm
Running current (C/H)	A	-	1.09-4.35/1.09-5.22	1.09-6.09/1.09-6.96	2.17-9.13/2.17-11.74
Power supply		220-230V	220-230V	220-230V	220-230V
Cable section (Interconnection)	mm^2	1.50x 3+EARTH/-	1.50x 3+EARTH/-	1.50x 3+EARTH/-	2.50x 3+EARTH/-
Piping diameter (Liq / Gas)	Inch	1/4" / 3/8"	1/4" / 3/8"	1/4" / 3/8"	1/4" / 1/2"
Drain diameter (ext)	mm	φ16	φ16	φ16	φ16mm
Remote control (standard/optional)		RAR-6NE1/ SPX-RCDB	RAR-6NE1/ SPX-RCDB	RAR-6NE1/ SPX-RCDB	RAR-6NE1/ SPX-RCDB
Filter					
ACL Filter		Active Carbon	Active Carbon	Active Carbon	Active Carbon
ACL part name		SPX-CFH25	SPX-CFH25	SPX-CFH25	SPX-CFH25
Pre-filter (Standard / Optional)		Stainless/-	Stainless/-	Stainless/-	Stainless/-

NOTE:

1. *The nominal cooling and heating capacity is the combined capacity of the HITACHI standard split system, and are based on the ISO 5151.*

Operation Conditions		*Cooling*	*Heating*
Indoor Air Inlet Temperature	***dB***	*27.0 °C*	*20.0 °C*
	WB	*19.0 °C*	
Outdoor Air Inlet Temperature	***dB***	*35.0 °C*	*7.0 °C*
	WB		*6.0 °C*
***Piping Length**: 5.0 meters; **Piping Lift**: 0 meter* ***dB**: Dry Bulb; **WB**: Wet Bulb*			

2. *The Sound Pressure Level is based on the following conditions:*

- *0.8 meter beneath indoor height center*
- *1 meter from Discharge grille*

The above data was measured in an anechoic chamber. Please take into consideration reflected sound of your specific site

1.1.2. WALL TYPE (RAK-15QPE / 18RPE / 25RPE)

INDOOR	Unit	RAK-15QPE	RAK-18RPE	RAK-25RPE
Nominal capacity adjustable		no	no	no
Nominal Cooling capacity (min - max)	kW	1.80 (1.00-2.50)	2.00 (0.90 - 2.50)	2.50 (0.90 - 3.10)
Cooling sensible capacity	kW	-	1.94	2.05
Nominal Heating capacity (min - max)	kW	2.50 (1.10-3.20)	2.50 (0.90 - 3.20)	3.40 (0.90- 4.40)
Noise level cooling (sound pressure) (SL / L / M / H)	dB(A)	20 / 27 / 35 / 43	21 / 24 / 33 / 37	22 / 24 / 33 /40
Noise level heating (sound pressure) (SL / L / M / H)	dB(A)	20 / 28 / 36 / 43	19 / 22 / 33 / 38	20 / 23 / 34 / 41
Noise level (sound power)	dB(A)	58	51	54
Air flow cooling mode (SL / L / M / H)	m^3/h	300 / 330 / 510 / 600	312 / 350 / 400 / 440	333 / 370 / 430 / 510
Air flow heating mode (SL / L / M / H)	m^3/h	290 / 370 / 560 / 680	312 / 350 / 420 / 480	333 / 400 / 500/ 570
Fan Motor	W	30	30	30
Dehumidification	l/h	-	1.2	1.4
Dimensions (H x W x D)	mm	280 x 780 x 230	280 x 780 x 230	280 x 780 x 230
Weight	kg	8.5	8.5	8.5
Colour		Star White (N9.3)	Star White (N9.3)	Star White (N9.3)
Condensate Drain	mm	φ16mm	φ16mm	φ16mm
Running current (C/H)	A	-	1.09-4.39/1.09-4.22	1.09-5.61/1.09-6.52
Power supply		220-230V	220-230V	220-230V
Cable section (Interconnection)	mm^2	1.50x 3+EARTH/-	1.50x 3+EARTH/-	1.50x 3+EARTH/-
Piping diameter (Liq / Gas)	Inch	1/4" / 3/8"	1/4" / 3/8"	1/4" / 3/8"
Drain diameter (ext)	mm	φ16	φ16	φ16
Remote control (standard/optional)		RAR-6NE1/ SPX-RCDB	RAR-6NE1/ SPX-RCDB	RAR-6NE1/ SPX-RCDB
Filter				
ACL Filter		Active Carbon	Active Carbon	Active Carbon
ACL part name		SPX-CFH25	SPX-CFH25	SPX-CFH25
Pre-filter (Standard / Optional)		Washable/ Stainless-SPX-SPF8	Washable/ Stainless-SPX-SPF8	Washable/ Stainless-SPX-SPF8

NOTE:

1. *The nominal cooling and heating capacity is the combined capacity of the HITACHI standard split system, and are based on the ISO 5151.*

Operation Conditions		*Cooling*	*Heating*
Indoor Air Inlet Temperature	***dB***	*27.0 °C*	*20.0 °C*
	WB	*19.0 °C*	
Outdoor Air Inlet Temperature	***dB***	*35.0 °C*	*7.0 °C*
	WB		*6.0 °C*
***Piping Length**: 5.0 meters; **Piping Lift**: 0 meter* ***dB**: Dry Bulb; **WB**: Wet Bulb*			

2. *The Sound Pressure Level is based on the following conditions:*
   - *0.8 meter beneath indoor height center*
   - *1 meter from Discharge grille*

   The above data was measured in an anechoic chamber so that reflected sound should be taken into consideration when installing the unit.

1.1.3. WALL TYPE (RAK-35RPE / 42RPE / 50RPE)

INDOOR	Unit	RAK-35RPE	RAK-42RPE	RAK-50RPE
Nominal capacity adjustable		no	no	no
Nominal Cooling capacity (min - max)	kW	3.50 (0.90- 4.00)	4.20 (1.70- 5.00)	5.00 (1.90- 5.20)
Cooling sensible capacity	kW	2.42	3.25	3.43
Nominal Heating capacity (min - max)	kW	4.20 (0.90- 5.00)	5.40 (1.7- 6.00)	6.00 (2.2- 7.30)
Noise level cooling (sound pressure) (SL / L / M / H)	dB(A)	25/26/36/43	25/28/39/46	25/28/39/46
Noise level heating (sound pressure) (SL / L / M / H)	dB(A)	26/27/36/44	27/31/39/46	27/31/39/46
Noise level (sound power)	dB(A)	57	60	60
Air flow cooling mode (SL / L / M / H)	m^3/h	353/420/485/680	353/410/540/720	353/410/540/750
Air flow heating mode (SL / L / M / H)	m^3/h	363/480/570/ 780	380/500/610/800	380/500/610/820
Fan Motor	W	30	30	30
Dehumidification	l/h	1.6	1.8	2
Dimensions (H x W x D)	mm	280 x 780 x 230	280 x 780 x 230	280 x 780 x 230
Weight	kg	8.5	8.5	8.5
Colour		Star White (N9.3)	Star White (N9.3)	Star White (N9.3)
Condensate Drain	mm	φ16mm	φ16mm	φ16mm
Running current (C/H)	A	1.09-6.35/1.09-7.39	1.30-7.39/2.17-8.70	1.30-8.70/2.17-11.96
Power supply		220-230V	220-230V	220-230V
Cable section (Interconnection)	mm^2	1.50x 3+EARTH/-	2.50x 3+EARTH/-	2.50x 3+EARTH/-
Piping diameter (Liq / Gas)	Inch	1/4" / 3/8"	1/4" / 1/2"	1/4" / 1/2"
Drain diameter (ext)	mm	φ16	φ16mm	φ16mm
Remote control (standard/optional)		RAR-6NE1/ SPX-RCDB	RAR-6NE1/ SPX-RCDB	RAR-6NE1/ SPX-RCDB
Filter				
ACL Filter		Active Carbon	Active Carbon	Active Carbon
ACL part name		SPX-CFH25	SPX-CFH25	SPX-CFH25
Pre-filter (Standard / Optional)		Washable/ Stainless-SPX-SPF8	Washable/ Stainless-SPX-SPF8	Washable/ Stainless-SPX-SPF8

NOTE:

1. *The nominal cooling and heating capacity is the combined capacity of the HITACHI standard split system, and are based on the ISO 5151.*

Operation Conditions		*Cooling*	*Heating*
Indoor Air Inlet Temperature	***dB***	*27.0 °C*	*20.0 °C*
	WB	*19.0 °C*	
Outdoor Air Inlet Temperature	***dB***	*35.0 °C*	*7.0 °C*
	WB		*6.0 °C*
***Piping Length**: 5.0 meters; **Piping Lift**: 0 meter* ***dB**: Dry Bulb; **WB**: Wet Bulb*			

2. *The Sound Pressure Level is based on the following conditions:*
   - *0.8 meter beneath indoor height center*
   - *1 meter from Discharge grille*

   The above data was measured in an anechoic chamber so that reflected sound should be taken into consideration when installing the unit.

1.1.4. WALL TYPE (RAK-50RPE1 / 60RPE)

INDOOR	Unit	RAK-50RPE1	RAK-60RPE
Nominal capacity adjustable		no	no
Nominal Cooling capacity (min - max)	kW	5.00 (1.20- 5.80)	6.00 (1.20 - 6.50)
Cooling sensible capacity	kW	-	-
Nominal Heating capacity (min - max)	kW	6.00 (1.20- 6.80)	7.00 (1.20 - 8.00)
Noise level cooling (sound pressure) (SL / L / M / H)	dB(A)	26/33/39/47	30/33/42/48
Noise level heating (sound pressure) (SL / L / M / H)	dB(A)	26/33/39/47	33/34/42/49
Noise level (sound power)	dB(A)	60	60
Air flow cooling mode (SL / L / M / H)	m^3/h	310/410/570/720	480/540/690/930
Air flow heating mode (SL / L / M / H)	m^3/h	350/460/640/800	480/510/720/1050
Fan Motor	W	30	30
Dehumidification	l/h	2.8	2.8
Dimensions (H x W x D)	mm	300 x 900 x 230	300 x 900 x 230
Weight	kg	12	12
Colour		White (N9.5)	White (N9.5)
Condensate Drain	mm	φ16mm	φ16mm
Running current (C/H)	A	-	-
Power supply		From OUTDOOR	From OUTDOOR
Cable section (Interconnection)	mm^2	1.50x 3+EARTH/-	1.50x 3+EARTH/-
Piping diameter (Liq / Gas)	Inch	1/4" / 1/2"	1/4" / 1/2"
Drain diameter (ext)	mm	φ16mm	φ16mm
Remote control (optional)		SPX-RCKA2 / SPX-RCDB / SPX-WKT3	SPX-RCKA2 / SPX-RCDB / SPX-WKT3
Filter			
ACL Filter		Active Carbon	Active Carbon
ACL part name		SPX-CFH25	SPX-CFH25
Pre-filter (Standard / Optional)		NORMAL	NORMAL

NOTE:

1. *The nominal cooling and heating capacity is the combined capacity of the HITACHI standard split system, and are based on the ISO 5151.*

Operation Conditions		*Cooling*	*Heating*
Indoor Air Inlet Temperature	***dB***	*27.0 °C*	*20.0 °C*
	WB	*19.0 °C*	
Outdoor Air Inlet Temperature	***dB***	*35.0 °C*	*7.0 °C*
	WB		*6.0 °C*
***Piping Length**: 5.0 meters; **Piping Lift**: 0 meter* ***dB**: Dry Bulb; **WB**: Wet Bulb*			

2. *The Sound Pressure Level is based on the following conditions:*
   - *0.8 meter beneath indoor height center*
   - *1 meter from Discharge grille*

   The above data was measured in an anechoic chamber so that reflected sound should be taken into consideration when installing the unit.

1.1.5. FLOOR TYPE (RAF-25RXE / 35RXE / 50RXE)

INDOOR	Unit	RAF-25RXE	RAF-35RXE	RAF-50RXE
Nominal capacity adjustable		no	no	no
Nominal Cooling capacity (min – max)	kW	2.50 (0.90 - 3.10)	3.50 (0.90 - 4.00)	5.00 (0.90- 5.20)
Cooling sensible capacity	kW	2.50	2.90	3.80
Nominal Heating capacity (min – max)	kW	3.40 (0.90 - 4.40)	4.50 (0.90- 5.00)	6.00 (0.90- 8.10)
Noise level cooling (sound pressure) (SL / L / M / H)	dB(A)	20/26/31/38	20/26/31/39	22/29/36/43
Noise level heating (sound pressure) (SL / L / M / H)	dB(A)	20/26/31/38	20/26/31/39	22/29/36/44
Noise level (sound power)	dB(A)	52	53	57
Air flow cooling mode (SL / L / M / H)	m^3/h	270/390/510/630	270/390/510/630	300/450/540/700
Air flow heating mode (SL / L / M / H)	m^3/h	300/420/540/660	300/420/540/660	330/480/570/730
Fan Motor	W	38	38	38
Dehumidification	l/h	1.4	1.9	2.0
Dimensions (H x W x D)	mm	750 x 590 x 215	750 x 590 x 215	750 x 590 x 215
Weight	kg	15	15	15
Colour		ShadowWhite(5PB8. 7/0.5)	ShadowWhite(5PB8. 7/0.5)	ShadowWhite(5PB8. 7/0.5)
Condensate Drain	mm	φ16mm	φ16mm	φ16mm
Running current (C/H)	A	1.09-4.35/1.09-5.22	1.09-6.09/1.09-6.96	2.17-9.13/2.17-11.74
Power supply		220-230V	220-230V	220-230V
Cable section (Interconnection)	mm^2	1.50x 3+EARTH/-	1.50x 3+EARTH/-	1.50x 3+EARTH/-
Piping diameter (Liq / Gas)		1/4" / 3/8"	1/4" / 3/8"	1/4" / 3/8"
Drain diameter (ext)	mm	φ16	φ16	φ16
Remote control (standard/optional)		RAR-6NE4/SPX-RCDB	RAR-6NE4/ SPX-RCDB	RAR-6NE4/SPX-RCDB
Filter				
ACL Filter		Activated carbon	Activated carbon	Activated carbon
ACL part name		SPX-CFH25	SPX-CFH25	SPX-CFH25
Pre-filter (Standard)		STAINLESS	STAINLESS	STAINLESS

NOTE:

1. *The nominal cooling and heating capacity is the combined capacity of the HITACHI standard split system, and are based on the ISO 5151.*

Operation Conditions		*Cooling*	*Heating*
Indoor Air Inlet Temperature	***dB***	*27.0 °C*	*20.0 °C*
	WB	*19.0 °C*	
Outdoor Air Inlet Temperature	***dB***	*35.0 °C*	*7.0 °C*
	WB		*6.0 °C*
***Piping Length**: 5.0 meters; **Piping Lift**: 0 meter* ***dB**: Dry Bulb; **WB**: Wet Bulb*			

2. *The Sound Pressure Level is based on the following conditions:*
   - *Half height of the unit*
   - *1 meter from Discharge grille*

   The above data was measured in an anechoic chamber. Please take into consideration reflected sound of your specific site

1.1.6. CEILING CASSETTE (RAI-25RPE / 35RPE)

INDOOR	Unit	RAI-25RPE	RAI-35RPE	P-AP56NAMS
Nominal capacity adjustable		no	no	
Nominal Cooling capacity (min - max)	kW	2.5 (0.9-3.0)	3.5 (0.9-4.0)	
Cooling sensible capacity	kW	2.0	2.9	
Nominal Heating capacity (min - max)	kW	3.5 (0.9-5.0)	4.8 (0.9-6.6)	
Noise level cooling (sound pressure) (SL / L / M / H)	dB(A)	27/31/35/38	27/33/37/40	
Noise level heating (sound pressure) (SL / L / M / H)	dB(A)	28/32/36/39	28/34/38/41	
Noise level (sound power)	dB(A)	54	56	
Air flow cooling mode (SL / L / M / H)	m^3/h	360/505/590/660	360/505/590/660	
Air flow heating mode (SL / L / M / H)	m^3/h	444/540/630/720	444/540/630/720	
Fan Motor	W	57	57	
Drain pump pressure lift	cm	11.5	11.5	
Dehumidification	l/h	1.4	1.4	
Included drain pump	yes/no	Yes	Yes	
Max. height available for drain pump (RAD/RAI only)	cm	85(from panel)	85(from panel)	
Dimensions (H x W x D)	mm	285x570x570	285x570x570	-
Panel dimensions (H x W x D)	mm	-	-	30x620x620
Weight	kg	17	17	
Colour		-	-	
Condensate Drain	mm	-	-	
Panel weight	kg	-	-	2.8
Panel reference		-	-	
Color of the panel (RAL)		-	-	
Running current (C/H)	A	-	-	
Power supply		From OUTDOOR	From OUTDOOR	
Cable section (Interconnection)	mm^2	Refer to Outdoor	Refer to Outdoor	
Piping diameter (Liq / Gas)	Inch	1/4" / 3/8"	1/4" / 3/8"	
Drain diameter (ext)	mm	φ32mm	φ32mm	
Remote control (optional)		SPX-RCKA3 / SPX-RCDB / SPX-WKT3	SPX-RCKA3 / SPX-RCDB / SPX-WKT3	
Filter				
ACL Filter		-	-	
ACL part name		-	-	
Pre-filter (Standard / Optional)		NORMAL	NORMAL	

NOTE:

1. *The nominal cooling and heating capacity is the combined capacity of the HITACHI standard split system, and are based on the ISO 5151.*

Operation Conditions		*Cooling*	*Heating*
Indoor Air Inlet Temperature	***dB***	*27.0 °C*	*20.0 °C*
	WB	*19.0 °C*	
Outdoor Air Inlet Temperature	***dB***	*35.0 °C*	*7.0 °C*
	WB		*6.0 °C*
***Piping Length**: 5.0 meters; **Piping Lift**: 0 meter* ***dB**: Dry Bulb; **WB**: Wet Bulb*			

2. *The Sound Pressure Level is based on the following conditions:*

- *1.5 meter beneath the unit*

The above data was measured in an anechoic chamber so that reflected sound should be taken into consideration when installing the unit.

1.1.7. CEILING CASSETTE (RAI-50RPE / 60RPE)

INDOOR	Unit	RAI-50RPE	RAI-60RPE	P-AP56NAMS
Nominal capacity adjustable		no	no	
Nominal Cooling capacity (min - max)	kW	5.00 (1.20- 5.80)	6.00 (1.20 - 6.50)	
Cooling sensible capacity	kW	-	-	
Nominal Heating capacity (min - max)	kW	6.00 (1.20- 6.80)	7.00 (1.20 - 8.00)	
Noise level cooling (sound pressure) (SL / L / M / H)	dB(A)	29/35/39/43	29/35/39/43	
Noise level heating (sound pressure) (SL / L / M / H)	dB(A)	30/36/40/44	30/36/40/44	
Noise level (sound power)	dB(A)	56	56	
Air flow cooling mode (SL / L / M / H)	m^3/h	390/540/630/720	390/540/630/720	
Air flow heating mode (SL / L / M / H)	m^3/h	450/600/690/780	450/600/690/780	
Fan Motor	W	57	57	
Drain pump pressure lift	cm	11.5	11.5	
Dehumidification	l/h	2.8	3.8	
Included drain pump	yes/no	yes	yes	
Max. height available for drain pump (RAD/RAI only)	cm	85(from panel)	85(from panel)	
Dimensions (H x W x D)	mm	285x570x570	285x570x570	
Panel dimensions (H x W x D)	mm	-	-	30x620x620
Weight	kg	17	17	
Colour		-	-	
Condensate Drain	mm	-	-	
Panel weight	kg	-	-	2.8
Panel reference		-	-	
Color of the panel (RAL)		-	-	
Running current (C/H)	A	-	-	
Power supply		From OUTDOOR	From OUTDOOR	
Cable section (Interconnection)	mm^2	1.50x 3+EARTH/-	1.50x 3+EARTH/-	
Piping diameter (Liq / Gas)	Inch	1/4" / 1/2"	1/4" / 1/2"	
Drain diameter (ext)	mm	φ32mm	φ32mm	
Remote control (optional)		SPX-RCKA3 / SPX-RCDB / SPX-WKT3	SPX-RCKA3 / SPX-RCDB / SPX-WKT3	
Filter				
ACL Filter		-	-	
ACL part name		-	-	
Pre-filter (Standard / Optional)		Normal	Normal	

NOTE:

1. *The nominal cooling and heating capacity is the combined capacity of the HITACHI standard split system, and are based on the ISO 5151.*

Operation Conditions		*Cooling*	*Heating*
Indoor Air Inlet Temperature	***dB***	*27.0 °C*	*20.0 °C*
	WB	*19.0 °C*	
Outdoor Air Inlet Temperature	***dB***	*35.0 °C*	*7.0 °C*
	WB		*6.0 °C*
***Piping Length**: 5.0 meters; **Piping Lift**: 0 meter* ***dB**: Dry Bulb; **WB**: Wet Bulb*			

2. *The Sound Pressure Level is based on the following conditions:*

- *1.5 meter beneath the unit*

The above data was measured in an anechoic chamber so that reflected sound should be taken into consideration when installing the unit.

1.1.8. DUCT TYPE (RAD-18QPE / 25RPE / 35RPE)

INDOOR	Unit	RAD-18QPE	RAD-25RPE	RAD-35RPE
Nominal capacity adjustable		no	no	no
Nominal Cooling capacity (min - max)	kW	1.8 (0.9~2.5)	2.5 (0.9-3.0)	3.5 (0.9-4.0)
Cooling sensible capacity	kW	-	2.0	2.5
Nominal Heating capacity (min - max)	kW	2.5 (0.9~3.2)	3.5 (0.9-5.5)	4.8 (0.9-6.6)
Noise level cooling (sound pressure) (SL / L / M / H)	dB(A)	29/31/34/36	30/33/37/41	30/33/37/41
Noise level heating (sound pressure) (SL / L / M / H)	dB(A)	27/30/33/37	30/34/38/42	30/34/38/42
Noise level (sound power)	dB(A)	57	57	57
Air flow cooling mode (SL / L / M / H)	m^3/h	330/372/438/492	330/390/450/510	330/390/450/510
Air flow heating mode (SL / L / M / H)	m^3/h	330/372/450/552	330/390/450/510	330/390/450/510
Fan Motor	W	20	20	20
Drain pump pressure lift	cm	15	15	15
Static pressure switch at High (L / M / H) *for RAD	Pa (m^3/h)	-/-/90	70	70
Dehumidification	l/h	1.4	1.4	1.6
Included drain pump	yes/no	yes	yes	yes
Max. height available for drain pump (RAD/RAI only)	cm	30	30	30
Dimensions (H x W x D)	mm	235x750x400	235x750x400	235x750x400
Weight	kg	16	16	16
Colour		-	-	-
Condensate Drain	mm	-	-	-
Running current (C/H)	A	-	-	-
Power supply		From OUTDOOR	From OUTDOOR	From OUTDOOR
Cable section (Interconnection)	mm^2	Refer to Outdoor	Refer to Outdoor	Refer to Outdoor
Piping diameter (Liq / Gas)	Inch	1/4" / 3/8"	1/4" / 3/8"	1/4" / 3/8"
Drain diameter (ext)	mm	φ16mm	φ16mm	φ16mm
Remote control (optional only)		SPX-RCKA1 / SPX-RCDA / SPX-WKT3	SPX-RCKA1 / SPX-RCDA / SPX-WKT3	SPX-RCKA1 / SPX-RCDA / SPX-WKT3
Filter				
ACL Filter		-	-	
ACL part name		-	-	-
Pre-filter (Standard / Optional)		Normal	Normal	Normal

NOTE:

1. *The nominal cooling and heating capacity is the combined capacity of the HITACHI standard split system, and are based on the ISO 5151.*

Operation Conditions		Cooling	Heating
Indoor Air Inlet Temperature	dB	27.0 °C	20.0 °C
	WB	19.0 °C	
Outdoor Air Inlet Temperature	dB	35.0 °C	7.0 °C
	WB		6.0 °C
Piping Length: 5.0 meters; **Piping Lift**: 0 meter **dB**: Dry Bulb; **WB**: Wet Bulb			

2. *The Sound Pressure Level is based on the following conditions:*

- *1.5 meter beneath the unit*

The above data was measured in an anechoic chamber. Please take into consideration reflected sound of your specific site

1.1.9. DUCT TYPE (RAD-50RPE / 60RPE)

INDOOR	Unit	RAD-50RPE	RAD-60RPE
Nominal capacity adjustable		no	no
Nominal Cooling capacity (min - max)	kW	5.00 (1.20-5.80)	6.00 (1.20-6.50)
Cooling sensible capacity	kW	-	-
Nominal Heating capacity (min - max)	kW	6.00 (1.20-6.80)	7.00 (1.20-8.00)
Noise level cooling (sound pressure) (SL / L / M / H)	dB(A)	29/32/35/39	29/32/35/39
Noise level heating (sound pressure) (SL / L / M / H)	dB(A)	29/32/35/40	29/32/35/40
Noise level (sound power)	dB(A)	53	53
Air flow cooling mode (SL / L / M / H)	m^3/h	350/540/800/1140	350/540/800/1140
Air flow heating mode (SL / L / M / H)	m^3/h	350/540/800/1140	350/540/800/1140
Fan Motor	W	180	180
Drain pump pressure lift	cm	30	30
Static pressure switch at High (L / M / H) *for RAD	Pa (m^3/h)	50/100/150	50/100/150
Dehumidification	l/h	2.8	2.8
Included drain pump	yes/no	Yes	Yes
Max. height available for drain pump (RAD/RAI only)	cm	50	50
Dimensions (H x W x D)	mm	270x900x720	270x900x720
Weight	kg	35	35
Colour		-	-
Condensate Drain	mm	-	-
Running current (C/H)	A	-	-
Power supply		From OUTDOOR	From OUTDOOR
Cable section (Interconnection)	mm^2	1.50x 3+EARTH/-	1.50x 3+EARTH/-
Piping diameter (Liq / Gas)	Inch	1/4" / 1/2"	1/4" / 1/2"
Drain diameter (ext)	mm	φ32mm	φ32mm
Remote control (optional only)		SPX-RCKA1 / SPX-RCDA / SPX-WKT3	SPX-RCKA1 / SPX-RCDA / SPX-WKT3
Filter			
ACL Filter		-	-
ACL part name		-	-
Pre-filter (Standard / Optional)		Normal	Normal

NOTE:

1. *The nominal cooling and heating capacity is the combined capacity of the HITACHI standard split system, and are based on the ISO 5151.*

Operation Conditions		*Cooling*	*Heating*
Indoor Air Inlet Temperature	***dB***	*27.0 °C*	*20.0 °C*
	WB	*19.0 °C*	
Outdoor Air Inlet Temperature	***dB***	*35.0 °C*	*7.0 °C*
	WB		*6.0 °C*
***Piping Length**: 5.0 meters; **Piping Lift**: 0 meter* ***dB**: Dry Bulb; **WB**: Wet Bulb*			

2. *The Sound Pressure Level is based on the following conditions:*
   - *1.5 meter beneath the unit*

   The above data was measured in an anechoic chamber. Please take into consideration reflected sound of your specific site

1.1.10. DUCT STATIC PRESSURE AND AIR FLOW (RAD-18QPE, RAD-25/35RPE)

RAD-18QPE
RAD-25RPE
RAD-35RPE

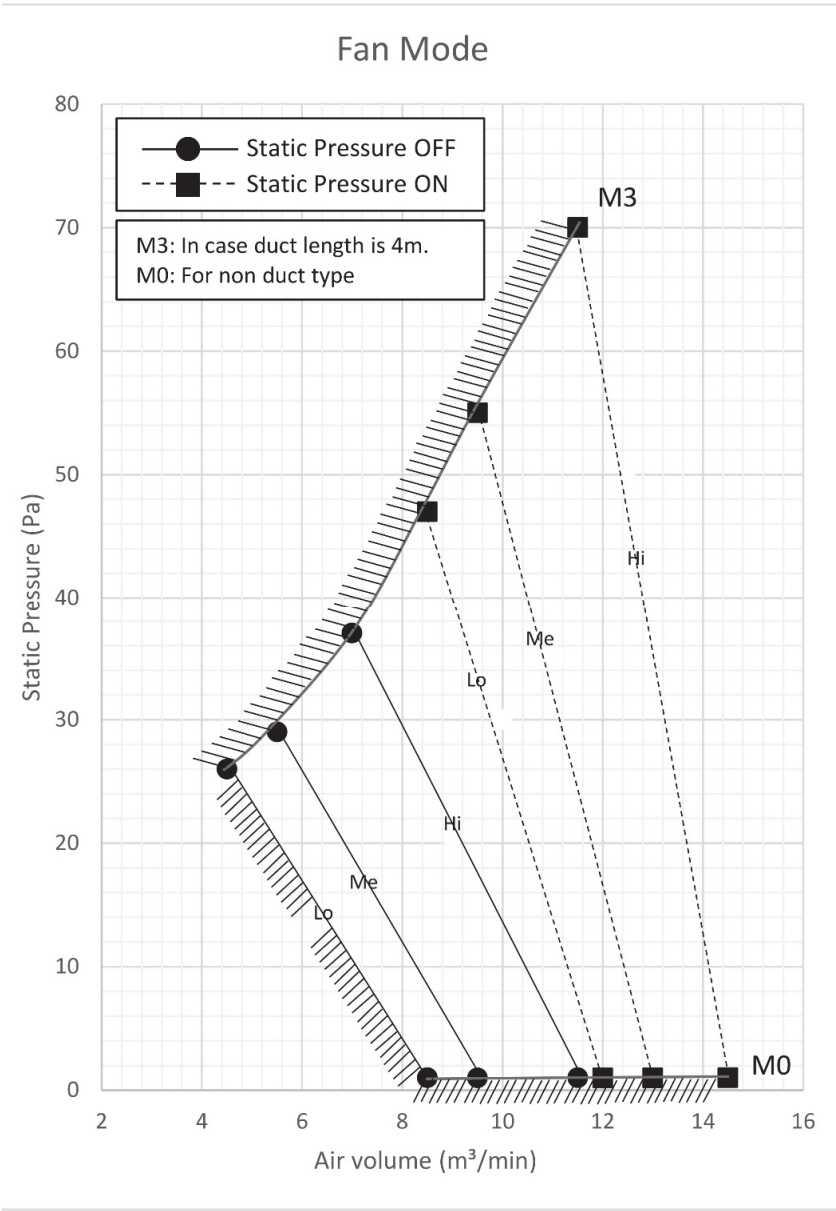

1.1.11. DUCT STATIC PRESSURE AND AIR FLOW (RAD-50/60RPE)

RAD-50RPE
RAD-60RPE

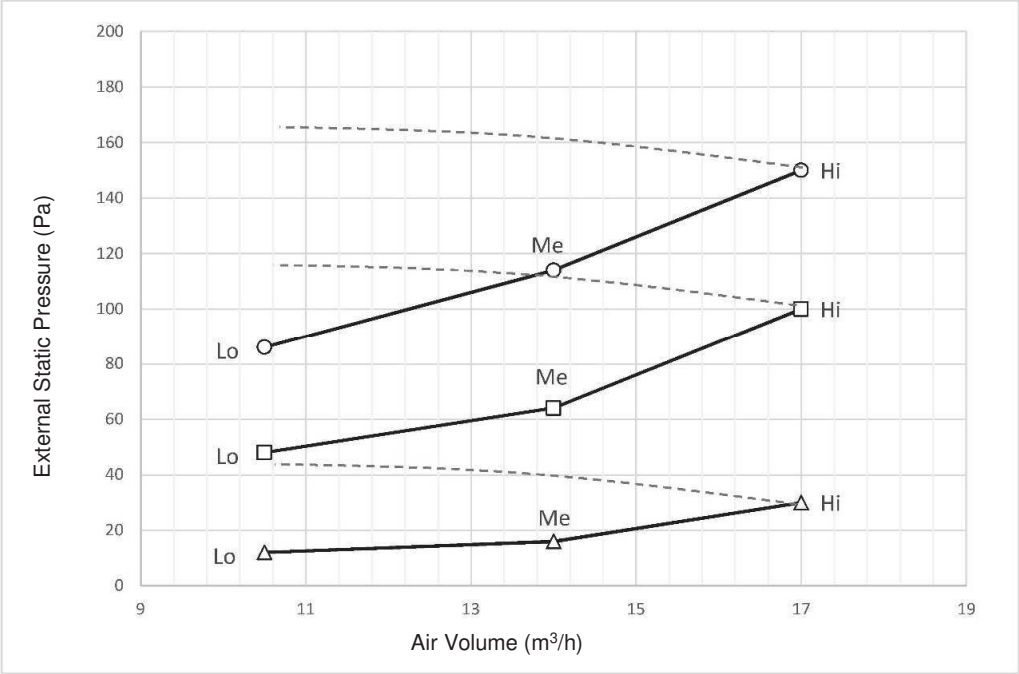

High Static Pressure Mode
Medium Static Pressure Mode
Normal Mode

1.2.1. RAM-110NP5E

OUTDOOR		UNIT	RAM-110NP5E
Minimum / Maximum indoor units connectable			2 / 5
Minimum / Maximum connected capacity			3.0kW / 16.6kW
Nominal Cooling capacity (min - max)		kW	10.0(1.5-12.5)
Nominal Heating capacity (min - max)		kW	12.0 (1.5-12.7)
Nominal cooling power input (min - max)		kW	3.096 (0.50-4.50)
Nominal heating power input (min - max)		kW	3.158 (0.50-5.00)
Heating at -7C (Full load with defrost)		kW	8.0
EER / COP			3.23/3.80
SEER / SCOP			6.52/4.22
Energy class (SEER/SCOP)			A++/A+
Noise level cooling (sound pressure)		dB(A)	54
Noise level heating (sound pressure)		dB(A)	54
Noise level (sound power)		dB(A)	68/68
Air flow (Cooling / Heating)		m^3/h	4000/4000
Dimensions (H x W x D)		mm	800x950x370
Weight		kg	76
Colour			Beige (5Y7/2)
Power supply			220-230V/1ph/50/60Hz
Recommended fuse size		A	25
Starting current (C/H)		A	8
Running current (C/H)		A	14.81-14.17/15.11-13.87
Cable section (Power)		mm^2	2.50 x 2 + EARTH
Cable section (Interconnection)		mm^2	1.50 x 3 + EARTH
Piping diameter (Liq / Gas)		Inch	1/4" x 5 / (3/8" x 3) + (1/2" x 2)
Minimum piping length		m	3
Maximum piping length / height difference		m	75 / 20
Current quantity of refrigerant / Chargeless		kg / $TeqCO^2$	2.40 / 1.620
Chargeless / Additional refrigerant charge		m / g/m	30 / 13
Working range (cooling / heating)		°C	-10 ~ 46 / -15 ~ 24
Refrigerant / GWP			R32 / 675
Condenser Fan			Propeller Fan
Compressor	Type		2 Cylinder Rotary
	Oil Type		ACS-68R or equivalent
	Oil Charge	ml	830ml±20
	Coil Resistance	Ω	1.138Ω at 75℃
	Quantity		1

NOTE:

1. *The Sound Pressure Level is based on the following conditions:*
   - *Half height of the unit*
   - *1 meter from Discharge grille*

The above data was measured in an anechoic chamber. Please take into consideration reflected sound of your specific site

2 DIMENSIONAL DATA

CONTENTS

2 DIMENSIONAL DATA 2-1
2.1. MULTIZONE INDOOR UNITS 2-2
2.1.1. WALL TYPE: RAK-18QXE / 25RXE / 35RXE / 50RXE 2-2
2.1.2. WALL TYPE: RAK-15QPE / 18RPE / 25RPE / 35RPE / 42RPE / 50RPE 2-3
2.1.3. WALL TYPE: RAK-50RPE1 / 60RPE 2-4
2.1.4. FLOOR TYPE: RAF-25RXE / 35RXE / 50RXE 2-5
2.1.5. CEILING CASSETTE TYPE: RAI-25RPE / 35RPE / 50RPE / 60RPE / ECPP 2-6
2.1.6. DUCT TYPE: RAD-18QPE / 25RPE / 35RPE 2-7
2.1.7. DUCT TYPE: RAD-50RPE / 60RPE 2-8
2.2. MULTIZONE OUTDOOR UNITS 2-9
2.2.1. 5 ROOMS MULTIZONE: RAM-110NP5E 2-9

2.1. MULTIZONE INDOOR UNITS

2.1.1. WALL TYPE: RAK-18QXE / 25RXE / 35RXE / 50RXE

Unit : mm

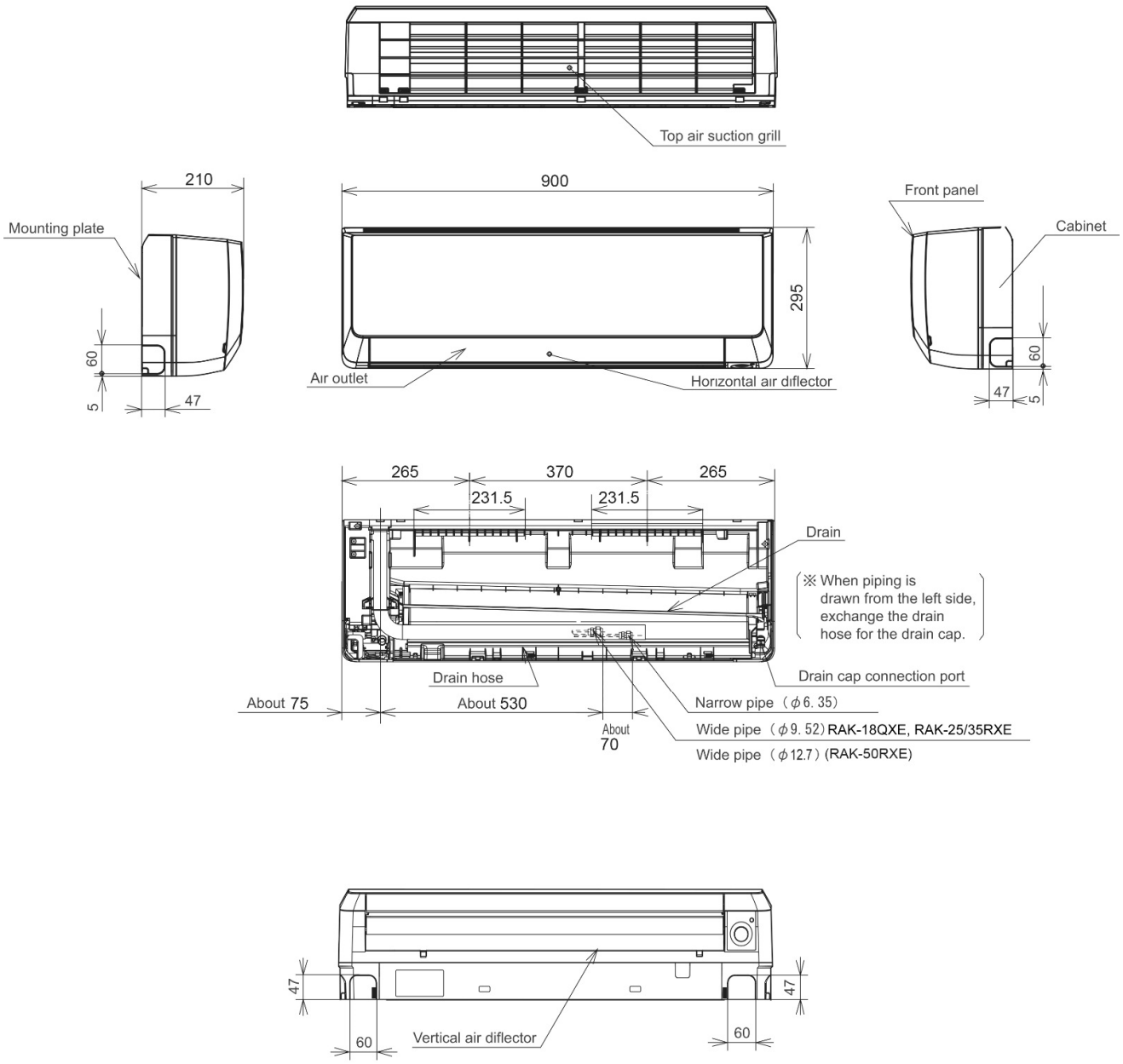

2.1.2. WALL TYPE: RAK-15QPE / 18RPE / 25RPE / 35RPE / 42RPE / 50RPE

Unit : mm

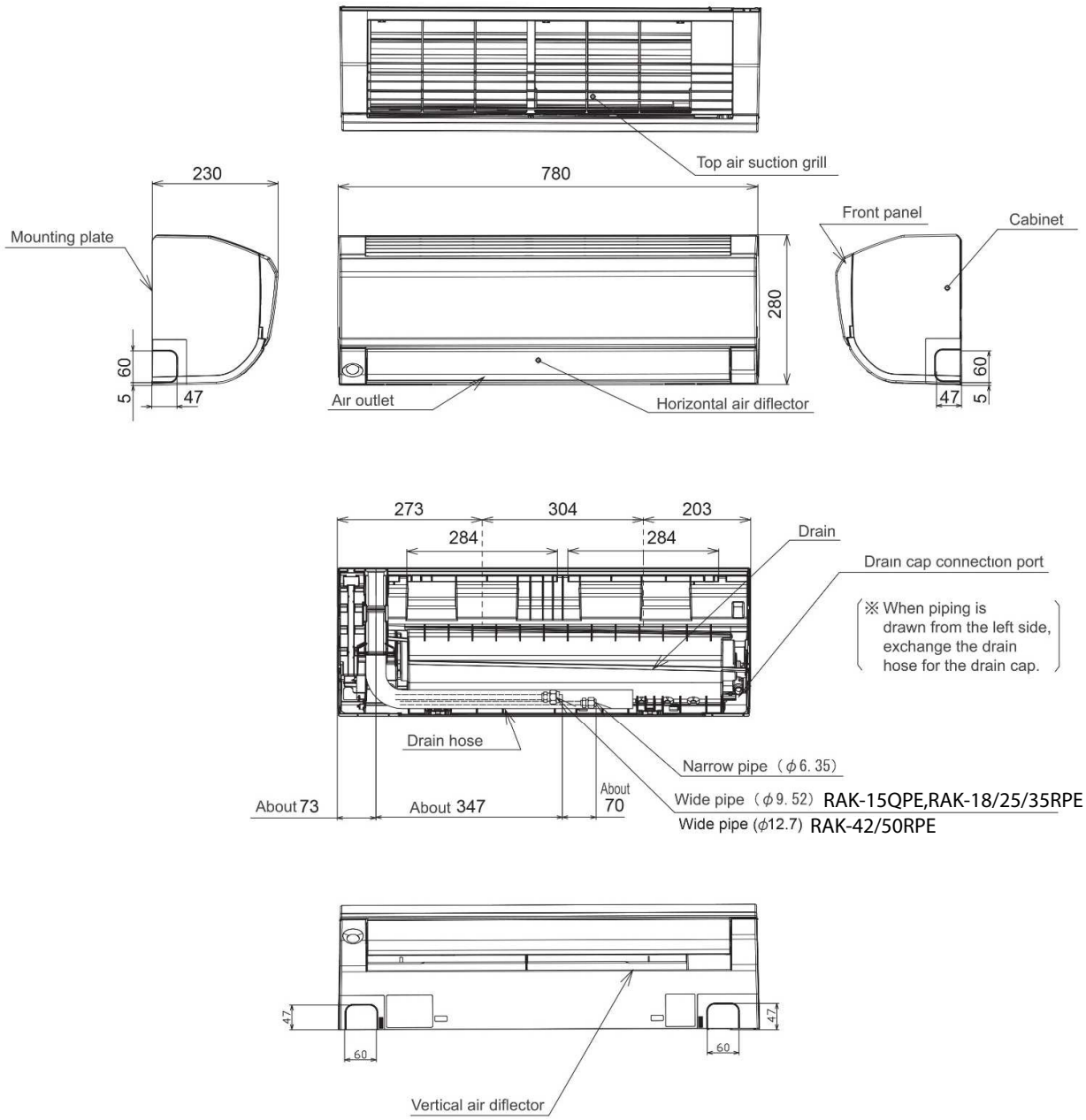

2.1.3. WALL TYPE: RAK-50RPE1 / 60RPE

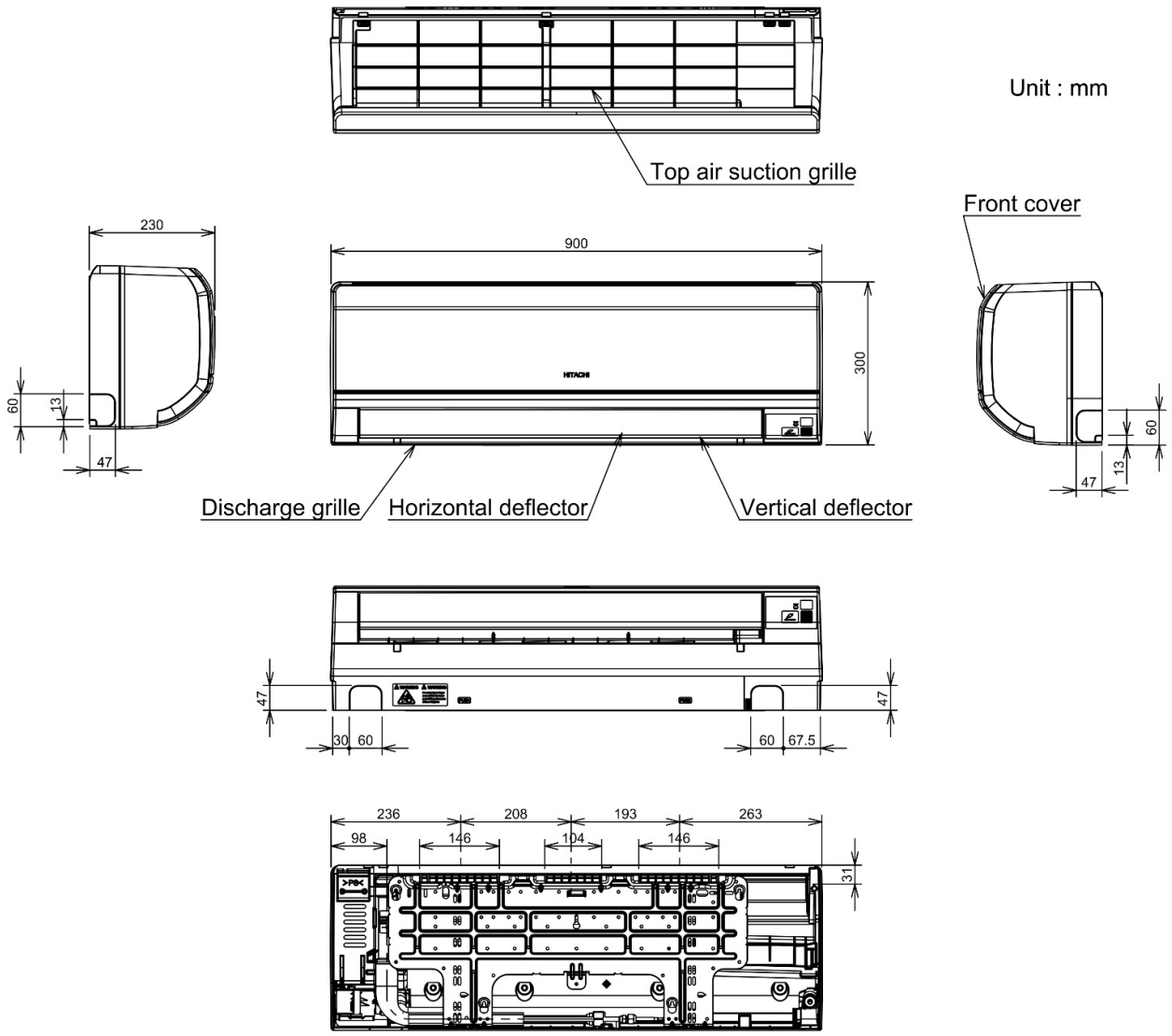

2.1.4. FLOOR TYPE: RAF-25RXE / 35RXE / 50RXE

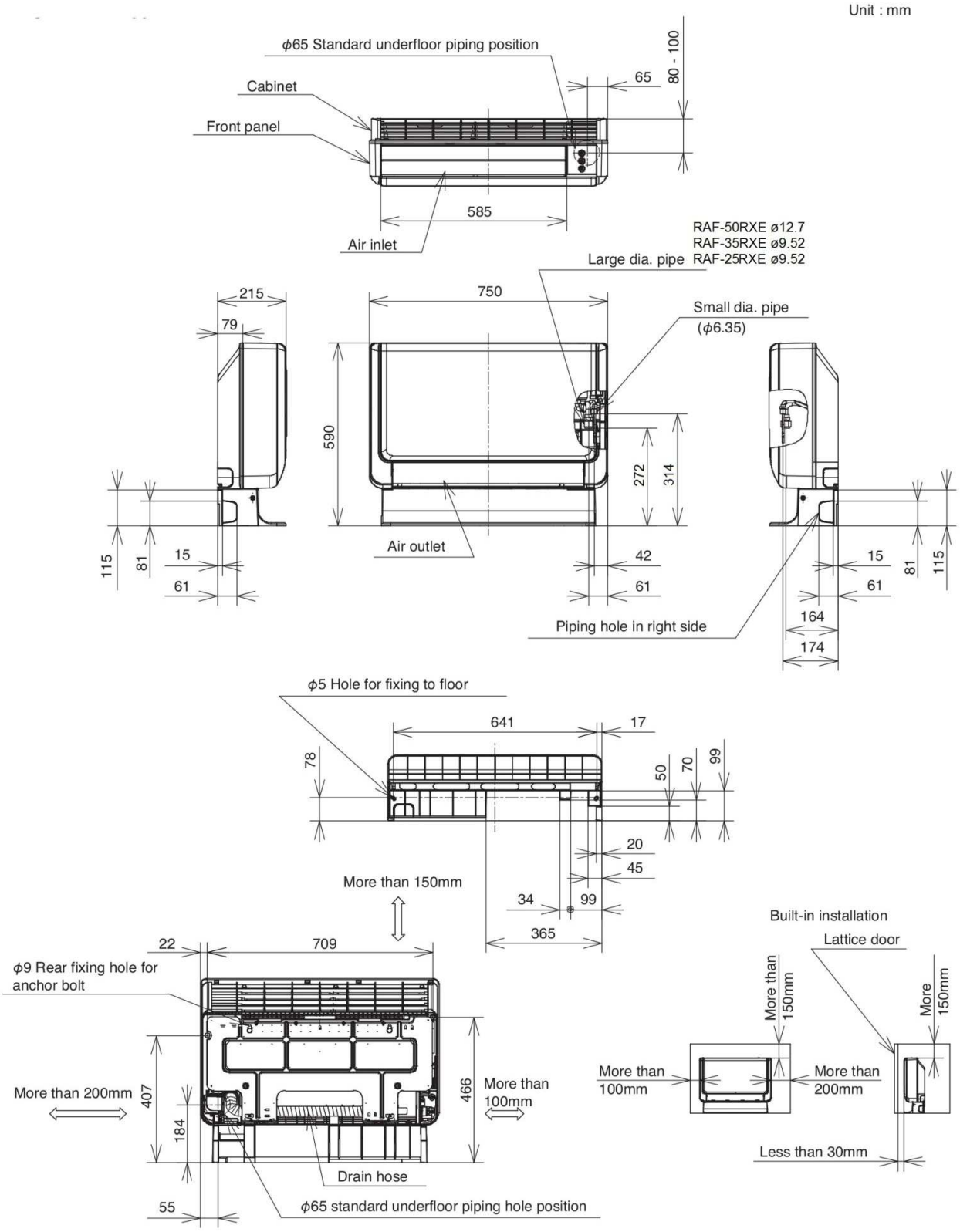

2.1.5. CEILING CASSETTE TYPE: RAI-25RPE / 35RPE / 50RPE / 60RPE / ECPP

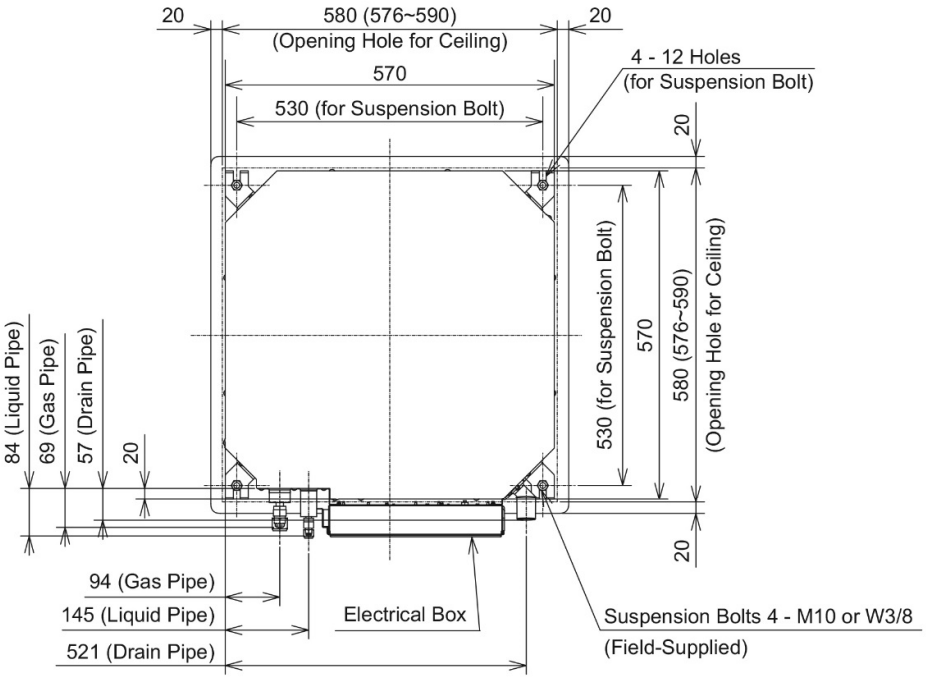

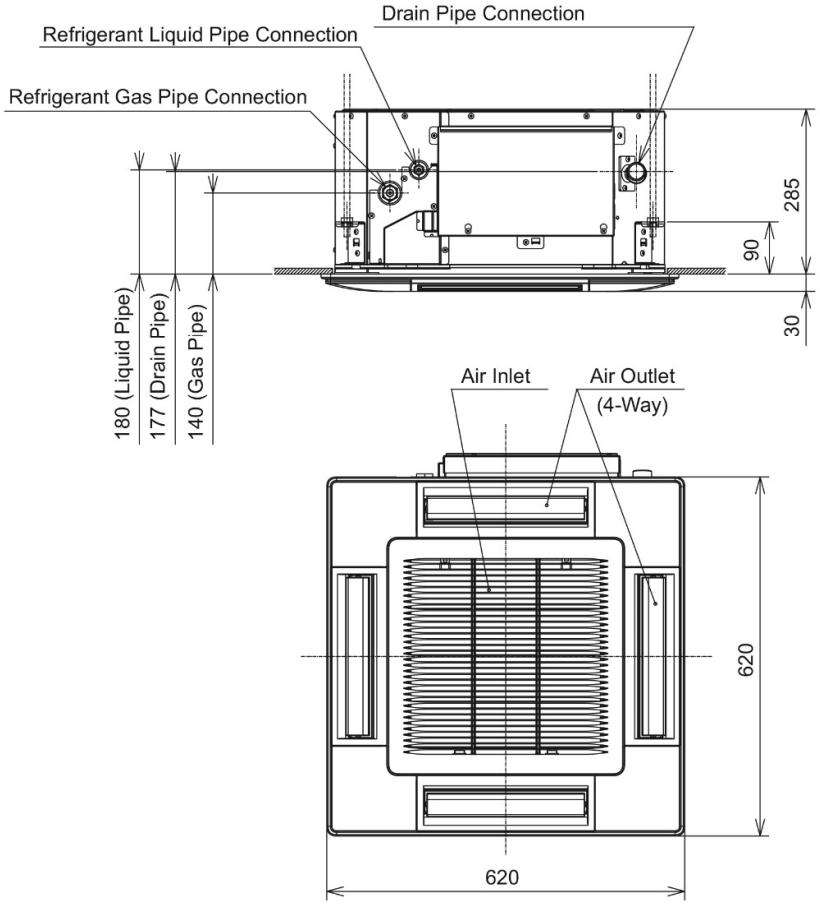

Unit: mm

2.1.6. DUCT TYPE: RAD-18QPE / 25RPE / 35RPE

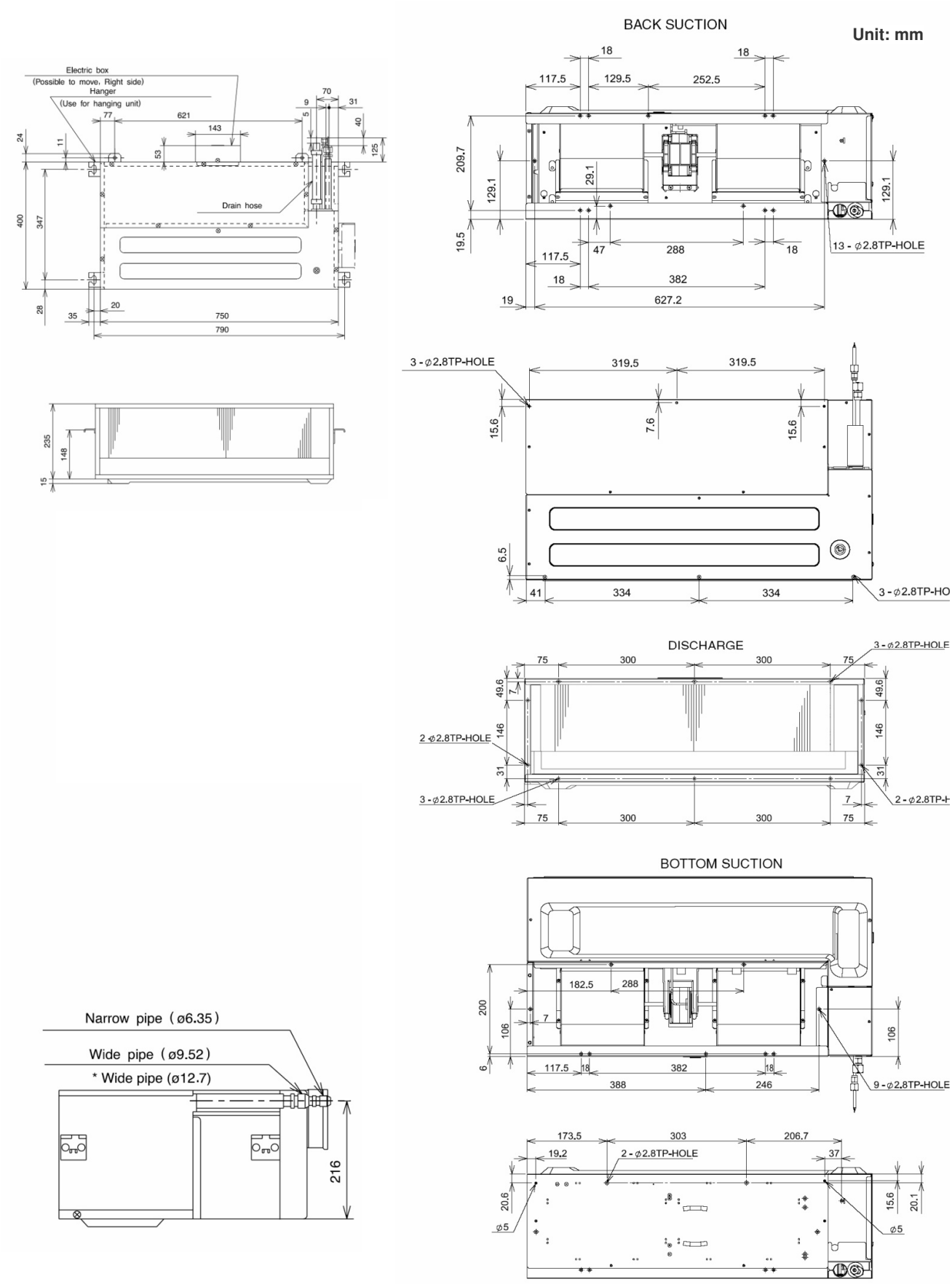

2.1.7. DUCT TYPE: RAD-50RPE / 60RPE

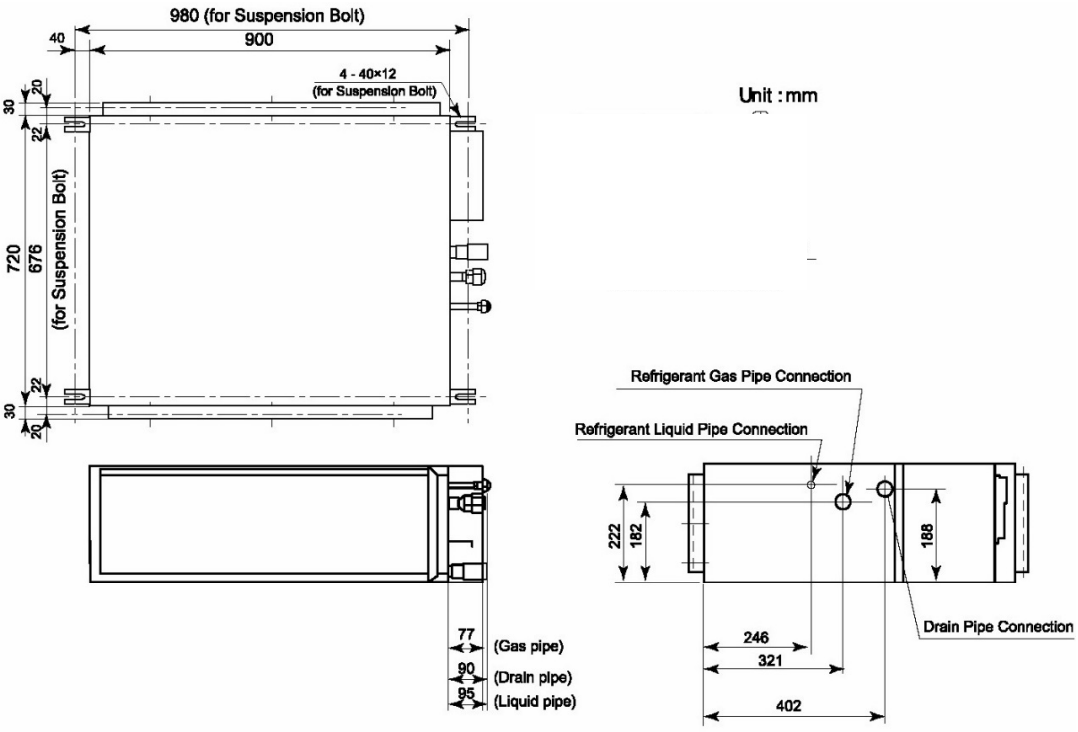

SIDE VIEW

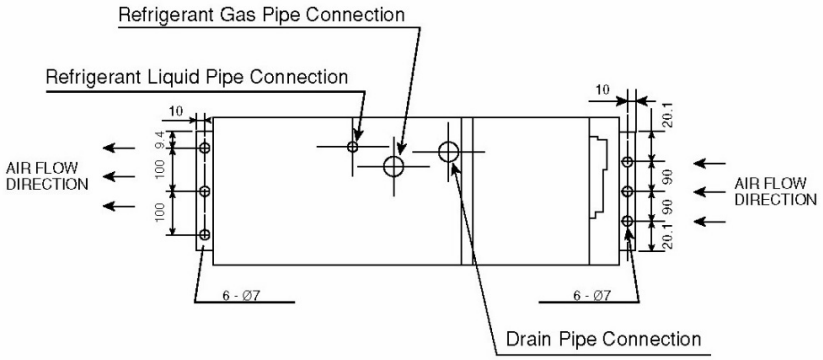

TOP VIEW

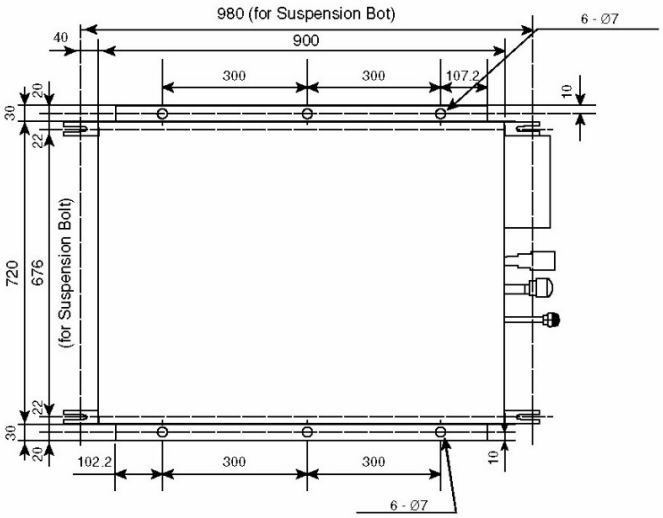

2.2.1. 5 ROOMS MULTIZONE: RAM-110NP5E

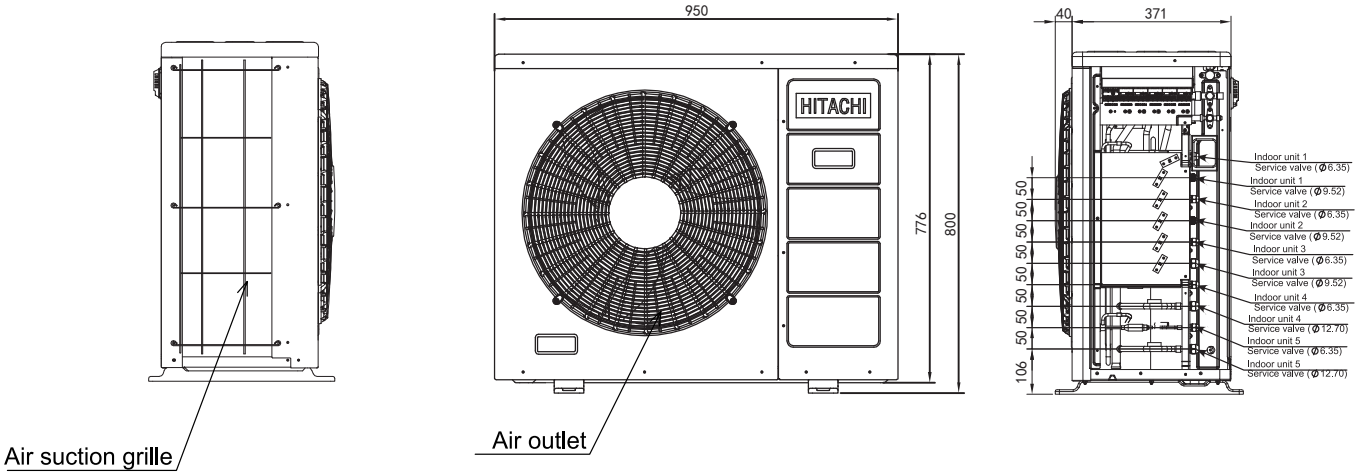

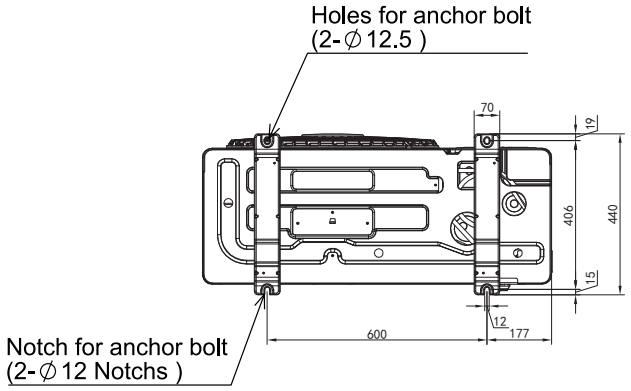

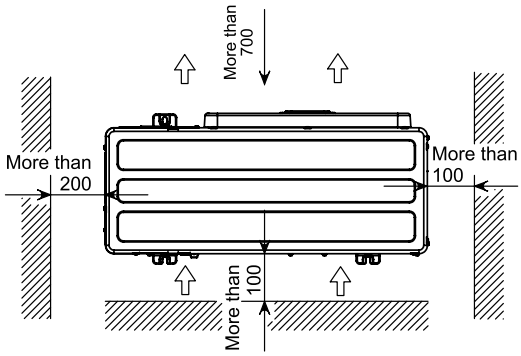

Service space

3 CAPACITIES AND SELECTION DATA

CONTENTS

3 CAPACITIES AND SELECTION DATA 3-1
3.1. SYSTEM SELECTION PROCEDURE 3-2
3.1.1. SELECTION UNIT FEATURES 3-2
3.1.2. SELECTION GUIDE 3-2
3.1.3. MULTIZONE COMBINATION SELECTION 3-3
3.2. CAPACITY CHARACTERISTIC CURVES FOR MULTIZONE 3-13
3.2.1. RAM-110NP5E 3-13
3.3. CORRECTION FACTORS ACCORDING TO PIPING LENGTH 3-135
3.4. CORRECTION FACTORS ACCORDING TO DEFROSTING OPERATION 3-137
3.5. COMBINATION TABLE FOR MULTIZONE OUTDOOR 3-138
3.5.1. RAM-110NP5E 3-138

3.1. SYSTEM SELECTION PROCEDURE

The following system procedure is giving a sample regarding unit selection system, indicating how to use all parameters showed in this chapter.

3.1.1. SELECTION UNIT FEATURES

Considering the building distribution, the possible indoor unit position and the available air flow distribution, select the unit features that are giving the best efficiency and comfort to each room.
Decide the Outdoor Unit position getting easy service maintenance and easy refrigerant pipe installation.

Therefore, the maximum indoor unit capacity combined with outdoor unit should be carefully considered for correct indoor unit distribution at each building

3.1.2. SELECTION GUIDE

The following guide giving the method for indoor and outdoor unit selection.

* **Step 1: Determine the system requirements**

Calculate the cooling capacity and heating capacity of each indoor unit according to the following conditions:

Total Load for each room

		Room			
Item		1	2	3	1+2+3
Estimated Cooling Load	kW	2.75	4.24	5.35	12.34
Estimated Heating Load	kW	2.90	4.60	6.00	13.50

*Example

Temperature Condition

Cooling	Heating
Outdoor Air Inlet • Dry Bulb: 35.0ºC	Outdoor Air Inlet • Dry Bulb: 7ºC • Wet Bulb: 0ºC
Indoor Air Inlet • Dry Bulb: 27,0ºC • Wet Bulb: 19.0ºC	Indoor Air Inlet • Dry Bulb: 20ºC

*Example

* **Step 2**: **Select Unit Capacity Performance**

The unit kW is selected following the Cooling capacity and Heating capacity showed in the combination table.

* **Step 3**: **Read Selected Capacity Performance**

The unit performance should be calculated considering the following correction factors:

1. Cooling and Heating piping length
2. Outdoor unit performance capacity
3. Indoor unit performance capacity for each room cooling load

Kindly refer to the unit selection combination table for correct capacity performance.

3.1.3. MULTIZONE COMBINATION SELECTION

Type								Pentad
Model Name								RAM-110NP5E
Product Image								
Combination							Total	
ONE UNIT	1.5						1.5	
	1.8						1.8	
	2.5						2.5	
	4.2						4.2	
	3.5						3.5	
	5.0						5.0	
	6.0						6.0	
TWO UNITS	1.5	1.5					3.0	★
	1.5	1.8					3.3	★
	1.5	2.5					4.0	★
	1.5	3.5					5.0	★
	1.5	4.2					5.7	★
	1.5	5.0					6.5	★
	1.5	6.0					7.5	★
	1.8	1.8					3.6	★
	1.8	2.5					4.3	★
	1.8	3.5					5.3	★
	1.8	4.2					6.0	★
	1.8	5.0					6.8	★
	1.8	6.0					7.8	★
	2.5	2.5					5.0	★
	2.5	3.5					6.0	★
	2.5	4.2					6.7	★
	2.5	5.0					7.5	★
	2.5	6.0					8.5	★
	3.5	3.5					7.0	★
	3.5	4.2					7.7	★
	3.5	5.0					8.5	★
	3.5	6.0					9.5	★
	4.2	4.2					8.4	★
	4.2	5.0					9.2	★
	4.2	6.0					10.2	★
	5.0	5.0					10.0	★
	5.0	6.0					11.0	★
	6.0	6.0					12.0	★

Type								Pentad
Model Name								RAM-110NP5E
Product Image								
Combination							Total	
THREE UNITS	1.5	1.5	1.5				4.5	★
	1.5	1.5	1.8				4.8	★
	1.5	1.5	2.5				5.5	★
	1.5	1.5	3.5				6.5	★
	1.5	1.5	4.2				7.2	★
	1.5	1.5	5.0				8.0	★
	1.5	1.5	6.0				9.0	★
	1.5	1.8	1.8				5.1	★
	1.5	1.8	2.5				5.8	★
	1.5	1.8	3.5				6.8	★
	1.5	1.8	4.2				7.5	★
	1.5	1.8	5.0				8.3	★
	1.5	1.8	6.0				9.3	★
	1.5	2.5	2.5				6.5	★
	1.5	2.5	3.5				7.5	★
	1.5	2.5	4.2				8.2	★
	1.5	2.5	5.0				9.0	★
	1.5	2.5	6.0				10.0	★
	1.5	3.5	3.5				8.5	★
	1.5	3.5	4.2				9.2	★
	1.5	3.5	5.0				10.0	★
	1.5	3.5	6.0				11.0	★
	1.5	4.2	4.2				9.9	★
	1.5	4.2	5.0				10.7	★
	1.5	4.2	6.0				11.7	★
	1.5	5.0	5.0				11.5	★
	1.5	5.0	6.0				12.5	★
	1.5	6.0	6.0				13.5	★
	1.8	1.8	1.8				5.4	★
	1.8	1.8	2.5				6.1	★
	1.8	1.8	3.5				7.1	★
	1.8	1.8	4.2				7.8	★
	1.8	1.8	5.0				8.6	★
	1.8	1.8	6.0				9.6	★
	1.8	2.5	2.5				6.8	★
	1.8	2.5	3.5				7.8	★
	1.8	2.5	4.2				8.5	★
	1.8	2.5	5.0				9.3	★
	1.8	2.5	6.0				10.3	★
	1.8	3.5	3.5				8.8	★
	1.8	3.5	4.2				9.5	★
	1.8	3.5	5.0				10.3	★
	1.8	3.5	6.0				11.3	★

	1.8	4.2	4.2				10.2	★
	1.8	4.2	5.0				11.0	★
	1.8	4.2	6.0				12.0	★
	1.8	5.0	5.0				11.8	★
	1.8	5.0	6.0				12.8	★
	1.8	6.0	6.0				13.8	★
	2.5	2.5	2.5				7.5	★
	2.5	2.5	3.5				8.5	★
	2.5	2.5	4.2				9.2	★
	2.5	2.5	5.0				10.0	★
	2.5	2.5	6.0				11.0	★
	2.5	3.5	3.5				9.5	★
	2.5	3.5	4.2				10.2	★
	2.5	3.5	5.0				11.0	★
	2.5	3.5	6.0				12.0	★
	2.5	4.2	4.2				10.9	★
	2.5	4.2	5.0				11.7	★
	2.5	4.2	6.0				12.7	★
	2.5	5.0	5.0				12.5	★
	2.5	5.0	6.0				13.5	★
	2.5	6.0	6.0				14.5	★
	3.5	3.5	3.5				10.5	★
	3.5	3.5	4.2				11.2	★
	3.5	3.5	5.0				12.0	★
	3.5	3.5	6.0				13.0	★
	3.5	4.2	4.2				11.9	★
	3.5	4.2	5.0				12.7	★
	3.5	4.2	6.0				13.7	★
	3.5	5.0	5.0				13.5	★
	3.5	5.0	6.0				14.5	★
	3.5	6.0	6.0				15.5	★
	4.2	4.2	4.2				12.6	★
	4.2	4.2	5.0				13.4	★
	4.2	4.2	6.0				14.4	★
	4.2	5.0	5.0				14.2	★
	4.2	5.0	6.0				15.2	★
	5.0	5.0	5.0				15.0	★
	5.0	5.0	6.0				16.0	★

Type								Pentad
Model Name								RAM-110NP5E
Product Image								
Combination							Total	
FOUR UNITS	1.5	1.5	1.5	1.5			6.0	★
	1.5	1.5	1.5	1.8			6.3	★
	1.5	1.5	1.5	2.5			7.0	★
	1.5	1.5	1.5	3.5			8.0	★
	1.5	1.5	1.5	4.2			8.7	★
	1.5	1.5	1.5	5.0			9.5	★
	1.5	1.5	1.5	6.0			10.5	★
	1.5	1.5	1.8	1.8			6.6	★
	1.5	1.5	1.8	2.5			7.3	★
	1.5	1.5	1.8	3.5			8.3	★
	1.5	1.5	1.8	4.2			9.0	★
	1.5	1.5	1.8	5.0			9.8	★
	1.5	1.5	1.8	6.0			10.8	★
	1.5	1.5	2.5	2.5			8.0	★
	1.5	1.5	2.5	3.5			9.0	★
	1.5	1.5	2.5	4.2			9.7	★
	1.5	1.5	2.5	5.0			10.5	★
	1.5	1.5	2.5	6.0			11.5	★
	1.5	1.5	3.5	3.5			10.0	★
	1.5	1.5	3.5	4.2			10.7	★
	1.5	1.5	3.5	5.0			11.5	★
	1.5	1.5	3.5	6.0			12.5	★
	1.5	1.5	4.2	4.2			11.4	★
	1.5	1.5	4.2	5.0			12.2	★
	1.5	1.5	4.2	6.0			13.2	★
	1.5	1.5	5.0	5.0			13.0	★
	1.5	1.5	5.0	6.0			14.0	★
	1.5	1.5	6.0	6.0			15.0	★
	1.5	1.8	1.8	1.8			6.9	★
	1.5	1.8	1.8	2.5			7.6	★
	1.5	1.8	1.8	3.5			8.6	★
	1.5	1.8	1.8	4.2			9.3	★
	1.5	1.8	1.8	5.0			10.1	★
	1.5	1.8	1.8	6.0			11.1	★
	1.5	1.8	2.5	2.5			8.3	★
	1.5	1.8	2.5	3.5			9.3	★
	1.5	1.8	2.5	4.2			10.0	★
	1.5	1.8	2.5	5.0			10.8	★
	1.5	1.8	2.5	6.0			11.8	★
	1.5	1.8	3.5	3.5			10.3	★
	1.5	1.8	3.5	4.2			11.0	★
	1.5	1.8	3.5	5.0			11.8	★
	1.5	1.8	3.5	6.0			12.8	★

	1.5	1.8	4.2	4.2			11.7	★
	1.5	1.8	4.2	5.0			12.5	★
	1.5	1.8	4.2	6.0			13.5	★
	1.5	1.8	5.0	5.0			13.3	★
	1.5	1.8	5.0	6.0			14.3	★
	1.5	1.8	6.0	6.0			15.3	★
	1.5	2.5	2.5	2.5			9.0	★
	1.5	2.5	2.5	3.5			10.0	★
	1.5	2.5	2.5	4.2			10.7	★
	1.5	2.5	2.5	5.0			11.5	★
	1.5	2.5	2.5	6.0			12.5	★
	1.5	2.5	3.5	3.5			11.0	★
	1.5	2.5	3.5	4.2			11.7	★
	1.5	2.5	3.5	5.0			12.5	★
	1.5	2.5	3.5	6.0			13.5	★
	1.5	2.5	4.2	4.2			12.4	★
	1.5	2.5	4.2	5.0			13.2	★
	1.5	2.5	4.2	6.0			14.2	★
	1.5	2.5	5.0	5.0			14.0	★
	1.5	2.5	5.0	6.0			15.0	★
	1.5	3.5	3.5	3.5			12.0	★
	1.5	3.5	3.5	4.2			12.7	★
	1.5	3.5	3.5	5.0			13.5	★
	1.5	3.5	3.5	6.0			14.5	★
	1.5	3.5	4.2	4.2			13.4	★
	1.5	3.5	4.2	5.0			14.2	★
	1.5	3.5	4.2	6.0			15.2	★
	1.5	3.5	5.0	5.0			15.0	★
	1.5	3.5	5.0	6.0			16.0	★
	1.5	4.2	4.2	4.2			14.1	★
	1.5	4.2	4.2	5.0			14.9	★
	1.5	4.2	4.2	6.0			15.9	★
	1.5	4.2	5.0	5.0			15.7	★
	1.8	1.8	1.8	1.8			7.2	★
	1.8	1.8	1.8	2.5			7.9	★
	1.8	1.8	1.8	3.5			8.9	★
	1.8	1.8	1.8	4.2			9.6	★
	1.8	1.8	1.8	5.0			10.4	★
	1.8	1.8	1.8	6.0			11.4	★
	1.8	1.8	2.5	2.5			8.6	★
	1.8	1.8	2.5	3.5			9.6	★
	1.8	1.8	2.5	4.2			10.3	★
	1.8	1.8	2.5	5.0			11.1	★
	1.8	1.8	2.5	6.0			12.1	★
	1.8	1.8	3.5	3.5			10.6	★
	1.8	1.8	3.5	4.2			11.3	★
	1.8	1.8	3.5	5.0			12.1	★
	1.8	1.8	3.5	6.0			13.1	★
	1.8	1.8	4.2	4.2			12.0	★
	1.8	1.8	4.2	5.0			12.8	★
	1.8	1.8	4.2	6.0			13.8	★
	1.8	1.8	5.0	5.0			13.6	★
	1.8	1.8	5.0	6.0			14.6	★
	1.8	1.8	6.0	6.0			15.6	★

	1.8	2.5	2.5	2.5			9.3	★
	1.8	2.5	2.5	3.5			10.3	★
	1.8	2.5	2.5	4.2			11.0	★
	1.8	2.5	2.5	5.0			11.8	★
	1.8	2.5	2.5	6.0			12.8	★
	1.8	2.5	3.5	3.5			11.3	★
	1.8	2.5	3.5	4.2			12.0	★
	1.8	2.5	3.5	5.0			12.8	★
	1.8	2.5	3.5	6.0			13.8	★
	1.8	2.5	4.2	4.2			12.7	★
	1.8	2.5	4.2	5.0			13.5	★
	1.8	2.5	4.2	6.0			14.5	★
	1.8	2.5	5.0	5.0			14.3	★
	1.8	2.5	5.0	6.0			15.3	★
	1.8	2.5	6.0	6.0			16.3	★
	1.8	3.5	3.5	3.5			12.3	★
	1.8	3.5	3.5	4.2			13.0	★
	1.8	3.5	3.5	5.0			13.8	★
	1.8	3.5	3.5	6.0			14.8	★
	1.8	3.5	4.2	4.2			13.7	★
	1.8	3.5	4.2	5.0			14.5	★
	1.8	3.5	4.2	6.0			15.5	★
	1.8	3.5	5.0	5.0			15.3	★
	1.8	3.5	5.0	6.0			16.3	★
	1.8	4.2	4.2	4.2			14.4	★
	1.8	4.2	4.2	5.0			15.2	★
	1.8	4.2	4.2	6.0			16.2	★
	1.8	4.2	5.0	5.0			16.0	★
	2.5	2.5	2.5	2.5			10.0	★
	2.5	2.5	2.5	3.5			11.0	★
	2.5	2.5	2.5	4.2			11.7	★
	2.5	2.5	2.5	5.0			12.5	★
	2.5	2.5	2.5	6.0			13.5	★
	2.5	2.5	3.5	3.5			12.0	★
	2.5	2.5	3.5	4.2			12.7	★
	2.5	2.5	3.5	5.0			13.5	★
	2.5	2.5	3.5	6.0			14.5	★
	2.5	2.5	4.2	4.2			13.4	★
	2.5	2.5	4.2	5.0			14.2	★
	2.5	2.5	4.2	6.0			15.2	★
	2.5	2.5	5.0	5.0			15.0	★
	2.5	2.5	5.0	6.0			16.0	★
	2.5	3.5	3.5	3.5			13.0	★
	2.5	3.5	3.5	4.2			13.7	★
	2.5	3.5	3.5	5.0			14.5	★
	2.5	3.5	3.5	6.0			15.5	★
	2.5	3.5	4.2	4.2			14.4	★
	2.5	3.5	4.2	5.0			15.2	★
	2.5	3.5	4.2	6.0			16.2	★
	2.5	3.5	5.0	5.0			16.0	★
	3.5	3.5	3.5	3.5			14.0	★
	3.5	3.5	3.5	4.2			14.7	★
	3.5	3.5	3.5	5.0			15.5	★
	3.5	3.5	4.2	4.2			15.4	★
	3.5	3.5	3.5	6.0			16.5	★
	3.5	3.5	4.2	5.0			16.2	★

Type								Pentad
Model Name								RAM-110NP5E
Product Image								
Combination							Total	
FIVE UNITS	1.5	1.5	1.5	1.5	1.5		7.5	★
	1.5	1.5	1.5	1.5	1.8		7.8	★
	1.5	1.5	1.5	1.5	2.5		8.5	★
	1.5	1.5	1.5	1.5	3.5		9.5	★
	1.5	1.5	1.5	1.5	4.2		10.2	★
	1.5	1.5	1.5	1.5	5.0		11.0	★
	1.5	1.5	1.5	1.5	6.0		12.0	★
	1.5	1.5	1.5	1.8	1.8		8.1	★
	1.5	1.5	1.5	1.8	2.5		8.8	★
	1.5	1.5	1.5	1.8	3.5		9.8	★
	1.5	1.5	1.5	1.8	4.2		10.5	★
	1.5	1.5	1.5	1.8	5.0		11.3	★
	1.5	1.5	1.5	1.8	6.0		12.3	★
	1.5	1.5	1.5	2.5	2.5		9.5	★
	1.5	1.5	1.5	2.5	3.5		10.5	★
	1.5	1.5	1.5	2.5	4.2		11.2	★
	1.5	1.5	1.5	2.5	5.0		12.0	★
	1.5	1.5	1.5	2.5	6.0		13.0	★
	1.5	1.5	1.5	3.5	3.5		11.5	★
	1.5	1.5	1.5	3.5	4.2		12.2	★
	1.5	1.5	1.5	3.5	5.0		13.0	★
	1.5	1.5	1.5	3.5	6.0		14.0	★
	1.5	1.5	1.5	4.2	4.2		12.9	★
	1.5	1.5	1.5	4.2	5.0		13.7	★
	1.5	1.5	1.5	4.2	6.0		14.7	★
	1.5	1.5	1.5	5.0	5.0		14.5	★
	1.5	1.5	1.5	5.0	6.0		15.5	★
	1.5	1.5	1.8	1.8	1.8		8.4	★
	1.5	1.5	1.8	1.8	2.5		9.1	★
	1.5	1.5	1.8	1.8	3.5		10.1	★
	1.5	1.5	1.8	1.8	4.2		10.8	★
	1.5	1.5	1.8	1.8	5.0		11.6	★
	1.5	1.5	1.8	1.8	6.0		12.6	★
	1.5	1.5	1.8	2.5	2.5		9.8	★
	1.5	1.5	1.8	2.5	3.5		10.8	★
	1.5	1.5	1.8	2.5	4.2		11.5	★
	1.5	1.5	1.8	2.5	5.0		12.3	★
	1.5	1.5	1.8	2.5	6.0		13.3	★
	1.5	1.5	1.8	3.5	3.5		11.8	★
	1.5	1.5	1.8	3.5	4.2		12.5	★
	1.5	1.5	1.8	3.5	5.0		13.3	★
	1.5	1.5	1.8	3.5	6.0		14.3	★
	1.5	1.5	1.8	4.2	4.2		13.2	★
	1.5	1.5	1.8	4.2	5.0		14.0	★

1.5	1.5	1.8	4.2	6.0		15.0	★
1.5	1.5	1.8	5.0	5.0		14.8	★
1.5	1.5	1.8	5.0	6.0		15.8	★
1.5	1.5	2.5	2.5	2.5		10.5	★
1.5	1.5	2.5	2.5	3.5		11.5	★
1.5	1.5	2.5	2.5	4.2		12.2	★
1.5	1.5	2.5	2.5	5.0		13.0	★
1.5	1.5	2.5	2.5	6.0		14.0	★
1.5	1.5	2.5	3.5	3.5		12.5	★
1.5	1.5	2.5	3.5	4.2		13.2	★
1.5	1.5	2.5	3.5	5.0		14.0	★
1.5	1.5	2.5	3.5	6.0		15.0	★
1.5	1.5	2.5	4.2	4.2		13.9	★
1.5	1.5	2.5	4.2	5.0		14.7	★
1.5	1.5	2.5	5.0	5.0		15.5	★
1.5	1.5	2.5	5.0	6.0		16.5	★
1.5	1.5	3.5	3.5	3.5		13.5	★
1.5	1.5	3.5	3.5	4.2		14.2	★
1.5	1.5	3.5	3.5	5.0		15.0	★
1.5	1.5	3.5	3.5	6.0		16.0	★
1.5	1.8	1.8	1.8	1.8		8.7	★
1.5	1.8	1.8	1.8	2.5		9.4	★
1.5	1.8	1.8	1.8	3.5		10.4	★
1.5	1.8	1.8	1.8	4.2		11.1	★
1.5	1.8	1.8	1.8	5.0		11.9	★
1.5	1.8	1.8	1.8	6.0		12.9	★
1.5	1.8	1.8	2.5	2.5		10.1	★
1.5	1.8	1.8	2.5	3.5		11.1	★
1.5	1.8	1.8	2.5	4.2		11.8	★
1.5	1.8	1.8	2.5	5.0		12.6	★
1.5	1.8	1.8	2.5	6.0		13.6	★
1.5	1.8	1.8	3.5	3.5		12.1	★
1.5	1.8	1.8	3.5	4.2		12.8	★
1.5	1.8	1.8	3.5	5.0		13.6	★
1.5	1.8	1.8	3.5	6.0		14.6	★
1.5	1.8	1.8	4.2	4.2		13.5	★
1.5	1.8	1.8	4.2	5.0		14.3	★
1.5	1.8	1.8	4.2	6.0		15.3	★
1.5	1.8	1.8	5.0	5.0		15.1	★
1.5	1.8	1.8	5.0	6.0		16.1	★
1.5	1.8	2.5	2.5	2.5		10.8	★
1.5	1.8	2.5	2.5	3.5		11.8	★
1.5	1.8	2.5	2.5	4.2		12.5	★
1.5	1.8	2.5	2.5	5.0		13.3	★
1.5	1.8	2.5	2.5	6.0		14.3	★
1.5	1.8	2.5	3.5	3.5		12.8	★
1.5	1.8	2.5	3.5	4.2		13.5	★
1.5	1.8	2.5	3.5	5.0		14.3	★
1.5	1.8	2.5	3.5	6.0		15.3	★
1.5	1.8	2.5	4.2	4.2		14.2	★
1.5	1.8	2.5	4.2	5.0		15.0	★
1.5	1.8	2.5	4.2	6.0		16.0	★
1.5	1.8	3.5	3.5	3.5		13.8	★
1.5	1.8	3.5	3.5	4.2		14.5	★

1.5	1.8	3.5	3.5	5.0		15.3	★
1.5	1.8	3.5	4.2	4.2		15.2	★
1.5	2.5	2.5	2.5	2.5		11.5	★
1.5	2.5	2.5	2.5	3.5		12.5	★
1.5	2.5	2.5	2.5	4.2		13.2	★
1.5	2.5	2.5	2.5	5.0		14.0	★
1.5	2.5	2.5	2.5	6.0		15.0	★
1.5	2.5	2.5	3.5	3.5		13.5	★
1.5	2.5	2.5	3.5	4.2		14.2	★
1.5	2.5	2.5	3.5	5.0		15.0	★
1.5	2.5	2.5	3.5	6.0		16.0	★
1.5	2.5	2.5	4.2	4.2		14.9	★
1.5	2.5	2.5	4.2	5.0		15.7	★
1.5	2.5	2.5	5.0	5.0		16.5	★
1.5	2.5	3.5	3.5	3.5		14.5	★
1.5	2.5	3.5	3.5	4.2		15.2	★
1.5	2.5	3.5	3.5	5.0		16.0	★
1.5	2.5	3.5	4.2	4.2		15.9	★
1.8	1.8	1.8	1.8	1.8		9.0	★
1.8	1.8	1.8	1.8	2.5		9.7	★
1.8	1.8	1.8	1.8	3.5		10.7	★
1.8	1.8	1.8	1.8	4.2		11.4	★
1.8	1.8	1.8	1.8	5.0		12.2	★
1.8	1.8	1.8	1.8	6.0		13.2	★
1.8	1.8	1.8	2.5	2.5		10.4	★
1.8	1.8	1.8	2.5	3.5		11.4	★
1.8	1.8	1.8	2.5	4.2		12.1	★
1.8	1.8	1.8	2.5	5.0		12.9	★
1.8	1.8	1.8	2.5	6.0		13.9	★
1.8	1.8	1.8	3.5	3.5		12.4	★
1.8	1.8	1.8	3.5	4.2		13.1	★
1.8	1.8	1.8	3.5	5.0		13.9	★
1.8	1.8	1.8	3.5	6.0		14.9	★
1.8	1.8	1.8	4.2	4.2		13.8	★
1.8	1.8	1.8	4.2	5.0		14.6	★
1.8	1.8	1.8	4.2	6.0		15.6	★
1.8	1.8	1.8	5.0	5.0		15.4	★
1.8	1.8	1.8	5.0	6.0		16.4	★
1.8	1.8	2.5	2.5	2.5		11.1	★
1.8	1.8	2.5	2.5	3.5		12.1	★
1.8	1.8	2.5	2.5	4.2		12.8	★
1.8	1.8	2.5	2.5	5.0		13.6	★
1.8	1.8	2.5	2.5	6.0		14.6	★
1.8	1.8	2.5	3.5	3.5		13.1	★
1.8	1.8	2.5	3.5	4.2		13.8	★
1.8	1.8	2.5	3.5	5.0		14.6	★
1.8	1.8	2.5	4.2	4.2		14.5	★
1.8	1.8	2.5	4.2	5.0		15.3	★
1.8	1.8	2.5	4.2	6.0		16.3	★
1.8	1.8	2.5	5.0	5.0		16.1	★
1.8	1.8	3.5	3.5	3.5		14.1	★
1.8	1.8	3.5	3.5	4.2		14.8	★
1.8	1.8	3.5	3.5	5.0		15.6	★
1.8	1.8	3.5	3.5	6.0		16.6	★
1.8	1.8	3.5	4.2	4.2		15.5	★
1.8	1.8	3.5	4.2	5.0		16.3	★
1.8	2.5	2.5	2.5	2.5		11.8	★
1.8	2.5	2.5	2.5	3.5		12.8	★
1.8	2.5	2.5	2.5	4.2		13.5	★
1.8	2.5	2.5	2.5	5.0		14.3	★
1.8	2.5	2.5	2.5	6.0		15.3	★

1.8	2.5	2.5	3.5	3.5		13.8	★
1.8	2.5	2.5	3.5	4.2		14.5	★
1.8	2.5	2.5	3.5	5.0		15.3	★
1.8	2.5	2.5	3.5	6.0		16.3	★
1.8	2.5	2.5	4.2	4.2		15.2	★
1.8	2.5	2.5	4.2	5.0		16.0	★
1.8	2.5	3.5	3.5	3.5		14.8	★
1.8	2.5	3.5	3.5	4.2		15.5	★
1.8	2.5	3.5	3.5	5.0		16.3	★
1.8	2.5	3.5	4.2	4.2		16.2	★
2.5	2.5	2.5	2.5	2.5		12.5	★
2.5	2.5	2.5	2.5	3.5		13.5	★
2.5	2.5	2.5	2.5	4.2		14.2	★
2.5	2.5	2.5	2.5	5.0		15.0	★
2.5	2.5	2.5	2.5	6.0		16.0	★
2.5	2.5	2.5	3.5	3.5		14.5	★
2.5	2.5	2.5	3.5	4.2		15.2	★
2.5	2.5	3.5	3.5	3.5		15.5	★
2.5	2.5	3.5	3.5	4.2		16.2	★

***At least 2 indoor should be connected to RAM-110NP5E**

3.2. CAPACITY CHARACTERISTIC CURVES FOR MULTIZONE

The following charts show the characteristics of outdoor unit capacity, which corresponds with the operating ambient temperature of outdoor unit.

Conditions:

①Pipe length / height difference : 5.0m / 0m

②Indoor fan speed at High mode

③Capacity loss due to white frost and defrost operation is not included.

3.2.1. RAM-110NP5E

COOLING [50Hz, 230V]

	INDOOR		OUTDOOR TEMPERATURE (°CDB)																				
	EWB	EDB	-10			21			27			32			35			40			43		
	°C	°C	TC	SHC	PI	TC	SHC	PI	TC	SHC	PI	TC	SHC	PI	TC	SHC	PI	TC	SHC	PI	TC	SHC	PI
RAM- 110NP5E	12	18	5073	3753	1164	6475	5586	1611	6567	5733	2052	8470	7356	2925	8215	7099	3025	7790	6777	3200	7535	6520	3300
	14	20	5073	3753	1164	6882	5586	1611	6975	5777	2069	8980	7356	2950	8725	7163	3050	8215	6777	3225	7960	6584	3350
	16	22	5073	3962	1180	7290	5586	1627	7324	5777	2085	9490	7356	2950	9235	7163	3100	8725	6777	3275	8470	6584	3375
	18	25	5403	4212	1195	7698	5983	1643	7674	6130	2102	10000	7871	3000	9660	7614	3100	9150	7228	3300	8810	6970	3400
	19	27	5569	4337	1210	7931	6247	1659	7906	6350	2119	10340	8193	3025	10000	7935	3096	9490	7549	3300	9150	7292	3400
	22	30	6119	4296	1210	8688	6203	1659	8605	6306	2119	11275	8129	3050	10935	7871	3150	10000	7678	3400	9405	7549	3550
	24	32	6505	4296	1225	9212	6203	1674	9071	6306	2136	11955	8129	3050	11530	7871	3175	10340	7807	3475	9575	7742	3650
1.5	12	18	807	574	162	966	809	203	894	747	240	1230	1033	386	1185	988	403	1110	931	433	1065	886	449
	14	20	807	574	162	1038	809	203	966	755	243	1320	1033	391	1275	999	407	1185	931	437	1140	897	458
	16	22	807	611	165	1110	809	206	1028	755	245	1410	1033	395	1365	999	416	1275	931	445	1230	897	462
	18	25	865	655	167	1182	879	209	1089	817	248	1500	1124	399	1440	1079	416	1350	1011	449	1290	965	466
	19	27	894	677	170	1223	926	211	1131	856	251	1560	1181	403	1500	1136	420	1410	1068	449	1350	1022	466
	22	30	992	670	170	1357	918	211	1254	848	251	1725	1170	407	1665	1124	424	1500	1090	466	1395	1068	491
	24	32	1060	670	172	1449	918	214	1336	848	254	1845	1170	407	1770	1124	428	1560	1113	479	1425	1102	508
1.8	12	18	968	689	193	1159	971	242	1073	896	285	1476	1240	460	1422	1186	480	1332	1118	515	1278	1063	535
	14	20	968	689	193	1246	971	242	1159	906	289	1584	1240	465	1530	1199	485	1422	1118	520	1368	1077	545
	16	22	968	733	196	1332	971	245	1233	906	292	1692	1240	470	1638	1199	495	1530	1118	530	1476	1077	550
	18	25	1038	786	199	1418	1055	249	1307	980	295	1800	1349	475	1728	1295	495	1620	1213	535	1548	1158	555
	19	27	1073	813	202	1468	1111	252	1357	1027	299	1872	1417	480	1800	1363	500	1692	1281	535	1620	1227	555
	22	30	1190	804	202	1628	1102	252	1505	1018	299	2070	1404	485	1998	1349	505	1800	1308	555	1674	1281	585
	24	32	1272	804	205	1739	1102	255	1603	1018	302	2214	1404	485	2124	1349	510	1872	1336	570	1710	1322	605
2.5	12	18	1345	957	270	1610	1349	339	1490	1245	400	2050	1722	644	1975	1647	672	1850	1552	721	1775	1476	749
	14	20	1345	957	270	1730	1349	339	1610	1258	404	2200	1722	651	2125	1666	679	1975	1552	728	1900	1495	763
	16	22	1345	1018	274	1850	1349	343	1713	1258	409	2350	1722	658	2275	1666	693	2125	1552	742	2050	1495	770
	18	25	1442	1092	278	1970	1466	348	1816	1362	414	2500	1874	665	2400	1798	693	2250	1685	749	2150	1609	777
	19	27	1491	1129	283	2038	1543	352	1884	1427	418	2600	1968	672	2500	1893	700	2350	1779	749	2250	1704	777
	22	30	1653	1116	283	2261	1530	352	2090	1414	418	2875	1950	679	2775	1874	707	2500	1817	777	2325	1779	819
	24	32	1766	1116	287	2415	1530	357	2227	1414	423	3075	1950	679	2950	1874	714	2600	1855	798	2375	1836	847

	12	18	1883	1340	401	2254	1888	504	2086	1743	594	2870	2411	957	2765	2305	998	2590	2173	1071	2485	2067	1113
	14	20	1883	1340	401	2422	1888	504	2254	1761	601	3080	2411	967	2975	2332	1009	2765	2173	1082	2660	2093	1134
	16	22	1883	1426	407	2590	1888	510	2398	1761	608	3290	2411	978	3185	2332	1030	2975	2173	1102	2870	2093	1144
3.5	18	25	2019	1529	414	2758	2052	517	2542	1906	615	3500	2623	988	3360	2517	1030	3150	2358	1113	3010	2252	1154
	19	27	2087	1580	420	2854	2161	524	2638	1997	622	3640	2756	998	3500	2650	1040	3290	2491	1113	3150	2385	1154
	22	30	2314	1563	420	3166	2142	524	2926	1979	622	4025	2729	1009	3885	2623	1050	3500	2544	1154	3255	2491	1217
	24	32	2473	1563	426	3381	2142	530	3118	1979	629	4305	2729	1009	4130	2623	1061	3640	2597	1186	3325	2570	1258
	12	18	2259	1608	482	2705	2266	605	2504	2092	713	3444	2894	1150	3318	2766	1200	3108	2608	1288	2982	2480	1338
	14	20	2259	1608	482	2907	2266	605	2705	2113	722	3696	2894	1163	3570	2798	1213	3318	2608	1300	3192	2512	1363
	16	22	2259	1711	490	3108	2266	613	2878	2113	730	3948	2894	1175	3822	2798	1238	3570	2608	1325	3444	2512	1375
4.2	18	25	2423	1834	497	3309	2462	621	3050	2288	739	4200	3148	1188	4032	3021	1238	3780	2830	1338	3612	2703	1388
	19	27	2504	1896	505	3425	2593	629	3166	2397	747	4368	3307	1200	4200	3180	1250	3948	2989	1338	3780	2862	1388
	22	30	2777	1876	505	3799	2571	629	3511	2375	747	4830	3275	1213	4662	3148	1263	4200	3053	1388	3906	2989	1463
	24	32	2967	1876	512	4058	2571	637	3741	2375	755	5166	3275	1213	4956	3148	1275	4368	3116	1425	3990	3084	1513
	12	18	2690	1914	594	3220	2698	746	2981	2490	879	4100	3445	1417	3950	3293	1478	3700	3104	1586	3550	2953	1648
	14	20	2690	1914	594	3460	2698	746	3220	2516	889	4400	3445	1432	4250	3331	1494	3950	3104	1602	3800	2991	1679
	16	22	2690	2036	603	3700	2698	756	3426	2516	900	4700	3445	1448	4550	3331	1525	4250	3104	1632	4100	2991	1694
5.0	18	25	2884	2184	613	3940	2931	765	3631	2724	910	5000	3748	1463	4800	3596	1525	4500	3369	1648	4300	3218	1709
	19	27	2981	2257	622	4077	3087	775	3769	2853	920	5200	3937	1478	5000	3786	1540	4700	3558	1648	4500	3407	1709
	22	30	3306	2233	622	4522	3061	775	4180	2827	920	5750	3899	1494	5550	3748	1555	5000	3634	1709	4650	3558	1802
	24	32	3532	2233	631	4831	3061	785	4454	2827	931	6150	3899	1494	5900	3748	1571	5200	3710	1756	4750	3672	1863
	12	18	3228	2297	629	3864	3237	789	3577	2988	930	4920	4134	1500	4740	3952	1565	4440	3725	1679	4260	3543	1744
	14	20	3228	2297	629	4152	3237	789	3864	3019	941	5280	4134	1516	5100	3998	1581	4740	3725	1695	4560	3589	1777
	16	22	3228	2444	639	4440	3237	800	4111	3019	952	5640	4134	1532	5460	3998	1614	5100	3725	1728	4920	3589	1793
6.0	18	25	3461	2620	648	4728	3517	810	4358	3268	963	6000	4497	1549	5760	4316	1614	5400	4043	1744	5160	3861	1809
	19	27	3578	2709	658	4892	3704	821	4522	3424	974	6240	4724	1565	6000	4543	1630	5640	4270	1744	5400	4088	1809
	22	30	3967	2679	658	5427	3673	821	5016	3393	974	6900	4679	1581	6660	4497	1646	6000	4361	1809	5580	4270	1907
	24	32	4239	2679	668	5797	3673	831	5344	3393	985	7380	4679	1581	7080	4497	1663	6240	4452	1858	5700	4406	1972

EWB : Evaporator Wet Bulb temperature (°C)

EDB : Evaporator Dry Bulb temperature (°C)

(°CDB) : Outdoor Unit Inlet Air Dry Temperature (°C)

TC : Total Capacity (W)

SHC : Sensible Heating Capacity (W)

PI : Power Input (W)

	INDOOR		OUTDOOR TEMPERATURE (°CDB)																				
	EWB	EDB	-10			21			27			32			35			40			43		
	°C	°C	TC	SHC	PI	TC	SHC	PI	TC	SHC	PI	TC	SHC	PI	TC	SHC	PI	TC	SHC	PI	TC	SHC	PI
1.5+1.5	12	18	1614	1148	328	1932	1619	412	1788	1494	485	2460	2067	782	2370	1976	816	2220	1863	876	2130	1772	910
	14	20	1614	1148	328	2076	1619	412	1932	1510	491	2640	2067	791	2550	1999	825	2370	1863	884	2280	1794	927
	16	22	1614	1222	333	2220	1619	417	2056	1510	497	2820	2067	799	2730	1999	842	2550	1863	901	2460	1794	935
	18	25	1731	1310	338	2364	1759	422	2179	1634	502	3000	2249	808	2880	2158	842	2700	2021	910	2580	1931	944
	19	27	1789	1354	343	2446	1852	428	2261	1712	508	3120	2362	816	3000	2271	850	2820	2135	910	2700	2044	944
	22	30	1983	1340	343	2713	1836	428	2508	1696	508	3450	2339	825	3330	2249	859	3000	2180	944	2790	2135	995
	24	32	2119	1340	348	2898	1836	433	2672	1696	514	3690	2339	825	3540	2249	867	3120	2226	969	2850	2203	1029
1.5+1.8	12	18	1775	1263	366	2125	1780	460	1967	1643	542	2706	2274	874	2607	2174	912	2442	2049	979	2343	1949	1017
	14	20	1775	1263	366	2284	1780	460	2125	1661	549	2904	2274	884	2805	2199	922	2607	2049	988	2508	1974	1036
	16	22	1775	1344	372	2442	1780	466	2261	1661	555	3102	2274	893	3003	2199	941	2805	2049	1007	2706	1974	1045
	18	25	1904	1441	378	2600	1934	472	2397	1798	561	3300	2473	903	3168	2374	941	2970	2224	1017	2838	2124	1055
	19	27	1968	1490	384	2691	2037	478	2487	1883	568	3432	2598	912	3300	2498	950	3102	2349	1017	2970	2249	1055
	22	30	2182	1474	384	2985	2020	478	2759	1866	568	3795	2573	922	3663	2473	960	3300	2399	1055	3069	2349	1112
	24	32	2331	1474	389	3188	2020	484	2939	1866	574	4059	2573	922	3894	2473	969	3432	2449	1083	3135	2424	1150
1.5+2.5	12	18	2152	1531	432	2576	2158	555	2384	1992	613	3280	2756	1050	3160	2635	1100	2960	2483	1188	2840	2362	1238
	14	20	2152	1531	432	2768	2158	555	2576	2013	622	3520	2756	1063	3400	2665	1113	3160	2483	1200	3040	2392	1263
	16	22	2152	1629	440	2960	2158	563	2741	2013	630	3760	2756	1075	3640	2665	1138	3400	2483	1225	3280	2392	1275
	18	25	2307	1747	447	3152	2345	571	2905	2179	639	4000	2998	1088	3840	2877	1138	3600	2695	1238	3440	2574	1288
	19	27	2385	1806	455	3261	2469	579	3015	2283	647	4160	3150	1100	4000	3028	1150	3760	2847	1238	3600	2726	1288
	22	30	2644	1786	455	3618	2449	579	3344	2262	647	4600	3119	1113	4440	2998	1163	4000	2907	1288	3720	2847	1363
	24	32	2826	1786	462	3864	2449	587	3563	2262	655	4920	3119	1113	4720	2998	1175	4160	2968	1325	3800	2938	1413
1.5+3.5	12	18	2690	1914	598	3220	2698	751	2981	2490	885	4100	3445	1426	3950	3293	1488	3700	3104	1597	3550	2953	1659
	14	20	2690	1914	598	3460	2698	751	3220	2516	895	4400	3445	1442	4250	3331	1504	3950	3104	1612	3800	2991	1690
	16	22	2690	2036	607	3700	2698	761	3426	2516	905	4700	3445	1457	4550	3331	1535	4250	3104	1643	4100	2991	1705
	18	25	2884	2184	617	3940	2931	770	3631	2724	916	5000	3748	1473	4800	3596	1535	4500	3369	1659	4300	3218	1721
	19	27	2981	2257	626	4077	3087	780	3769	2853	926	5200	3937	1488	5000	3786	1550	4700	3558	1659	4500	3407	1721
	22	30	3306	2233	626	4522	3061	780	4180	2827	926	5750	3899	1504	5550	3748	1566	5000	3634	1721	4650	3558	1814
	24	32	3532	2233	635	4831	3061	790	4454	2827	937	6150	3899	1504	5900	3748	1581	5200	3710	1767	4750	3672	1876

	INDOOR		OUTDOOR TEMPERATURE (°CDB)																				
	EWB	EDB	-10			21			27			32			35			40			43		
	°C	°C	TC	SHC	PI	TC	SHC	PI	TC	SHC	PI	TC	SHC	PI	TC	SHC	PI	TC	SHC	PI	TC	SHC	PI
1.5+4.2	12	18	3066	2182	667	3671	3075	825	3398	2839	963	4674	3927	1572	4503	3755	1636	4218	3539	1748	4047	3366	1812
	14	20	3066	2182	667	3945	3075	825	3671	2868	974	5016	3927	1588	4845	3798	1652	4503	3539	1764	4332	3409	1844
	16	22	3066	2322	677	4218	3075	835	3906	2868	985	5358	3927	1604	5187	3798	1684	4845	3539	1796	4674	3409	1860
	18	25	3288	2489	687	4491	3341	845	4140	3105	995	5700	4272	1620	5472	4100	1684	5130	3841	1812	4902	3668	1876
	19	27	3399	2573	696	4648	3519	855	4296	3253	1006	5928	4488	1636	5700	4316	1700	5358	4057	1812	5130	3884	1876
	22	30	3768	2545	696	5155	3489	855	4765	3223	1006	6555	4445	1652	6327	4272	1716	5700	4143	1876	5301	4057	1972
	24	32	4027	2545	706	5507	3489	866	5077	3223	1017	7011	4445	1652	6726	4272	1732	5928	4229	1924	5415	4186	2036
1.5+5.0	12	18	3497	2488	810	4186	3507	1017	3875	3237	1199	5330	4478	1932	5135	4281	2016	4810	4035	2163	4615	3839	2247
	14	20	3497	2488	810	4498	3507	1017	4186	3271	1213	5720	4478	1953	5525	4331	2037	5135	4035	2184	4940	3888	2289
	16	22	3497	2647	823	4810	3507	1030	4454	3271	1227	6110	4478	1974	5915	4331	2079	5525	4035	2226	5330	3888	2310
	18	25	3750	2839	835	5122	3810	1044	4721	3541	1241	6500	4872	1995	6240	4675	2079	5850	4380	2247	5590	4183	2331
	19	27	3876	2935	848	5300	4013	1057	4899	3709	1255	6760	5118	2016	6500	4921	2100	6110	4626	2247	5850	4429	2331
	22	30	4297	2903	848	5879	3979	1057	5434	3675	1255	7475	5069	2037	7215	4872	2121	6500	4724	2331	6045	4626	2457
	24	32	4592	2903	861	6280	3979	1071	5790	3675	1269	7995	5069	2037	7670	4872	2142	6760	4823	2394	6175	4774	2541
1.5+6.0	12	18	4035	2871	810	4831	4046	1017	4471	3735	1199	6150	5167	1932	5925	4940	2016	5550	4656	2163	5325	4429	2247
	14	20	4035	2871	810	5190	4046	1017	4831	3774	1213	6600	5167	1953	6375	4997	2037	5925	4656	2184	5700	4486	2289
	16	22	4035	3055	823	5550	4046	1030	5139	3774	1227	7050	5167	1974	6825	4997	2079	6375	4656	2226	6150	4486	2310
	18	25	4326	3276	835	5910	4397	1044	5447	4085	1241	7500	5622	1995	7200	5394	2079	6750	5054	2247	6450	4827	2331
	19	27	4472	3386	848	6115	4630	1057	5653	4280	1255	7800	5905	2016	7500	5678	2100	7050	5338	2247	6750	5111	2331
	22	30	4958	3349	848	6783	4591	1057	6269	4241	1255	8625	5849	2037	8325	5622	2121	7500	5451	2331	6975	5338	2457
	24	32	5299	3349	861	7246	4591	1071	6681	4241	1269	9225	5849	2037	8850	5622	2142	7800	5565	2394	7125	5508	2541
1.8+1.8	12	18	1937	1378	396	2319	1942	477	2146	1793	548	2952	2480	934	2844	2371	967	2664	2235	1025	2556	2126	1057
	14	20	1937	1378	396	2491	1942	477	2319	1812	554	3168	2480	943	3060	2399	975	2844	2235	1033	2736	2153	1074
	16	22	1937	1466	401	2664	1942	482	2467	1812	559	3384	2480	951	3276	2399	992	3060	2235	1049	2952	2153	1082
	18	25	2077	1572	406	2837	2110	488	2615	1961	565	3600	2698	959	3456	2589	992	3240	2426	1057	3096	2317	1090
	19	27	2147	1625	411	2935	2222	493	2713	2054	570	3744	2835	967	3600	2726	1000	3384	2562	1057	3240	2453	1090
	22	30	2380	1608	411	3256	2204	493	3009	2036	570	4140	2807	975	3996	2698	1008	3600	2617	1090	3348	2562	1139
	24	32	2543	1608	416	3478	2204	498	3207	2036	576	4428	2807	975	4248	2698	1016	3744	2671	1115	3420	2644	1172
1.8+2.5	12	18	2313	1646	436	2770	2320	584	2563	2141	671	3526	2963	1120	3397	2832	1160	3182	2670	1230	3053	2539	1270
	14	20	2313	1646	436	2976	2320	584	2770	2164	677	3784	2963	1130	3655	2865	1170	3397	2670	1240	3268	2572	1290
	16	22	2313	1751	442	3182	2320	591	2946	2164	684	4042	2963	1140	3913	2865	1190	3655	2670	1260	3526	2572	1300
	18	25	2480	1878	448	3388	2521	597	3123	2342	691	4300	3223	1150	4128	3093	1190	3870	2897	1270	3698	2767	1310
	19	27	2564	1941	454	3506	2655	603	3241	2454	698	4472	3386	1160	4300	3256	1200	4042	3060	1270	3870	2930	1310
	22	30	2843	1920	454	3889	2632	603	3594	2431	698	4945	3353	1170	4773	3223	1210	4300	3125	1310	3999	3060	1370
	24	32	3038	1920	460	4154	2632	610	3830	2431	704	5289	3353	1170	5074	3223	1220	4472	3190	1340	4085	3158	1410
1.8+3.5	12	18	2851	2029	613	3414	2859	770	3159	2639	908	4346	3652	1463	4187	3491	1526	3922	3290	1638	3763	3130	1701
	14	20	2851	2029	613	3668	2859	770	3414	2667	918	4664	3652	1479	4505	3531	1542	4187	3290	1654	4028	3170	1733
	16	22	2851	2159	623	3922	2859	780	3631	2667	929	4982	3652	1495	4823	3531	1574	4505	3290	1685	4346	3170	1749
	18	25	3057	2315	633	4176	3107	790	3849	2887	940	5300	3973	1511	5088	3812	1574	4770	3571	1701	4558	3411	1765
	19	27	3160	2393	642	4321	3272	800	3995	3024	950	5512	4173	1526	5300	4013	1590	4982	3772	1701	4770	3611	1765
	22	30	3504	2367	642	4794	3244	800	4430	2997	950	6095	4133	1542	5883	3973	1606	5300	3852	1765	4929	3772	1860
	24	32	3744	2367	652	5120	3244	811	4721	2997	961	6519	4133	1542	6254	3973	1622	5512	3932	1813	5035	3892	1924

	INDOOR		OUTDOOR TEMPERATURE (°CDB)																				
	EWB	EDB	-10			21			27			32			35			40			43		
	°C	°C	TC	SHC	PI	TC	SHC	PI	TC	SHC	PI	TC	SHC	PI	TC	SHC	PI	TC	SHC	PI	TC	SHC	PI
1.8+4.2	12	18	3151	2206	683	3814	2670	870	3859	2701	1078	5046	3532	1633	4887	3421	1696	4622	3235	1808	4463	3124	1871
	14	20	3151	2206	683	4068	2848	870	4114	2880	1088	5364	3755	1649	5205	3644	1712	4887	3421	1824	4728	3310	1903
	16	22	3151	2206	693	4322	3025	880	4331	3032	1099	5682	3977	1665	5523	3866	1744	5205	3644	1855	5046	3532	1919
	18	25	3357	2350	703	4576	3203	890	4549	3184	1110	6000	4200	1681	5788	4052	1744	5470	3829	1871	5258	3681	1935
	19	27	3460	2422	712	4721	3305	900	4695	3287	1120	6212	4348	1696	6000	4200	1760	5682	3977	1871	5470	3829	1935
	22	30	3804	2663	712	5194	3636	900	5130	3591	1120	6795	4757	1712	6583	4608	1776	6000	4200	1935	5629	3940	2030
	24	32	4044	2831	722	5520	3864	911	5421	3795	1131	7219	5053	1712	6954	4868	1792	6212	4348	1983	5735	4015	2094
1.8+5.0	12	18	3658	2603	914	4380	3669	1148	4054	3386	1353	5576	4685	2180	5372	4479	2275	5032	4222	2441	4828	4016	2536
	14	20	3658	2603	914	4706	3669	1148	4380	3422	1369	5984	4685	2204	5780	4531	2299	5372	4222	2465	5168	4067	2583
	16	22	3658	2770	929	5032	3669	1163	4659	3422	1385	6392	4685	2228	6188	4531	2346	5780	4222	2512	5576	4067	2607
	18	25	3923	2970	943	5358	3986	1178	4939	3704	1400	6800	5097	2252	6528	4891	2346	6120	4582	2536	5848	4376	2631
	19	27	4055	3070	957	5545	4198	1193	5125	3880	1416	7072	5354	2275	6800	5148	2370	6392	4839	2536	6120	4634	2631
	22	30	4496	3037	957	6150	4163	1193	5684	3845	1416	7820	5303	2299	7548	5097	2394	6800	4942	2631	6324	4839	2773
	24	32	4804	3037	971	6570	4163	1208	6057	3845	1432	8364	5303	2299	8024	5097	2417	7072	5045	2702	6460	4994	2868
1.8+6.0	12	18	3958	2969	914	4880	3660	1148	5054	3791	1353	6576	4932	2180	6372	4779	2275	6032	4524	2441	5828	4371	2536
	14	20	3958	2969	914	5206	3905	1148	5380	4035	1369	6984	5238	2204	6780	5085	2299	6372	4779	2465	6168	4626	2583
	16	22	3958	2969	929	5532	4149	1163	5659	4244	1385	7392	5544	2228	7188	5391	2346	6780	5085	2512	6576	4932	2607
	18	25	4223	3167	943	5858	4394	1178	5939	4454	1400	7800	5850	2252	7528	5646	2346	7120	5340	2536	6848	5136	2631
	19	27	4355	3266	957	6045	4534	1193	6125	4594	1416	8072	6054	2275	7800	5850	2370	7392	5544	2536	7120	5340	2631
	22	30	4796	3597	957	6650	4988	1193	6684	5013	1416	8820	6615	2299	8548	6411	2394	7800	5850	2631	7324	5493	2773
	24	32	5104	3828	971	7070	5303	1208	7057	5293	1432	9364	7023	2299	9024	6768	2417	8072	6054	2702	7460	5595	2868
2.5+2.5	12	18	2690	1914	529	3220	2698	663	2981	2490	782	4100	3445	1260	3950	3293	1315	3700	3104	1411	3550	2953	1466
	14	20	2690	1914	529	3460	2698	663	3220	2516	791	4400	3445	1274	4250	3331	1329	3950	3104	1425	3800	2991	1493
	16	22	2690	2036	537	3700	2698	672	3426	2516	800	4700	3445	1288	4550	3331	1356	4250	3104	1452	4100	2991	1507
	18	25	2884	2184	545	3940	2931	681	3631	2724	810	5000	3748	1302	4800	3596	1356	4500	3369	1466	4300	3218	1521
	19	27	2981	2257	553	4077	3087	690	3769	2853	819	5200	3937	1315	5000	3786	1370	4700	3558	1466	4500	3407	1521
	22	30	3306	2233	553	4522	3061	690	4180	2827	819	5750	3899	1329	5550	3748	1384	5000	3634	1521	4650	3558	1603
	24	32	3532	2233	562	4831	3061	698	4454	2827	828	6150	3899	1329	5900	3748	1397	5200	3710	1562	4750	3672	1658
2.5+3.5	12	18	3228	2297	772	3864	3237	969	3577	2988	1142	4920	4134	1840	4740	3952	1920	4440	3725	2060	4260	3543	2140
	14	20	3228	2297	772	4152	3237	969	3864	3019	1155	5280	4134	1860	5100	3998	1940	4740	3725	2080	4560	3589	2180
	16	22	3228	2444	784	4440	3237	981	4111	3019	1168	5640	4134	1880	5460	3998	1980	5100	3725	2120	4920	3589	2200
	18	25	3461	2620	796	4728	3517	994	4358	3268	1182	6000	4497	1900	5760	4316	1980	5400	4043	2140	5160	3861	2220
	19	27	3578	2709	808	4892	3704	1007	4522	3424	1195	6240	4724	1920	6000	4543	2000	5640	4270	2140	5400	4088	2220
	22	30	3967	2679	808	5427	3673	1007	5016	3393	1195	6900	4679	1940	6660	4497	2020	6000	4361	2220	5580	4270	2340
	24	32	4239	2679	820	5797	3673	1020	5344	3393	1209	7380	4679	1940	7080	4497	2040	6240	4452	2280	5700	4406	2420
2.5+4.2	12	18	3428	2571	772	4164	3123	969	4277	3208	1142	5620	4215	1840	5440	4080	1920	5140	3855	2060	4960	3720	2140
	14	20	3428	2571	772	4452	3339	969	4564	3423	1155	5980	4485	1860	5800	4350	1940	5440	4080	2080	5260	3945	2180
	16	22	3428	2571	784	4740	3555	981	4811	3608	1168	6340	4755	1880	6160	4620	1980	5800	4350	2120	5620	4215	2200
	18	25	3661	2746	796	5028	3771	994	5058	3794	1182	6700	5025	1900	6460	4845	1980	6100	4575	2140	5860	4395	2220
	19	27	3778	2834	808	5192	3894	1007	5222	3917	1195	6940	5205	1920	6700	5025	2000	6340	4755	2140	6100	4575	2220
	22	30	4167	3125	808	5727	4295	1007	5716	4287	1195	7600	5700	1940	7360	5520	2020	6700	5025	2220	6280	4710	2340
	24	32	4439	3329	820	6097	4573	1020	6044	4533	1209	8080	6060	1940	7780	5835	2040	6940	5205	2280	6400	4800	2420

	INDOOR		OUTDOOR TEMPERATURE (°CDB)																				
	EWB	EDB	-10			21			27			32			35			40			43		
	°C	°C	TC	SHC	PI	TC	SHC	PI	TC	SHC	PI	TC	SHC	PI	TC	SHC	PI	TC	SHC	PI	TC	SHC	PI
2.5+5.0	12	18	4035	2871	995	4831	4046	1249	4471	3735	1473	6150	5167	2374	5925	4940	2477	5550	4656	2657	5325	4429	2761
	14	20	4035	2871	995	5190	4046	1249	4831	3774	1490	6600	5167	2399	6375	4997	2503	5925	4656	2683	5700	4486	2812
	16	22	4035	3055	1011	5550	4046	1266	5139	3774	1507	7050	5167	2425	6825	4997	2554	6375	4656	2735	6150	4486	2838
	18	25	4326	3276	1026	5910	4397	1282	5447	4085	1525	7500	5622	2451	7200	5394	2554	6750	5054	2761	6450	4827	2864
	19	27	4472	3386	1042	6115	4630	1299	5653	4280	1542	7800	5905	2477	7500	5678	2580	7050	5338	2761	6750	5111	2864
	22	30	4958	3349	1042	6783	4591	1299	6269	4241	1542	8625	5849	2503	8325	5622	2606	7500	5451	2864	6975	5338	3019
	24	32	5299	3349	1058	7246	4591	1315	6681	4241	1559	9225	5849	2503	8850	5622	2632	7800	5565	2941	7125	5508	3122
2.5+6.0	12	18	4235	3071	995	5031	4246	1249	5471	4535	1473	7150	5967	2374	6925	5740	2477	6550	5456	2657	6325	5229	2761
	14	20	4235	3071	995	5390	4246	1249	5831	4574	1490	7600	5967	2399	7375	5797	2503	6925	5456	2683	6700	5286	2812
	16	22	4235	3255	1011	5750	4246	1266	6139	4574	1507	8050	5967	2425	7825	5797	2554	7375	5456	2735	7150	5286	2838
	18	25	4526	3476	1026	6110	4597	1282	6447	4885	1525	8500	6422	2451	8200	6194	2554	7750	5854	2761	7450	5627	2864
	19	27	4672	3586	1042	6315	4830	1299	6653	5080	1542	8800	6705	2477	8500	6478	2580	8050	6138	2761	7750	5911	2864
	22	30	5158	3549	1042	6983	4791	1299	7269	5041	1542	9625	6649	2503	9325	6422	2606	8500	6251	2864	7975	6138	3019
	24	32	5499	3549	1058	7446	4791	1315	7681	5041	1559	10225	6649	2503	9850	6422	2632	8800	6365	2941	8125	6308	3122
3.5+3.5	12	18	3766	2679	961	4509	3777	1206	4173	3486	1421	5740	4823	2291	5530	4611	2390	5180	4346	2565	4970	4134	2664
	14	20	3766	2679	961	4844	3777	1206	4509	3522	1438	6160	4823	2316	5950	4664	2415	5530	4346	2590	5320	4187	2714
	16	22	3766	2851	976	5180	3777	1222	4796	3522	1455	6580	4823	2341	6370	4664	2465	5950	4346	2639	5740	4187	2739
	18	25	4038	3057	991	5516	4103	1238	5084	3813	1471	7000	5247	2366	6720	5035	2465	6300	4717	2664	6020	4505	2764
	19	27	4174	3160	1006	5708	4321	1253	5276	3994	1488	7280	5512	2390	7000	5300	2490	6580	4982	2664	6300	4770	2764
	22	30	4628	3126	1006	6331	4285	1253	5851	3958	1488	8050	5459	2415	7770	5247	2515	7000	5088	2764	6510	4982	2913
	24	32	4945	3126	1021	6763	4285	1269	6235	3958	1505	8610	5459	2415	8260	5247	2540	7280	5194	2839	6650	5141	3013
3.5+4.2	12	18	3966	2879	961	4709	3977	1206	4873	3986	1421	6440	5323	2291	6230	5111	2390	5880	4846	2565	5670	4634	2664
	14	20	3966	2879	961	5044	3977	1206	5209	4022	1438	6860	5323	2316	6650	5164	2415	6230	4846	2590	6020	4687	2714
	16	22	3966	3051	976	5380	3977	1222	5496	4022	1455	7280	5323	2341	7070	5164	2465	6650	4846	2639	6440	4687	2739
	18	25	4238	3257	991	5716	4303	1238	5784	4313	1471	7700	5747	2366	7420	5535	2465	7000	5217	2664	6720	5005	2764
	19	27	4374	3360	1006	5908	4521	1253	5976	4494	1488	7980	6012	2390	7700	5800	2490	7280	5482	2664	7000	5270	2764
	22	30	4828	3326	1006	6531	4485	1253	6551	4458	1488	8750	5959	2415	8470	5747	2515	7700	5588	2764	7210	5482	2913
	24	32	5145	3326	1021	6963	4485	1269	6935	4458	1505	9310	5959	2415	8960	5747	2540	7980	5694	2839	7350	5641	3013
3.5+5.0	12	18	4573	3253	1019	5475	4586	1304	5067	4233	1455	6970	5856	2468	6715	5599	2584	6290	5277	2787	6035	5020	2903
	14	20	4573	3253	1019	5882	4586	1304	5475	4277	1475	7480	5856	2497	7225	5663	2613	6715	5277	2816	6460	5084	2961
	16	22	4573	3462	1036	6290	4586	1323	5824	4277	1494	7990	5856	2526	7735	5663	2671	7225	5277	2874	6970	5084	2990
	18	25	4903	3712	1054	6698	4983	1341	6174	4630	1514	8500	6371	2555	8160	6114	2671	7650	5728	2903	7310	5470	3019
	19	27	5069	3837	1071	6931	5247	1360	6406	4850	1533	8840	6693	2584	8500	6435	2700	7990	6049	2903	7650	5792	3019
	22	30	5619	3796	1071	7688	5203	1360	7105	4806	1533	9775	6629	2613	9435	6371	2729	8500	6178	3019	7905	6049	3193
	24	32	6005	3796	1089	8212	5203	1378	7571	4806	1553	10455	6629	2613	10030	6371	2758	8840	6307	3106	8075	6242	3309
3.5+6.0	12	18	4773	3453	1019	5675	4786	1304	6067	5033	1455	7970	6656	2468	7715	6399	2584	7290	6077	2787	7035	5820	2903
	14	20	4773	3453	1019	6082	4786	1304	6475	5077	1475	8480	6656	2497	8225	6463	2613	7715	6077	2816	7460	5884	2961
	16	22	4773	3662	1036	6490	4786	1323	6824	5077	1494	8990	6656	2526	8735	6463	2671	8225	6077	2874	7970	5884	2990
	18	25	5103	3912	1054	6898	5183	1341	7174	5430	1514	9500	7171	2555	9160	6914	2671	8650	6528	2903	8310	6270	3019
	19	27	5269	4037	1071	7131	5447	1360	7406	5650	1533	9840	7493	2584	9500	7235	2700	8990	6849	2903	8650	6592	3019
	22	30	5819	3996	1071	7888	5403	1360	8105	5606	1533	10775	7429	2613	10435	7171	2729	9500	6978	3019	8905	6849	3193
	24	32	6205	3996	1089	8412	5403	1378	8571	5606	1553	11455	7429	2613	11030	7171	2758	9840	7107	3106	9075	7042	3309

	INDOOR		OUTDOOR TEMPERATURE (°CDB)																				
	EWB	EDB	-10			21			27			32			35			40			43		
	°C	°C	TC	SHC	PI	TC	SHC	PI	TC	SHC	PI	TC	SHC	PI	TC	SHC	PI	TC	SHC	PI	TC	SHC	PI
4.2+4.2	12	18	4573	3253	1019	5475	4586	1304	5067	4233	1455	6970	5856	2468	6715	5599	2584	6290	5277	2787	6035	5020	2903
	14	20	4573	3253	1019	5882	4586	1304	5475	4277	1475	7480	5856	2497	7225	5663	2613	6715	5277	2816	6460	5084	2961
	16	22	4573	3462	1036	6290	4586	1323	5824	4277	1494	7990	5856	2526	7735	5663	2671	7225	5277	2874	6970	5084	2990
	18	25	4903	3712	1054	6698	4983	1341	6174	4630	1514	8500	6371	2555	8160	6114	2671	7650	5728	2903	7310	5470	3019
	19	27	5069	3837	1071	6931	5247	1360	6406	4850	1533	8840	6693	2584	8400	6435	2700	7990	6049	2903	7650	5792	3019
	22	30	5619	3796	1071	7688	5203	1360	7105	4806	1533	9775	6629	2613	9435	6371	2729	8500	6178	3019	7905	6049	3193
	24	32	6005	3796	1089	8212	5203	1378	7571	4806	1553	10455	6629	2613	10030	6371	2758	8840	6307	3106	8075	6242	3309
4.2+5.0	12	18	4673	3353	1219	5575	4686	1004	5767	4733	1655	7670	6356	2668	7415	6099	2784	6990	5777	2487	6735	5520	3103
	14	20	4673	3353	1219	5982	4686	1004	6175	4777	1675	8180	6356	2697	7925	6163	2813	7415	5777	2516	7160	5584	3161
	16	22	4673	3562	1236	6390	4686	1023	6524	4777	1694	8690	6356	2726	8435	6163	2871	7925	5777	2574	7670	5584	3190
	18	25	5003	3812	1254	6798	5083	1041	6874	5130	1714	9200	6871	2755	8860	6614	2871	8350	6228	2603	8010	5970	3219
	19	27	5169	3937	1271	7031	5347	1060	7106	5350	1733	9540	7193	2784	9200	6935	2900	8690	6549	2603	8350	6292	3219
	22	30	5719	3896	1271	7788	5303	1060	7805	5306	1733	10475	7129	2813	10135	6871	2929	9200	6678	2719	8605	6549	3393
	24	32	6105	3896	1289	8312	5303	1078	8271	5306	1753	11155	7129	2813	10730	6871	2958	9540	6807	2806	8775	6742	3509
4.2+6.0	12	18	5073	3653	1219	5975	4986	1004	6567	5333	1655	8470	6956	2668	8215	6699	2784	7790	6377	2487	7535	6120	3103
	14	20	5073	3653	1219	6382	4986	1004	6975	5377	1675	8980	6956	2697	8725	6763	2813	8215	6377	2516	7960	6184	3161
	16	22	5073	3862	1236	6790	4986	1023	7324	5377	1694	9490	6956	2726	9235	6763	2871	8725	6377	2574	8470	6184	3190
	18	25	5403	4112	1254	7198	5383	1041	7674	5730	1714	10000	7471	2755	9660	7214	2871	9150	6828	2603	8810	6570	3219
	19	27	5569	4237	1271	7431	5647	1060	7906	5950	1733	10340	7793	2784	10000	7535	2900	9490	7149	2603	9150	6892	3219
	22	30	6119	4196	1271	8188	5603	1060	8605	5906	1733	11275	7729	2813	10935	7471	2929	10000	7278	2719	9405	7149	3393
	24	32	6505	4196	1289	8712	5603	1078	9071	5906	1753	11955	7729	2813	11530	7471	2958	10340	7407	2806	9575	7342	3509
5.0+5.0	12	18	5073	3653	1419	5975	4986	1204	6567	5333	1855	8470	6956	2868	8215	6699	2984	7790	6377	2687	7535	6120	3303
	14	20	5073	3653	1419	6382	4986	1204	6975	5377	1875	8980	6956	2897	8725	6763	3013	8215	6377	2716	7960	6184	3361
	16	22	5073	3862	1436	6790	4986	1223	7324	5377	1894	9490	6956	2926	9235	6763	3071	8725	6377	2774	8470	6184	3390
	18	25	5403	4112	1454	7198	5383	1241	7674	5730	1914	10000	7471	2955	9660	7214	3071	9150	6828	2803	8810	6570	3419
	19	27	5569	4237	1471	7431	5647	1260	7906	5950	1933	10340	7793	2984	10000	7535	3100	9490	7149	2803	9150	6892	3419
	22	30	6119	4196	1471	8188	5603	1260	8605	5906	1933	11275	7729	3013	10935	7471	3129	10000	7278	2919	9405	7149	3593
	24	32	6505	4196	1489	8712	5603	1278	9071	5906	1953	11955	7729	3013	11530	7471	3158	10340	7407	3006	9575	7342	3709
5.0+6.0	12	18	5073	3653	1519	5975	4986	1304	6567	5333	1955	8470	6956	2968	8215	6699	3084	7790	6377	2787	7535	6120	3403
	14	20	5073	3653	1519	6382	4986	1304	6975	5377	1975	8980	6956	2997	8725	6763	3113	8215	6377	2816	7960	6184	3461
	16	22	5073	3862	1536	6790	4986	1323	7324	5377	1994	9490	6956	3026	9235	6763	3171	8725	6377	2874	8470	6184	3490
	18	25	5403	4112	1554	7198	5383	1341	7674	5730	2014	10000	7471	3055	9660	7214	3171	9150	6828	2903	8810	6570	3519
	19	27	5569	4237	1571	7431	5647	1360	7906	5950	2033	10340	7793	3084	10000	7535	3200	9490	7149	2903	9150	6892	3519
	22	30	6119	4196	1571	8188	5603	1360	8605	5906	2033	11275	7729	3113	10935	7471	3229	10000	7278	3019	9405	7149	3693
	24	32	6505	4196	1589	8712	5603	1378	9071	5906	2053	11955	7729	3113	11530	7471	3258	10340	7407	3106	9575	7342	3809
6.0+6.0	12	18	5073	3653	1619	5975	4986	1404	6567	5333	2055	8470	6956	3068	8215	6699	3184	7790	6377	2887	7535	6120	3503
	14	20	5073	3653	1619	6382	4986	1404	6975	5377	2075	8980	6956	3097	8725	6763	3213	8215	6377	2916	7960	6184	3561
	16	22	5073	3862	1636	6790	4986	1423	7324	5377	2094	9490	6956	3126	9235	6763	3271	8725	6377	2974	8470	6184	3590
	18	25	5403	4112	1654	7198	5383	1441	7674	5730	2114	10000	7471	3155	9660	7214	3271	9150	6828	3003	8810	6570	3619
	19	27	5569	4237	1671	7431	5647	1460	7906	5950	2133	10340	7793	3184	10000	7535	3300	9490	7149	3003	9150	6892	3619
	22	30	6119	4196	1671	8188	5603	1460	8605	5906	2133	11275	7729	3213	10935	7471	3329	10000	7278	3119	9405	7149	3793
	24	32	6505	4196	1689	8712	5603	1478	9071	5906	2153	11955	7729	3213	11530	7471	3358	10340	7407	3206	9575	7342	3909

	INDOOR		OUTDOOR TEMPERATURE (°CDB)																				
	EWB	EDB	-10			21			27			32			35			40			43		
	°C	°C	TC	SHC	PI	TC	SHC	PI	TC	SHC	PI	TC	SHC	PI	TC	SHC	PI	TC	SHC	PI	TC	SHC	PI
1.5+1.5+1.5	12	18	2421	1722	482	2898	2428	605	2683	2241	713	3690	3100	1150	3555	2964	1200	3330	2794	1288	3195	2657	1338
	14	20	2421	1722	482	3114	2428	605	2898	2264	722	3960	3100	1163	3825	2998	1213	3555	2794	1300	3420	2692	1363
	16	22	2421	1833	490	3330	2428	613	3083	2264	730	4230	3100	1175	4095	2998	1238	3825	2794	1325	3690	2692	1375
	18	25	2596	1965	497	3546	2638	621	3268	2451	739	4500	3373	1188	4320	3237	1238	4050	3032	1338	3870	2896	1388
	19	27	2683	2032	505	3669	2778	629	3392	2568	747	4680	3543	1200	4500	3407	1250	4230	3203	1338	4050	3066	1388
	22	30	2975	2010	505	4070	2755	629	3762	2545	747	5175	3509	1213	4995	3373	1263	4500	3271	1388	4185	3203	1463
	24	32	3179	2010	512	4348	2755	637	4008	2545	755	5535	3509	1213	5310	3373	1275	4680	3339	1425	4275	3305	1513
1.5+1.5+1.8	12	18	2582	1837	521	3092	2590	654	2861	2390	771	3936	3307	1242	3792	3162	1296	3552	2980	1391	3408	2835	1445
	14	20	2582	1837	521	3322	2590	654	3092	2415	780	4224	3307	1256	4080	3198	1310	3792	2980	1404	3648	2871	1472
	16	22	2582	1955	529	3552	2590	662	3289	2415	789	4512	3307	1269	4368	3198	1337	4080	2980	1431	3936	2871	1485
	18	25	2769	2096	537	3782	2814	671	3486	2615	798	4800	3598	1283	4608	3452	1337	4320	3234	1445	4128	3089	1499
	19	27	2862	2167	545	3914	2963	680	3618	2739	807	4992	3780	1296	4800	3634	1350	4512	3416	1445	4320	3271	1499
	22	30	3173	2143	545	4341	2938	680	4012	2714	807	5520	3743	1310	5328	3598	1364	4800	3489	1499	4464	3416	1580
	24	32	3391	2143	553	4637	2938	688	4276	2714	816	5904	3743	1310	5664	3598	1377	4992	3561	1539	4560	3525	1634
1.5+1.5+2.5	12	18	2959	2105	635	3542	2967	782	3279	2739	910	4510	3789	1431	4345	3623	1490	4070	3415	1595	3905	3248	1654
	14	20	2959	2105	635	3806	2967	782	3542	2768	920	4840	3789	1446	4675	3664	1505	4345	3415	1610	4180	3290	1684
	16	22	2959	2240	644	4070	2967	791	3769	2768	930	5170	3789	1461	5005	3664	1535	4675	3415	1639	4510	3290	1699
	18	25	3173	2402	653	4334	3224	801	3995	2996	940	5500	4122	1476	5280	3956	1535	4950	3706	1654	4730	3540	1714
	19	27	3280	2483	662	4485	3395	810	4145	3139	950	5720	4331	1490	5500	4164	1550	5170	3914	1654	4950	3748	1714
	22	30	3636	2456	662	4974	3367	810	4598	3110	950	6325	4289	1505	6105	4122	1565	5500	3998	1714	5115	3914	1803
	24	32	3886	2456	671	5314	3367	820	4899	3110	960	6765	4289	1505	6490	4122	1580	5720	4081	1759	5225	4039	1863
1.5+1.5+3.5	12	18	3497	2488	810	4186	3507	1017	3875	3237	1199	5330	4478	1932	5135	4281	2016	4810	4035	2163	4615	3839	2247
	14	20	3497	2488	810	4498	3507	1017	4186	3271	1213	5720	4478	1953	5525	4331	2037	5135	4035	2184	4940	3888	2289
	16	22	3497	2647	823	4810	3507	1030	4454	3271	1227	6110	4478	1974	5915	4331	2079	5525	4035	2226	5330	3888	2310
	18	25	3750	2839	835	5122	3810	1044	4721	3541	1241	6500	4872	1995	6240	4675	2079	5850	4380	2247	5590	4183	2331
	19	27	3876	2935	848	5300	4013	1057	4899	3709	1255	6760	5118	2016	6500	4921	2100	6110	4626	2247	5850	4429	2331
	22	30	4297	2903	848	5879	3979	1057	5434	3675	1255	7475	5069	2037	7215	4872	2121	6500	4724	2331	6045	4626	2457
	24	32	4592	2903	861	6280	3979	1071	5790	3675	1269	7995	5069	2037	7670	4872	2142	6760	4823	2394	6175	4774	2541
1.5+1.5+4.2	12	18	3873	2756	829	4637	3885	1041	4292	3586	1227	5904	4961	1978	5688	4743	2064	5328	4470	2215	5112	4252	2301
	14	20	3873	2756	829	4983	3885	1041	4637	3623	1242	6336	4961	2000	6120	4797	2086	5688	4470	2236	5472	4306	2344
	16	22	3873	2933	842	5328	3885	1055	4933	3623	1256	6768	4961	2021	6552	4797	2129	6120	4470	2279	5904	4306	2365
	18	25	4153	3145	855	5673	4221	1069	5229	3922	1270	7200	5397	2043	6912	5179	2129	6480	4852	2301	6192	4634	2387
	19	27	4293	3251	868	5871	4445	1082	5427	4109	1285	7488	5669	2064	7200	5451	2150	6768	5124	2301	6480	4906	2387
	22	30	4760	3215	868	6512	4407	1082	6019	4071	1285	8280	5615	2086	7992	5397	2172	7200	5233	2387	6696	5124	2516
	24	32	5087	3215	881	6956	4407	1096	6413	4071	1299	8856	5615	2086	8496	5397	2193	7488	5342	2451	6840	5288	2602
1.5+1.5+5.0	12	18	4304	3062	930	5153	4316	1150	4769	3984	1443	6560	5512	2222	6320	5270	2311	5920	4967	2467	5680	4724	2556
	14	20	4304	3062	930	5536	4316	1150	5153	4026	1458	7040	5512	2244	6800	5330	2333	6320	4967	2489	6080	4785	2601
	16	22	4304	3258	944	5920	4316	1164	5481	4026	1473	7520	5512	2266	7280	5330	2378	6800	4967	2534	6560	4785	2623
	18	25	4615	3494	957	6304	4690	1178	5810	4358	1488	8000	5996	2289	7680	5754	2378	7200	5391	2556	6880	5148	2645
	19	27	4770	3612	971	6523	4939	1193	6030	4565	1503	8320	6299	2311	8000	6057	2400	7520	5694	2556	7200	5451	2645
	22	30	5289	3572	971	7236	4897	1193	6687	4524	1503	9200	6239	2333	8880	5996	2422	8000	5815	2645	7440	5694	2779
	24	32	5652	3572	984	7729	4897	1207	7126	4524	1518	9840	6239	2333	9440	5996	2445	8320	5936	2712	7600	5875	2868

	INDOOR		OUTDOOR TEMPERATURE (°CDB)																				
	EWB	EDB	-10			21			27			32			35			40			43		
	°C	°C	TC	SHC	PI	TC	SHC	PI	TC	SHC	PI	TC	SHC	PI	TC	SHC	PI	TC	SHC	PI	TC	SHC	PI
1.5+1.5+6.0	12	18	4842	3445	960	5797	4856	1180	5365	4482	1513	7380	6201	2292	7110	5928	2381	6660	5588	2537	6390	5315	2626
	14	20	4842	3445	960	6228	4856	1180	5797	4529	1528	7920	6201	2314	7650	5996	2403	7110	5588	2559	6840	5383	2671
	16	22	4842	3666	974	6660	4856	1194	6167	4529	1543	8460	6201	2336	8190	5996	2448	7650	5588	2604	7380	5383	2693
	18	25	5192	3931	987	7092	5276	1208	6537	4902	1558	9000	6746	2359	8640	6473	2448	8100	6064	2626	7740	5792	2715
	19	27	5367	4063	1001	7338	5556	1223	6783	5136	1573	9360	7087	2381	9000	6814	2470	8460	6405	2626	8100	6133	2715
	22	30	5950	4019	1001	8140	5509	1223	7523	5089	1573	10350	7018	2403	9990	6746	2492	9000	6541	2715	8370	6405	2849
	24	32	6358	4019	1014	8695	5509	1237	8017	5089	1588	11070	7018	2403	10620	6746	2515	9360	6678	2782	8550	6610	2938
1.5+1.8+1.8	12	18	2744	1952	621	3285	2752	754	3040	2540	871	4182	3514	1342	4029	3359	1396	3774	3166	1491	3621	3012	1545
	14	20	2744	1952	621	3529	2752	754	3285	2566	880	4488	3514	1356	4335	3398	1410	4029	3166	1504	3876	3050	1572
	16	22	2744	2077	629	3774	2752	762	3494	2566	889	4794	3514	1369	4641	3398	1437	4335	3166	1531	4182	3050	1585
	18	25	2942	2227	637	4019	2990	771	3704	2778	898	5100	3823	1383	4896	3668	1437	4590	3437	1545	4386	3282	1599
	19	27	3041	2302	645	4158	3148	780	3844	2910	907	5304	4016	1396	5100	3861	1450	4794	3630	1545	4590	3475	1599
	22	30	3372	2277	645	4613	3122	780	4263	2884	907	5865	3977	1410	5661	3823	1464	5100	3707	1599	4743	3630	1680
	24	32	3603	2277	653	4927	3122	788	4543	2884	916	6273	3977	1410	6018	3823	1477	5304	3784	1639	4845	3745	1734
1.5+1.8+2.5	12	18	3120	2220	621	3736	3129	754	3457	2888	1071	4756	3996	1542	4582	3820	1596	4292	3601	1691	4118	3425	1745
	14	20	3120	2220	621	4014	3129	754	3736	2919	1080	5104	3996	1556	4930	3864	1610	4582	3601	1704	4408	3469	1772
	16	22	3120	2362	629	4292	3129	762	3974	2919	1089	5452	3996	1569	5278	3864	1637	4930	3601	1731	4756	3469	1785
	18	25	3346	2533	637	4570	3400	771	4213	3159	1098	5800	4347	1583	5568	4172	1637	5220	3908	1745	4988	3733	1799
	19	27	3459	2618	645	4729	3581	780	4371	3310	1107	6032	4567	1596	5800	4391	1650	5452	4128	1745	5220	3952	1799
	22	30	3834	2590	645	5246	3550	780	4848	3280	1107	6670	4523	1610	6438	4347	1664	5800	4216	1799	5394	4128	1880
	24	32	4098	2590	653	5603	3550	788	5166	3280	1116	7134	4523	1610	6844	4347	1677	6032	4303	1839	5510	4260	1934
1.5+1.8+3.5	12	18	3658	2603	714	4380	3669	896	4054	3386	1056	5576	4685	1702	5372	4479	1776	5032	4222	1906	4828	4016	1980
	14	20	3658	2603	714	4706	3669	896	4380	3422	1068	5984	4685	1721	5780	4531	1795	5372	4222	1924	5168	4067	2017
	16	22	3658	2770	725	5032	3669	908	4659	3422	1081	6392	4685	1739	6188	4531	1832	5780	4222	1961	5576	4067	2035
	18	25	3923	2970	736	5358	3986	920	4939	3704	1093	6800	5097	1758	6528	4891	1832	6120	4582	1980	5848	4376	2054
	19	27	4055	3070	747	5545	4198	931	5125	3880	1106	7072	5354	1776	6800	5148	1850	6392	4839	1980	6120	4634	2054
	22	30	4496	3037	747	6150	4163	931	5684	3845	1106	7820	5303	1795	7548	5097	1869	6800	4942	2054	6324	4839	2165
	24	32	4804	3037	758	6570	4163	943	6057	3845	1118	8364	5303	1795	8024	5097	1887	7072	5045	2109	6460	4994	2239
1.5+1.8+4.2	12	18	4035	2871	852	4831	4046	1044	4471	3735	1363	6150	5167	2044	5925	4940	2122	5550	4656	2259	5325	4429	2337
	14	20	4035	2871	852	5190	4046	1044	4831	3774	1376	6600	5167	2064	6375	4997	2142	5925	4656	2278	5700	4486	2376
	16	22	4035	3055	864	5550	4046	1057	5139	3774	1389	7050	5167	2083	6825	4997	2181	6375	4656	2317	6150	4486	2395
	18	25	4326	3276	876	5910	4397	1069	5447	4085	1402	7500	5622	2103	7200	5394	2181	6750	5054	2337	6450	4827	2415
	19	27	4472	3386	888	6115	4630	1082	5653	4280	1415	7800	5905	2122	7500	5678	2200	7050	5338	2337	6750	5111	2415
	22	30	4958	3349	888	6783	4591	1082	6269	4241	1415	8625	5849	2142	8325	5622	2220	7500	5451	2415	6975	5338	2532
	24	32	5299	3349	899	7246	4591	1094	6681	4241	1428	9225	5849	2142	8850	5622	2239	7800	5565	2473	7125	5508	2610
1.5+1.8+5.0	12	18	4465	3177	960	5346	4478	1180	4948	4134	1443	6806	5718	2222	6557	5467	2311	6142	5153	2467	5893	4902	2556
	14	20	4465	3177	960	5744	4478	1180	5346	4177	1458	7304	5718	2244	7055	5530	2333	6557	5153	2489	6308	4964	2601
	16	22	4465	3381	974	6142	4478	1194	5687	4177	1473	7802	5718	2266	7553	5530	2378	7055	5153	2534	6806	4964	2623
	18	25	4788	3625	987	6540	4865	1208	6028	4521	1488	8300	6221	2289	7968	5970	2378	7470	5593	2556	7138	5341	2645
	19	27	4949	3747	1001	6768	5124	1223	6256	4736	1503	8632	6535	2311	8300	6284	2400	7802	5907	2556	7470	5656	2645
	22	30	5487	3706	1001	7507	5081	1223	6938	4693	1503	9545	6473	2333	9213	6221	2422	8300	6033	2645	7719	5907	2779
	24	32	5864	3706	1014	8019	5081	1237	7393	4693	1518	10209	6473	2333	9794	6221	2445	8632	6158	2712	7885	6096	2868

	INDOOR		OUTDOOR TEMPERATURE (°CDB)																				
	EWB	EDB	-10			21			27			32			35			40			43		
	°C	°C	TC	SHC	PI	TC	SHC	PI	TC	SHC	PI	TC	SHC	PI	TC	SHC	PI	TC	SHC	PI	TC	SHC	PI
1.5+1.8+6.0	12	18	5003	3560	960	5990	5017	1180	5544	4632	1593	7626	6407	2372	7347	6126	2461	6882	5774	2617	6603	5492	2706
	14	20	5003	3560	960	6436	5017	1180	5990	4680	1608	8184	6407	2394	7905	6196	2483	7347	5774	2639	7068	5563	2751
	16	22	5003	3788	974	6882	5017	1194	6372	4680	1623	8742	6407	2416	8463	6196	2528	7905	5774	2684	7626	5563	2773
	18	25	5365	4062	987	7328	5452	1208	6755	5066	1638	9300	6971	2439	8928	6689	2528	8370	6267	2706	7998	5985	2795
	19	27	5546	4199	1001	7583	5741	1223	7009	5307	1653	9672	7323	2461	9300	7041	2550	8742	6619	2706	8370	6337	2795
	22	30	6148	4153	1001	8411	5693	1223	7774	5259	1653	10695	7252	2483	10323	6971	2572	9300	6760	2795	8649	6619	2929
	24	32	6570	4153	1014	8985	5693	1237	8284	5259	1668	11439	7252	2483	10974	6971	2595	9672	6900	2862	8835	6830	3018
1.5+2.5+2.5	12	18	3497	2488	694	4186	3507	872	3875	3237	1027	5330	4478	1656	5135	4281	1728	4810	4035	1854	4615	3839	1926
	14	20	3497	2488	694	4498	3507	872	4186	3271	1039	5720	4478	1674	5525	4331	1746	5135	4035	1872	4940	3888	1962
	16	22	3497	2647	705	4810	3507	883	4454	3271	1052	6110	4478	1692	5915	4331	1782	5525	4035	1908	5330	3888	1980
	18	25	3750	2839	716	5122	3810	895	4721	3541	1064	6500	4872	1710	6240	4675	1782	5850	4380	1926	5590	4183	1998
	19	27	3876	2935	727	5300	4013	906	4899	3709	1076	6760	5118	1728	6500	4921	1800	6110	4626	1926	5850	4429	1998
	22	30	4297	2903	727	5879	3979	906	5434	3675	1076	7475	5069	1746	7215	4872	1818	6500	4724	1998	6045	4626	2106
	24	32	4592	2903	738	6280	3979	918	5790	3675	1088	7995	5069	1746	7670	4872	1836	6760	4823	2052	6175	4774	2178
1.5+2.5+3.5	12	18	4035	2871	810	4831	4046	1017	4471	3735	1199	6150	5167	1932	5925	4940	2016	5550	4656	2163	5325	4429	2247
	14	20	4035	2871	810	5190	4046	1017	4831	3774	1213	6600	5167	1953	6375	4997	2037	5925	4656	2184	5700	4486	2289
	16	22	4035	3055	823	5550	4046	1030	5139	3774	1227	7050	5167	1974	6825	4997	2079	6375	4656	2226	6150	4486	2310
	18	25	4326	3276	835	5910	4397	1044	5447	4085	1241	7500	5622	1995	7200	5394	2079	6750	5054	2247	6450	4827	2331
	19	27	4472	3386	848	6115	4630	1057	5653	4280	1255	7800	5905	2016	7500	5678	2100	7050	5338	2247	6750	5111	2331
	22	30	4958	3349	848	6783	4591	1057	6269	4241	1255	8625	5849	2037	8325	5622	2121	7500	5451	2331	6975	5338	2457
	24	32	5299	3349	861	7246	4591	1071	6681	4241	1269	9225	5849	2037	8850	5622	2142	7800	5565	2394	7125	5508	2541
1.5+2.5+4.2	12	18	4411	3139	849	5281	4424	1065	4888	4084	1256	6724	5650	2024	6478	5401	2112	6068	5091	2266	5822	4843	2354
	14	20	4411	3139	849	5675	4424	1065	5281	4126	1270	7216	5650	2046	6970	5463	2134	6478	5091	2288	6232	4905	2398
	16	22	4411	3340	862	6068	4424	1079	5619	4126	1285	7708	5650	2068	7462	5463	2178	6970	5091	2332	6724	4905	2420
	18	25	4730	3581	875	6461	4807	1093	5956	4467	1300	8200	6146	2090	7872	5898	2178	7380	5525	2354	7052	5277	2442
	19	27	4890	3702	888	6686	5062	1107	6180	4679	1315	8528	6457	2112	8200	6208	2200	7708	5836	2354	7380	5588	2442
	22	30	5421	3662	888	7416	5020	1107	6855	4637	1315	9430	6395	2134	9102	6146	2222	8200	5960	2442	7626	5836	2574
	24	32	5793	3662	902	7922	5020	1122	7304	4637	1330	10086	6395	2134	9676	6146	2244	8528	6084	2508	7790	6022	2662
1.5+2.5+5.0	12	18	4842	3445	1034	5797	4856	1298	5365	4482	1530	7380	6201	2466	7110	5928	2573	6660	5588	2760	6390	5315	2868
	14	20	4842	3445	1034	6228	4856	1298	5797	4529	1548	7920	6201	2492	7650	5996	2600	7110	5588	2787	6840	5383	2921
	16	22	4842	3666	1050	6660	4856	1315	6167	4529	1566	8460	6201	2519	8190	5996	2653	7650	5588	2841	7380	5383	2948
	18	25	5192	3931	1066	7092	5276	1332	6537	4902	1584	9000	6746	2546	8640	6473	2653	8100	6064	2868	7740	5792	2975
	19	27	5367	4063	1082	7338	5556	1349	6783	5136	1602	9360	7087	2573	9000	6814	2680	8460	6405	2868	8100	6133	2975
	22	30	5950	4019	1082	8140	5509	1349	7523	5089	1602	10350	7018	2600	9990	6746	2707	9000	6541	2975	8370	6405	3136
	24	32	6358	4019	1099	8695	5509	1366	8017	5089	1620	11070	7018	2600	10620	6746	2734	9360	6678	3055	8550	6610	3243
1.5+2.5+6.0	12	18	5380	3828	1134	6441	5395	1398	5961	4980	1630	8200	6890	2566	7900	6587	2673	7400	6208	2860	7100	5905	2968
	14	20	5380	3828	1134	6920	5395	1398	6441	5032	1648	8800	6890	2592	8500	6663	2700	7900	6208	2887	7600	5981	3021
	16	22	5380	4073	1150	7400	5395	1415	6852	5032	1666	9400	6890	2619	9100	6663	2753	8500	6208	2941	8200	5981	3048
	18	25	5769	4367	1166	7880	5862	1432	7263	5447	1684	10000	7495	2646	9600	7193	2753	9000	6738	2968	8600	6435	3075
	19	27	5963	4515	1182	8154	6173	1449	7537	5706	1702	10400	7874	2673	10000	7571	2780	9400	7117	2968	9000	6814	3075
	22	30	6611	4466	1182	9044	6121	1449	8359	5655	1702	11500	7798	2700	11100	7495	2807	10000	7268	3075	9300	7117	3236
	24	32	7065	4466	1199	9661	6121	1466	8907	5655	1720	12300	7798	2700	11800	7495	2834	10400	7420	3155	9500	7344	3343

	INDOOR		OUTDOOR TEMPERATURE (°CDB)																				
	EWB	EDB	-10			21			27			32			35			40			43		
	°C	°C	TC	SHC	PI	TC	SHC	PI	TC	SHC	PI	TC	SHC	PI	TC	SHC	PI	TC	SHC	PI	TC	SHC	PI
1.5+3.5+3.5	12	18	4573	3253	988	5475	4586	1240	5067	4233	1461	6970	5856	2355	6715	5599	2458	6290	5277	2637	6035	5020	2739
	14	20	4573	3253	988	5882	4586	1240	5475	4277	1478	7480	5856	2381	7225	5663	2483	6715	5277	2662	6460	5084	2790
	16	22	4573	3462	1003	6290	4586	1256	5824	4277	1496	7990	5856	2406	7735	5663	2534	7225	5277	2714	6970	5084	2816
	18	25	4903	3712	1018	6698	4983	1272	6174	4630	1513	8500	6371	2432	8160	6114	2534	7650	5728	2739	7310	5470	2842
	19	27	5069	3837	1034	6931	5247	1289	6406	4850	1530	8840	6693	2458	8500	6435	2560	7990	6049	2739	7650	5792	2842
	22	30	5619	3796	1034	7688	5203	1289	7105	4806	1530	9775	6629	2483	9435	6371	2586	8500	6178	2842	7905	6049	2995
	24	32	6005	3796	1049	8212	5203	1305	7571	4806	1547	10455	6629	2483	10030	6371	2611	8840	6307	2918	8075	6242	3098
1.5+3.5+4.2	12	18	4842	3445	1088	5797	4856	1340	5365	4482	1601	7380	6201	2495	7110	5928	2598	6660	5588	2777	6390	5315	2879
	14	20	4842	3445	1088	6228	4856	1340	5797	4529	1618	7920	6201	2521	7650	5996	2623	7110	5588	2802	6840	5383	2930
	16	22	4842	3666	1103	6660	4856	1356	6167	4529	1636	8460	6201	2546	8190	5996	2674	7650	5588	2854	7380	5383	2956
	18	25	5192	3931	1118	7092	5276	1372	6537	4902	1653	9000	6746	2572	8640	6473	2674	8100	6064	2879	7740	5792	2982
	19	27	5367	4063	1134	7338	5556	1389	6783	5136	1670	9360	7087	2598	9200	6814	2700	8460	6405	2879	8100	6133	2982
	22	30	5950	4019	1134	8140	5509	1389	7523	5089	1670	10350	7018	2623	9990	6746	2726	9000	6541	2982	8370	6405	3135
	24	32	6358	4019	1149	8695	5509	1405	8017	5089	1687	11070	7018	2623	10620	6746	2751	9360	6678	3058	8550	6610	3238
1.5+3.5+5.0	12	18	5142	3645	1188	6097	5056	1440	6165	5082	1901	8180	6801	2795	7910	6528	2898	7460	6188	3077	7190	5915	3179
	14	20	5142	3645	1188	6528	5056	1440	6597	5129	1918	8720	6801	2821	8450	6596	2923	7910	6188	3102	7640	5983	3230
	16	22	5142	3866	1203	6960	5056	1456	6967	5129	1936	9260	6801	2846	8990	6596	2974	8450	6188	3154	8180	5983	3256
	18	25	5492	4131	1218	7392	5476	1472	7337	5502	1953	9800	7346	2872	9440	7073	2974	8900	6664	3179	8540	6392	3282
	19	27	5667	4263	1234	7638	5756	1489	7583	5736	1970	10160	7687	2898	10000	7414	3000	9260	7005	3179	8900	6733	3282
	22	30	6250	4219	1234	8440	5709	1489	8323	5689	1970	11150	7618	2923	10790	7346	3026	9800	7141	3282	9170	7005	3435
	24	32	6658	4219	1249	8995	5709	1505	8817	5689	1987	11870	7618	2923	11420	7346	3051	10160	7278	3358	9350	7210	3538
1.5+3.5+6.0	12	18	5142	3645	1288	6097	5056	1540	6165	5082	2001	8180	6801	2895	7910	6528	2998	7460	6188	3177	7190	5915	3279
	14	20	5142	3645	1288	6528	5056	1540	6597	5129	2018	8720	6801	2921	8450	6596	3023	7910	6188	3202	7640	5983	3330
	16	22	5142	3866	1303	6960	5056	1556	6967	5129	2036	9260	6801	2946	8990	6596	3074	8450	6188	3254	8180	5983	3356
	18	25	5492	4131	1318	7392	5476	1572	7337	5502	2053	9800	7346	2972	9440	7073	3074	8900	6664	3279	8540	6392	3382
	19	27	5667	4263	1334	7638	5756	1589	7583	5736	2070	10160	7687	2998	10000	7414	3100	9260	7005	3279	8900	6733	3382
	22	30	6250	4219	1334	8440	5709	1589	8323	5689	2070	11150	7618	3023	10790	7346	3126	9800	7141	3382	9170	7005	3535
	24	32	6658	4219	1349	8995	5709	1605	8817	5689	2087	11870	7618	3023	11420	7346	3151	10160	7278	3458	9350	7210	3638
1.5+4.2+4.2	12	18	5042	3545	1188	5997	4956	1440	6065	4982	1901	8080	6701	2795	7810	6428	2898	7360	6088	3077	7090	5815	3179
	14	20	5042	3545	1188	6428	4956	1440	6497	5029	1918	8620	6701	2821	8350	6496	2923	7810	6088	3102	7540	5883	3230
	16	22	5042	3766	1203	6860	4956	1456	6867	5029	1936	9160	6701	2846	8890	6496	2974	8350	6088	3154	8080	5883	3256
	18	25	5392	4031	1218	7292	5376	1472	7237	5402	1953	9700	7246	2872	9340	6973	2974	8800	6564	3179	8440	6292	3282
	19	27	5567	4163	1234	7538	5656	1489	7483	5636	1970	10060	7587	2898	9900	7314	3000	9160	6905	3179	8800	6633	3282
	22	30	6150	4119	1234	8340	5609	1489	8223	5589	1970	11050	7518	2923	10690	7246	3026	9700	7041	3282	9070	6905	3435
	24	32	6558	4119	1249	8895	5609	1505	8717	5589	1987	11770	7518	2923	11320	7246	3051	10060	7178	3358	9250	7110	3538
1.5+4.2+5.0	12	18	5142	3645	1398	6097	5056	1650	6165	5082	2111	8180	6801	3005	7910	6528	3108	7460	6188	3287	7190	5915	3389
	14	20	5142	3645	1398	6528	5056	1650	6597	5129	2128	8720	6801	3031	8450	6596	3133	7910	6188	3312	7640	5983	3440
	16	22	5142	3866	1413	6960	5056	1666	6967	5129	2146	9260	6801	3056	8990	6596	3184	8450	6188	3364	8180	5983	3466
	18	25	5492	4131	1428	7392	5476	1682	7337	5502	2163	9800	7346	3082	9440	7073	3184	8900	6664	3389	8540	6392	3492
	19	27	5667	4263	1444	7638	5756	1699	7583	5736	2180	10160	7687	3108	10000	7414	3210	9260	7005	3389	8900	6733	3492
	22	30	6250	4219	1444	8440	5709	1699	8323	5689	2180	11150	7618	3133	10790	7346	3236	9800	7141	3492	9170	7005	3645
	24	32	6658	4219	1459	8995	5709	1715	8817	5689	2197	11870	7618	3133	11420	7346	3261	10160	7278	3568	9350	7210	3748

	INDOOR		OUTDOOR TEMPERATURE (°CDB)																				
	EWB	EDB	-10			21			27			32			35			40			43		
	°C	°C	TC	SHC	PI	TC	SHC	PI	TC	SHC	PI	TC	SHC	PI	TC	SHC	PI	TC	SHC	PI	TC	SHC	PI
1.5+4.2+6.0	12	18	5142	3645	1488	6097	5056	1740	6165	5082	2201	8180	6801	3095	7910	6528	3198	7460	6188	3377	7190	5915	3479
	14	20	5142	3645	1488	6528	5056	1740	6597	5129	2218	8720	6801	3121	8450	6596	3223	7910	6188	3402	7640	5983	3530
	16	22	5142	3866	1503	6960	5056	1756	6967	5129	2236	9260	6801	3146	8990	6596	3274	8450	6188	3454	8180	5983	3556
	18	25	5492	4131	1518	7392	5476	1772	7337	5502	2253	9800	7346	3172	9440	7073	3274	8900	6664	3479	8540	6392	3582
	19	27	5667	4263	1534	7638	5756	1789	7583	5736	2270	10160	7687	3198	10000	7414	3300	9260	7005	3479	8900	6733	3582
	22	30	6250	4219	1534	8440	5709	1789	8323	5689	2270	11150	7618	3223	10790	7346	3326	9800	7141	3582	9170	7005	3735
	24	32	6658	4219	1549	8995	5709	1805	8817	5689	2287	11870	7618	3223	11420	7346	3351	10160	7278	3658	9350	7210	3838
1.5+5.0+5.0	12	18	5142	3645	1688	6097	5056	1940	6165	5082	2401	8180	6801	3295	7910	6528	3398	7460	6188	3577	7190	5915	3679
	14	20	5142	3645	1688	6528	5056	1940	6597	5129	2418	8720	6801	3321	8450	6596	3423	7910	6188	3602	7640	5983	3730
	16	22	5142	3866	1703	6960	5056	1956	6967	5129	2436	9260	6801	3346	8990	6596	3474	8450	6188	3654	8180	5983	3756
	18	25	5492	4131	1718	7392	5476	1972	7337	5502	2453	9800	7346	3372	9440	7073	3474	8900	6664	3679	8540	6392	3782
	19	27	5667	4263	1734	7638	5756	1989	7583	5736	2470	10160	7687	3398	10000	7414	3500	9260	7005	3679	8900	6733	3782
	22	30	6250	4219	1734	8440	5709	1989	8323	5689	2470	11150	7618	3423	10790	7346	3526	9800	7141	3782	9170	7005	3935
	24	32	6658	4219	1749	8995	5709	2005	8817	5689	2487	11870	7618	3423	11420	7346	3551	10160	7278	3858	9350	7210	4038
1.5+5.0+6.0	12	18	5142	3645	1788	6097	5056	2040	6165	5082	2501	8180	6801	3395	7910	6528	3498	7460	6188	3677	7190	5915	3779
	14	20	5142	3645	1788	6528	5056	2040	6597	5129	2518	8720	6801	3421	8450	6596	3523	7910	6188	3702	7640	5983	3830
	16	22	5142	3866	1803	6960	5056	2056	6967	5129	2536	9260	6801	3446	8990	6596	3574	8450	6188	3754	8180	5983	3856
	18	25	5492	4131	1818	7392	5476	2072	7337	5502	2553	9800	7346	3472	9440	7073	3574	8900	6664	3779	8540	6392	3882
	19	27	5667	4263	1834	7638	5756	2089	7583	5736	2570	10160	7687	3498	10000	7414	3600	9260	7005	3779	8900	6733	3882
	22	30	6250	4219	1834	8440	5709	2089	8323	5689	2570	11150	7618	3523	10790	7346	3626	9800	7141	3882	9170	7005	4035
	24	32	6658	4219	1849	8995	5709	2105	8817	5689	2587	11870	7618	3523	11420	7346	3651	10160	7278	3958	9350	7210	4138
1.5+6.0+6.0	12	18	5142	3645	1868	6097	5056	2120	6165	5082	2581	8180	6801	3475	7910	6528	3578	7460	6188	3757	7190	5915	3859
	14	20	5142	3645	1868	6528	5056	2120	6597	5129	2598	8720	6801	3501	8450	6596	3603	7910	6188	3782	7640	5983	3910
	16	22	5142	3866	1883	6960	5056	2136	6967	5129	2616	9260	6801	3526	8990	6596	3654	8450	6188	3834	8180	5983	3936
	18	25	5492	4131	1898	7392	5476	2152	7337	5502	2633	9800	7346	3552	9440	7073	3654	8900	6664	3859	8540	6392	3962
	19	27	5667	4263	1914	7638	5756	2169	7583	5736	2650	10160	7687	3578	10000	7414	3680	9260	7005	3859	8900	6733	3962
	22	30	6250	4219	1914	8440	5709	2169	8323	5689	2650	11150	7618	3603	10790	7346	3706	9800	7141	3962	9170	7005	4115
	24	32	6658	4219	1929	8995	5709	2185	8817	5689	2667	11870	7618	3603	11420	7346	3731	10160	7278	4038	9350	7210	4218
1.8+1.8+1.8	12	18	2905	2067	571	3478	2913	717	3219	2689	845	4428	3720	1362	4266	3557	1421	3996	3353	1524	3834	3189	1584
	14	20	2905	2067	571	3737	2913	717	3478	2717	855	4752	3720	1376	4590	3598	1436	4266	3353	1539	4104	3230	1613
	16	22	2905	2199	580	3996	2913	726	3700	2717	865	5076	3720	1391	4914	3598	1465	4590	3353	1569	4428	3230	1628
	18	25	3115	2358	589	4255	3165	736	3922	2941	875	5400	4048	1406	5184	3884	1465	4860	3639	1584	4644	3475	1643
	19	27	3220	2438	598	4403	3334	745	4070	3081	884	5616	4252	1421	5400	4088	1480	5076	3843	1584	4860	3680	1643
	22	30	3570	2411	598	4884	3306	745	4514	3053	884	6210	4211	1436	5994	4048	1495	5400	3925	1643	5022	3843	1732
	24	32	3815	2411	607	5217	3306	754	4810	3053	894	6642	4211	1436	6372	4048	1510	5616	4007	1687	5130	3966	1791
1.8+1.8+2.5	12	18	3282	2335	687	3929	3291	862	3636	3038	1016	5002	4203	1638	4819	4018	1709	4514	3787	1833	4331	3602	1905
	14	20	3282	2335	687	4221	3291	862	3929	3070	1028	5368	4203	1655	5185	4064	1727	4819	3787	1851	4636	3649	1940
	16	22	3282	2485	697	4514	3291	873	4180	3070	1040	5734	4203	1673	5551	4064	1762	5185	3787	1887	5002	3649	1958
	18	25	3519	2664	708	4807	3576	885	4430	3323	1052	6100	4572	1691	5856	4387	1762	5490	4110	1905	5246	3926	1976
	19	27	3637	2754	719	4974	3766	896	4598	3481	1064	6344	4803	1709	6100	4618	1780	5734	4341	1905	5490	4157	1976
	22	30	4033	2724	719	5517	3734	896	5099	3449	1064	7015	4757	1727	6771	4572	1798	6100	4434	1976	5673	4341	2083
	24	32	4310	2724	730	5893	3734	907	5434	3449	1076	7503	4757	1727	7198	4572	1816	6344	4526	2029	5795	4480	2154

	INDOOR		OUTDOOR TEMPERATURE (°CDB)																				
	EWB	EDB	-10			21			27			32			35			40			43		
	°C	°C	TC	SHC	PI	TC	SHC	PI	TC	SHC	PI	TC	SHC	PI	TC	SHC	PI	TC	SHC	PI	TC	SHC	PI
1.8+1.8+3.5	12	18	3820	2718	787	4573	3831	975	4232	3536	1230	5822	4892	1897	5609	4677	1974	5254	4408	2107	5041	4193	2184
	14	20	3820	2718	787	4913	3831	975	4573	3573	1243	6248	4892	1916	6035	4730	1993	5609	4408	2126	5396	4247	2222
	16	22	3820	2892	798	5254	3831	987	4865	3573	1256	6674	4892	1935	6461	4730	2031	6035	4408	2165	5822	4247	2241
	18	25	4096	3101	810	5595	4162	999	5157	3867	1269	7100	5322	1955	6816	5107	2031	6390	4784	2184	6106	4569	2260
	19	27	4234	3205	821	5789	4383	1012	5351	4052	1281	7384	5591	1974	7100	5376	2050	6674	5053	2184	6390	4838	2260
	22	30	4694	3171	821	6422	4346	1012	5935	4015	1281	8165	5537	1993	7881	5322	2069	7100	5160	2260	6603	5053	2375
	24	32	5016	3171	833	6859	4346	1024	6324	4015	1294	8733	5537	1993	8378	5322	2088	7384	5268	2317	6745	5214	2451
1.8+1.8+4.2	12	18	4196	2986	837	5024	4208	1025	4650	3885	1430	6396	5374	2097	6162	5138	2174	5772	4843	2307	5538	4606	2384
	14	20	4196	2986	837	5398	4208	1025	5024	3925	1443	6864	5374	2116	6630	5197	2193	6162	4843	2326	5928	4665	2422
	16	22	4196	3177	848	5772	4208	1037	5344	3925	1456	7332	5374	2135	7098	5197	2231	6630	4843	2365	6396	4665	2441
	18	25	4499	3407	860	6146	4572	1049	5665	4249	1469	7800	5846	2155	7488	5610	2231	7020	5256	2384	6708	5020	2460
	19	27	4651	3521	871	6360	4815	1062	5879	4451	1481	8112	6142	2174	7800	5905	2250	7332	5551	2384	7020	5315	2460
	22	30	5157	3483	871	7055	4775	1062	6520	4411	1481	8970	6083	2193	8658	5846	2269	7800	5669	2460	7254	5551	2575
	24	32	5511	3483	883	7536	4775	1074	6948	4411	1494	9594	6083	2193	9204	5846	2288	8112	5787	2517	7410	5728	2651
1.8+1.8+5.0	12	18	4673	3253	1022	5575	4586	1283	5167	4233	1513	7070	5856	2438	6815	5599	2544	6390	5277	2730	6135	5020	2836
	14	20	4673	3253	1022	5982	4586	1283	5575	4277	1530	7580	5856	2465	7325	5663	2571	6815	5277	2756	6560	5084	2889
	16	22	4673	3462	1038	6390	4586	1300	5924	4277	1548	8090	5856	2491	7835	5663	2624	7325	5277	2809	7070	5084	2915
	18	25	5003	3712	1054	6798	4983	1317	6274	4630	1566	8600	6371	2518	8260	6114	2624	7750	5728	2836	7410	5470	2942
	19	27	5169	3837	1070	7031	5247	1334	6506	4850	1584	8940	6693	2544	8600	6435	2650	8090	6049	2836	7750	5792	2942
	22	30	5719	3796	1070	7788	5203	1334	7205	4806	1584	9875	6629	2571	9535	6371	2677	8600	6178	2942	8005	6049	3101
	24	32	6105	3796	1086	8312	5203	1351	7671	4806	1601	10555	6629	2571	10130	6371	2703	8940	6307	3021	8175	6242	3207
1.8+1.8+6.0	12	18	4942	3445	1088	5697	4756	1090	5765	4782	1551	7780	6501	2445	7510	6228	2548	7060	5888	2727	6790	5615	2829
	14	20	4942	3445	1088	6128	4756	1090	6197	4829	1568	8320	6501	2471	8050	6296	2573	7510	5888	2752	7240	5683	2880
	16	22	4942	3666	1103	6560	4756	1106	6567	4829	1586	8860	6501	2496	8590	6296	2624	8050	5888	2804	7780	5683	2906
	18	25	5292	3931	1118	6992	5176	1122	6937	5202	1603	9400	7046	2522	9040	6773	2624	8500	6364	2829	8140	6092	2932
	19	27	5467	4063	1134	7238	5456	1139	7183	5436	1620	9760	7387	2548	9600	7114	2650	8860	6705	2829	8500	6433	2932
	22	30	6050	4019	1134	8040	5409	1139	7923	5389	1620	10750	7318	2573	10390	7046	2676	9400	6841	2932	8770	6705	3085
	24	32	6458	4019	1149	8595	5409	1155	8417	5389	1637	11470	7318	2573	11020	7046	2701	9760	6978	3008	8950	6910	3188
1.8+2.5+2.5	12	18	3658	2603	718	4380	3669	901	4054	3386	1062	5576	4685	1711	5372	4479	1786	5032	4222	1916	4828	4016	1990
	14	20	3658	2603	718	4706	3669	901	4380	3422	1074	5984	4685	1730	5780	4531	1804	5372	4222	1934	5168	4067	2027
	16	22	3658	2770	729	5032	3669	913	4659	3422	1087	6392	4685	1748	6188	4531	1841	5780	4222	1972	5576	4067	2046
	18	25	3923	2970	740	5358	3986	924	4939	3704	1099	6800	5097	1767	6528	4891	1841	6120	4582	1990	5848	4376	2065
	19	27	4055	3070	751	5545	4198	936	5125	3880	1112	7072	5354	1786	6800	5148	1860	6392	4839	1990	6120	4634	2065
	22	30	4496	3037	751	6150	4163	936	5684	3845	1112	7820	5303	1804	7548	5097	1879	6800	4942	2065	6324	4839	2176
	24	32	4804	3037	762	6570	4163	948	6057	3845	1124	8364	5303	1804	8024	5097	1897	7072	5045	2120	6460	4994	2251
1.8+2.5+3.5	12	18	4196	2986	905	5024	4208	1121	4650	3885	1310	6396	5374	2075	6162	5138	2162	5772	4843	2316	5538	4606	2403
	14	20	4196	2986	905	5398	4208	1121	5024	3925	1325	6864	5374	2097	6630	5197	2184	6162	4843	2338	5928	4665	2447
	16	22	4196	3177	918	5772	4208	1135	5344	3925	1339	7332	5374	2119	7098	5197	2228	6630	4843	2381	6396	4665	2469
	18	25	4499	3407	931	6146	4572	1149	5665	4249	1354	7800	5846	2141	7488	5610	2228	7020	5256	2403	6708	5020	2491
	19	27	4651	3521	944	6360	4815	1162	5879	4451	1369	8112	6142	2162	7800	5905	2250	7332	5551	2403	7020	5315	2491
	22	30	5157	3483	944	7055	4775	1162	6520	4411	1369	8970	6083	2184	8658	5846	2272	7800	5669	2491	7254	5551	2622
	24	32	5511	3483	958	7536	4775	1176	6948	4411	1383	9594	6083	2184	9204	5846	2294	8112	5787	2557	7410	5728	2710

	INDOOR		OUTDOOR TEMPERATURE (°CDB)																				
	EWB	EDB	-10			21			27			32			35			40			43		
	°C	°C	TC	SHC	PI	TC	SHC	PI	TC	SHC	PI	TC	SHC	PI	TC	SHC	PI	TC	SHC	PI	TC	SHC	PI
1.8+2.5+4.2	12	18	4573	3253	905	5475	4586	1121	5067	4233	1510	6970	5856	2275	6715	5599	2362	6290	5277	2516	6035	5020	2603
	14	20	4573	3253	905	5882	4586	1121	5475	4277	1525	7480	5856	2297	7225	5663	2384	6715	5277	2538	6460	5084	2647
	16	22	4573	3462	918	6290	4586	1135	5824	4277	1539	7990	5856	2319	7735	5663	2428	7225	5277	2581	6970	5084	2669
	18	25	4903	3712	931	6698	4983	1149	6174	4630	1554	8500	6371	2341	8160	6114	2428	7650	5728	2603	7310	5470	2691
	19	27	5069	3837	944	6931	5247	1162	6406	4850	1569	8840	6693	2362	8500	6435	2450	7990	6049	2603	7650	5792	2691
	22	30	5619	3796	944	7688	5203	1162	7105	4806	1569	9775	6629	2384	9435	6371	2472	8500	6178	2691	7905	6049	2822
	24	32	6005	3796	958	8212	5203	1176	7571	4806	1583	10455	6629	2384	10030	6371	2494	8840	6307	2757	8075	6242	2910
1.8+2.5+5.0	12	18	4642	3145	1188	5397	4456	1190	5465	4482	1651	7480	6201	2545	7210	5928	2648	6760	5588	2827	6490	5315	2929
	14	20	4642	3145	1188	5828	4456	1190	5897	4529	1668	8020	6201	2571	7750	5996	2673	7210	5588	2852	6940	5383	2980
	16	22	4642	3366	1203	6260	4456	1206	6267	4529	1686	8560	6201	2596	8290	5996	2724	7750	5588	2904	7480	5383	3006
	18	25	4992	3631	1218	6692	4876	1222	6637	4902	1703	9100	6746	2622	8740	6473	2724	8200	6064	2929	7840	5792	3032
	19	27	5167	3763	1234	6938	5156	1239	6883	5136	1720	9460	7087	2648	9300	6814	2750	8560	6405	2929	8200	6133	3032
	22	30	5750	3719	1234	7740	5109	1239	7623	5089	1720	10450	7018	2673	10090	6746	2776	9100	6541	3032	8470	6405	3185
	24	32	6158	3719	1249	8295	5109	1255	8117	5089	1737	11170	7018	2673	10720	6746	2801	9460	6678	3108	8650	6610	3288
1.8+2.5+6.0	12	18	5142	3645	1038	6097	5056	1290	6165	5082	1751	8180	6801	2645	7910	6528	2748	7460	6188	2927	7190	5915	3029
	14	20	5142	3645	1038	6528	5056	1290	6597	5129	1768	8720	6801	2671	8450	6596	2773	7910	6188	2952	7640	5983	3080
	16	22	5142	3866	1053	6960	5056	1306	6967	5129	1786	9260	6801	2696	8990	6596	2824	8450	6188	3004	8180	5983	3106
	18	25	5492	4131	1068	7392	5476	1322	7337	5502	1803	9800	7346	2722	9440	7073	2824	8900	6664	3029	8540	6392	3132
	19	27	5667	4263	1084	7638	5756	1339	7583	5736	1820	10160	7687	2748	10000	7414	2850	9260	7005	3029	8900	6733	3132
	22	30	6250	4219	1084	8440	5709	1339	8323	5689	1820	11150	7618	2773	10790	7346	2876	9800	7141	3132	9170	7005	3285
	24	32	6658	4219	1099	8995	5709	1355	8817	5689	1837	11870	7618	2773	11420	7346	2901	10160	7278	3208	9350	7210	3388
1.8+3.5+3.5	12	18	4873	3453	1003	5775	4786	1259	5367	4433	1484	7270	6056	2392	7015	5799	2496	6590	5477	2678	6335	5220	2782
	14	20	4873	3453	1003	6182	4786	1259	5775	4477	1501	7780	6056	2418	7525	5863	2522	7015	5477	2704	6760	5284	2834
	16	22	4873	3662	1019	6590	4786	1276	6124	4477	1519	8290	6056	2444	8035	5863	2574	7525	5477	2756	7270	5284	2860
	18	25	5203	3912	1034	6998	5183	1292	6474	4830	1536	8800	6571	2470	8460	6314	2574	7950	5928	2782	7610	5670	2886
	19	27	5369	4037	1050	7231	5447	1309	6706	5050	1554	9140	6893	2496	8800	6635	2600	8290	6249	2782	7950	5992	2886
	22	30	5919	3996	1050	7988	5403	1309	7405	5006	1554	10075	6829	2522	9735	6571	2626	8800	6378	2886	8205	6249	3042
	24	32	6305	3996	1066	8512	5403	1325	7871	5006	1571	10755	6829	2522	10330	6571	2652	9140	6507	2964	8375	6442	3146
1.8+3.5+4.2	12	18	4642	3245	988	5597	5456	1240	5665	4682	1701	7680	6401	2595	7410	6128	2698	6960	6588	2877	6690	5515	2979
	14	20	4642	3245	988	6028	5456	1240	6097	4729	1718	8220	6401	2621	7950	6196	2723	7410	6588	2902	7140	5583	3030
	16	22	4642	3466	1003	6460	5456	1256	6467	4729	1736	8760	6401	2646	8490	6196	2774	7950	6588	2954	7680	5583	3056
	18	25	4992	3731	1018	6892	5876	1272	6837	5102	1753	9300	6946	2672	8940	6673	2774	8400	7064	2979	8040	5992	3082
	19	27	5167	3863	1034	7138	6156	1289	7083	5336	1770	9660	7287	2698	9500	7014	2800	8760	7405	2979	8400	6333	3082
	22	30	5750	3819	1034	7940	6109	1289	7823	5289	1770	10650	7218	2723	10290	6946	2826	9300	7541	3082	8670	6605	3235
	24	32	6158	3819	1049	8495	6109	1305	8317	5289	1787	11370	7218	2723	10920	6946	2851	9660	7678	3158	8850	6810	3338
1.8+3.5+5.0	12	18	5142	3645	1268	6097	5056	1520	6165	5082	1981	8180	6801	2875	7910	6528	2978	7460	6188	3157	7190	5915	3259
	14	20	5142	3645	1268	6528	5056	1520	6597	5129	1998	8720	6801	2901	8450	6596	3003	7910	6188	3182	7640	5983	3310
	16	22	5142	3866	1283	6960	5056	1536	6967	5129	2016	9260	6801	2926	8990	6596	3054	8450	6188	3234	8180	5983	3336
	18	25	5492	4131	1298	7392	5476	1552	7337	5502	2033	9800	7346	2952	9440	7073	3054	8900	6664	3259	8540	6392	3362
	19	27	5667	4263	1314	7638	5756	1569	7583	5736	2050	10160	7687	2978	10000	7414	3080	9260	7005	3259	8900	6733	3362
	22	30	6250	4219	1314	8440	5709	1569	8323	5689	2050	11150	7618	3003	10790	7346	3106	9800	7141	3362	9170	7005	3515
	24	32	6658	4219	1329	8995	5709	1585	8817	5689	2067	11870	7618	3003	11420	7346	3131	10160	7278	3438	9350	7210	3618

	INDOOR		OUTDOOR TEMPERATURE (°CDB)																				
	EWB	EDB	-10			21			27			32			35			40			43		
	°C	°C	TC	SHC	PI	TC	SHC	PI	TC	SHC	PI	TC	SHC	PI	TC	SHC	PI	TC	SHC	PI	TC	SHC	PI
1.8+3.5+6.0	12	18	5142	3645	1768	6097	5056	2020	6165	5082	2901	8180	6801	3795	7910	6528	3898	7460	6188	4077	7190	5915	4179
	14	20	5142	3645	1768	6528	5056	2020	6597	5129	2918	8720	6801	3821	8450	6596	3923	7910	6188	4102	7640	5983	4230
	16	22	5142	3866	1783	6960	5056	2036	6967	5129	2936	9260	6801	3846	8990	6596	3974	8450	6188	4154	8180	5983	4256
	18	25	5492	4131	1798	7392	5476	2052	7337	5502	2953	9800	7346	3872	9440	7073	3974	8900	6664	4179	8540	6392	4282
	19	27	5667	4263	1814	7638	5756	2069	7583	5736	2970	10160	7687	3898	10000	7414	4000	9260	7005	4179	8900	6733	4282
	22	30	6250	4219	1814	8440	5709	2069	8323	5689	2970	11150	7618	3923	10790	7346	4026	9800	7141	4282	9170	7005	4435
	24	32	6658	4219	1829	8995	5709	2085	8817	5689	2987	11870	7618	3923	11420	7346	4051	10160	7278	4358	9350	7210	4538
1.8+4.2+4.2	12	18	5142	3645	1188	6097	5056	1440	6165	5082	1901	8180	6801	2795	7910	6528	2898	7460	6188	3077	7190	5915	3179
	14	20	5142	3645	1188	6528	5056	1440	6597	5129	1918	8720	6801	2821	8450	6596	2923	7910	6188	3102	7640	5983	3230
	16	22	5142	3866	1203	6960	5056	1456	6967	5129	1936	9260	6801	2846	8990	6596	2974	8450	6188	3154	8180	5983	3256
	18	25	5492	4131	1218	7392	5476	1472	7337	5502	1953	9800	7346	2872	9440	7073	2974	8900	6664	3179	8540	6392	3282
	19	27	5667	4263	1234	7638	5756	1489	7583	5736	1970	10160	7687	2898	10000	7414	3000	9260	7005	3179	8900	6733	3282
	22	30	6250	4219	1234	8440	5709	1489	8323	5689	1970	11150	7618	2923	10790	7346	3026	9800	7141	3282	9170	7005	3435
	24	32	6658	4219	1249	8995	5709	1505	8817	5689	1987	11870	7618	2923	11420	7346	3051	10160	7278	3358	9350	7210	3538
1.8+4.2+5.0	12	18	5142	3645	1478	6097	5056	1730	6165	5082	2191	8180	6801	3085	7910	6528	3188	7460	6188	3367	7190	5915	3469
	14	20	5142	3645	1478	6528	5056	1730	6597	5129	2208	8720	6801	3111	8450	6596	3213	7910	6188	3392	7640	5983	3520
	16	22	5142	3866	1493	6960	5056	1746	6967	5129	2226	9260	6801	3136	8990	6596	3264	8450	6188	3444	8180	5983	3546
	18	25	5492	4131	1508	7392	5476	1762	7337	5502	2243	9800	7346	3162	9440	7073	3264	8900	6664	3469	8540	6392	3572
	19	27	5667	4263	1524	7638	5756	1779	7583	5736	2260	10160	7687	3188	10000	7414	3290	9260	7005	3469	8900	6733	3572
	22	30	6250	4219	1524	8440	5709	1779	8323	5689	2260	11150	7618	3213	10790	7346	3316	9800	7141	3572	9170	7005	3725
	24	32	6658	4219	1539	8995	5709	1795	8817	5689	2277	11870	7618	3213	11420	7346	3341	10160	7278	3648	9350	7210	3828
1.8+4.2+6.0	12	18	5142	3645	1588	6097	5056	1840	6165	5082	2301	8180	6801	3195	7910	6528	3298	7460	6188	3477	7190	5915	3579
	14	20	5142	3645	1588	6528	5056	1840	6597	5129	2318	8720	6801	3221	8450	6596	3323	7910	6188	3502	7640	5983	3630
	16	22	5142	3866	1603	6960	5056	1856	6967	5129	2336	9260	6801	3246	8990	6596	3374	8450	6188	3554	8180	5983	3656
	18	25	5492	4131	1618	7392	5476	1872	7337	5502	2353	9800	7346	3272	9440	7073	3374	8900	6664	3579	8540	6392	3682
	19	27	5667	4263	1634	7638	5756	1889	7583	5736	2370	10160	7687	3298	10000	7414	3400	9260	7005	3579	8900	6733	3682
	22	30	6250	4219	1634	8440	5709	1889	8323	5689	2370	11150	7618	3323	10790	7346	3426	9800	7141	3682	9170	7005	3835
	24	32	6658	4219	1649	8995	5709	1905	8817	5689	2387	11870	7618	3323	11420	7346	3451	10160	7278	3758	9350	7210	3938
1.8+5.0+5.0	12	18	5142	3645	1768	6097	5056	2020	6165	5082	2481	8180	6801	3375	7910	6528	3478	7460	6188	3657	7190	5915	3759
	14	20	5142	3645	1768	6528	5056	2020	6597	5129	2498	8720	6801	3401	8450	6596	3503	7910	6188	3682	7640	5983	3810
	16	22	5142	3866	1783	6960	5056	2036	6967	5129	2516	9260	6801	3426	8990	6596	3554	8450	6188	3734	8180	5983	3836
	18	25	5492	4131	1798	7392	5476	2052	7337	5502	2533	9800	7346	3452	9440	7073	3554	8900	6664	3759	8540	6392	3862
	19	27	5667	4263	1814	7638	5756	2069	7583	5736	2550	10160	7687	3478	10000	7414	3580	9260	7005	3759	8900	6733	3862
	22	30	6250	4219	1814	8440	5709	2069	8323	5689	2550	11150	7618	3503	10790	7346	3606	9800	7141	3862	9170	7005	4015
	24	32	6658	4219	1829	8995	5709	2085	8817	5689	2567	11870	7618	3503	11420	7346	3631	10160	7278	3938	9350	7210	4118
1.8+5.0+6.0	12	18	5142	3645	1868	6097	5056	2120	6165	5082	2581	8180	6801	3475	7910	6528	3578	7460	6188	3757	7190	5915	3859
	14	20	5142	3645	1868	6528	5056	2120	6597	5129	2598	8720	6801	3501	8450	6596	3603	7910	6188	3782	7640	5983	3910
	16	22	5142	3866	1883	6960	5056	2136	6967	5129	2616	9260	6801	3526	8990	6596	3654	8450	6188	3834	8180	5983	3936
	18	25	5492	4131	1898	7392	5476	2152	7337	5502	2633	9800	7346	3552	9440	7073	3654	8900	6664	3859	8540	6392	3962
	19	27	5667	4263	1914	7638	5756	2169	7583	5736	2650	10160	7687	3578	10000	7414	3680	9260	7005	3859	8900	6733	3962
	22	30	6250	4219	1914	8440	5709	2169	8323	5689	2650	11150	7618	3603	10790	7346	3706	9800	7141	3962	9170	7005	4115
	24	32	6658	4219	1929	8995	5709	2185	8817	5689	2667	11870	7618	3603	11420	7346	3731	10160	7278	4038	9350	7210	4218

	INDOOR		OUTDOOR TEMPERATURE (°CDB)																				
	EWB	EDB	-10			21			27			32			35			40			43		
	°C	°C	TC	SHC	PI	TC	SHC	PI	TC	SHC	PI	TC	SHC	PI	TC	SHC	PI	TC	SHC	PI	TC	SHC	PI
1.8+6.0+6.0	12	18	5142	3645	1968	6097	5056	2220	6165	5082	2681	8180	6801	3575	7910	6528	3678	7460	6188	3857	7190	5915	3959
	14	20	5142	3645	1968	6528	5056	2220	6597	5129	2698	8720	6801	3601	8450	6596	3703	7910	6188	3882	7640	5983	4010
	16	22	5142	3866	1983	6960	5056	2236	6967	5129	2716	9260	6801	3626	8990	6596	3754	8450	6188	3934	8180	5983	4036
	18	25	5492	4131	1998	7392	5476	2252	7337	5502	2733	9800	7346	3652	9440	7073	3754	8900	6664	3959	8540	6392	4062
	19	27	5667	4263	2014	7638	5756	2269	7583	5736	2750	10160	7687	3678	10000	7414	3780	9260	7005	3959	8900	6733	4062
	22	30	6250	4219	2014	8440	5709	2269	8323	5689	2750	11150	7618	3703	10790	7346	3806	9800	7141	4062	9170	7005	4215
	24	32	6658	4219	2029	8995	5709	2285	8817	5689	2767	11870	7618	3703	11420	7346	3831	10160	7278	4138	9350	7210	4318
2.5+2.5+2.5	12	18	4035	2871	818	4831	4046	1027	4471	3735	1210	6150	5167	1950	5925	4940	2035	5550	4656	2184	5325	4429	2268
	14	20	4035	2871	818	5190	4046	1027	4831	3774	1224	6600	5167	1972	6375	4997	2056	5925	4656	2205	5700	4486	2311
	16	22	4035	3055	831	5550	4046	1040	5139	3774	1238	7050	5167	1993	6825	4997	2099	6375	4656	2247	6150	4486	2332
	18	25	4326	3276	843	5910	4397	1054	5447	4085	1253	7500	5622	2014	7200	5394	2099	6750	5054	2268	6450	4827	2353
	19	27	4472	3386	856	6115	4630	1067	5653	4280	1267	7800	5905	2035	7500	5678	2120	7050	5338	2268	6750	5111	2353
	22	30	4958	3349	856	6783	4591	1067	6269	4241	1267	8625	5849	2056	8325	5622	2141	7500	5451	2353	6975	5338	2480
	24	32	5299	3349	869	7246	4591	1081	6681	4241	1281	9225	5849	2056	8850	5622	2162	7800	5565	2417	7125	5508	2565
2.5+2.5+3.5	12	18	4573	3253	988	5475	4586	1240	5067	4233	1461	6970	5856	2355	6715	5599	2458	6290	5277	2637	6035	5020	2739
	14	20	4573	3253	988	5882	4586	1240	5475	4277	1478	7480	5856	2381	7225	5663	2483	6715	5277	2662	6460	5084	2790
	16	22	4573	3462	1003	6290	4586	1256	5824	4277	1496	7990	5856	2406	7735	5663	2534	7225	5277	2714	6970	5084	2816
	18	25	4903	3712	1018	6698	4983	1272	6174	4630	1513	8500	6371	2432	8160	6114	2534	7650	5728	2739	7310	5470	2842
	19	27	5069	3837	1034	6931	5247	1289	6406	4850	1530	8840	6693	2458	8500	6435	2560	7990	6049	2739	7650	5792	2842
	22	30	5619	3796	1034	7688	5203	1289	7105	4806	1530	9775	6629	2483	9435	6371	2586	8500	6178	2842	7905	6049	2995
	24	32	6005	3796	1049	8212	5203	1305	7571	4806	1547	10455	6629	2483	10030	6371	2611	8840	6307	2918	8075	6242	3098
2.5+2.5+4.2	12	18	4342	3045	838	5297	4456	1090	5365	4482	1551	7380	6201	2445	7110	5928	2548	6660	5588	2727	6390	5315	2829
	14	20	4342	3045	838	5728	4456	1090	5797	4529	1568	7920	6201	2471	7650	5996	2573	7110	5588	2752	6840	5383	2880
	16	22	4342	3266	853	6160	4456	1106	6167	4529	1586	8460	6201	2496	8190	5996	2624	7650	5588	2804	7380	5383	2906
	18	25	4692	3531	868	6592	4876	1122	6537	4902	1603	9000	6746	2522	8640	6473	2624	8100	6064	2829	7740	5792	2932
	19	27	4867	3663	884	6838	5156	1139	6783	5136	1620	9360	7087	2548	9200	6814	2650	8460	6405	2829	8100	6133	2932
	22	30	5450	3619	884	7640	5109	1139	7523	5089	1620	10350	7018	2573	9990	6746	2676	9000	6541	2932	8370	6405	3085
	24	32	5858	3619	899	8195	5109	1155	8017	5089	1637	11070	7018	2573	10620	6746	2701	9360	6678	3008	8550	6610	3188
2.5+2.5+5.0	12	18	5142	3645	1188	6097	5056	1440	6165	5082	1901	8180	6801	2795	7910	6528	2898	7460	6188	3077	7190	5915	3179
	14	20	5142	3645	1188	6528	5056	1440	6597	5129	1918	8720	6801	2821	8450	6596	2923	7910	6188	3102	7640	5983	3230
	16	22	5142	3866	1203	6960	5056	1456	6967	5129	1936	9260	6801	2846	8990	6596	2974	8450	6188	3154	8180	5983	3256
	18	25	5492	4131	1218	7392	5476	1472	7337	5502	1953	9800	7346	2872	9440	7073	2974	8900	6664	3179	8540	6392	3282
	19	27	5667	4263	1234	7638	5756	1489	7583	5736	1970	10160	7687	2898	10000	7414	3000	9260	7005	3179	8900	6733	3282
	22	30	6250	4219	1234	8440	5709	1489	8323	5689	1970	11150	7618	2923	10790	7346	3026	9800	7141	3282	9170	7005	3435
	24	32	6658	4219	1249	8995	5709	1505	8817	5689	1987	11870	7618	2923	11420	7346	3051	10160	7278	3358	9350	7210	3538
2.5+2.5+6.0	12	18	5142	3645	1188	6097	5056	1440	6165	5082	1901	8180	6801	2795	7910	6528	2898	7460	6188	3077	7190	5915	3179
	14	20	5142	3645	1188	6528	5056	1440	6597	5129	1918	8720	6801	2821	8450	6596	2923	7910	6188	3102	7640	5983	3230
	16	22	5142	3866	1203	6960	5056	1456	6967	5129	1936	9260	6801	2846	8990	6596	2974	8450	6188	3154	8180	5983	3256
	18	25	5492	4131	1218	7392	5476	1472	7337	5502	1953	9800	7346	2872	9440	7073	2974	8900	6664	3179	8540	6392	3282
	19	27	5667	4263	1234	7638	5756	1489	7583	5736	1970	10160	7687	2898	10000	7414	3000	9260	7005	3179	8900	6733	3282
	22	30	6250	4219	1234	8440	5709	1489	8323	5689	1970	11150	7618	2923	10790	7346	3026	9800	7141	3282	9170	7005	3435
	24	32	6658	4219	1249	8995	5709	1505	8817	5689	1987	11870	7618	2923	11420	7346	3051	10160	7278	3358	9350	7210	3538

	INDOOR		OUTDOOR TEMPERATURE (°CDB)																				
	EWB	EDB	-10			21			27			32			35			40			43		
	°C	°C	TC	SHC	PI	TC	SHC	PI	TC	SHC	PI	TC	SHC	PI	TC	SHC	PI	TC	SHC	PI	TC	SHC	PI
2.5+3.5+3.5	12	18	4642	3145	988	5597	4556	1240	5665	4582	1701	7680	6301	2595	7410	6028	2698	6960	5688	2877	6690	5415	2979
	14	20	4642	3145	988	6028	4556	1240	6097	4629	1718	8220	6301	2621	7950	6096	2723	7410	5688	2902	7140	5483	3030
	16	22	4642	3366	1003	6460	4556	1256	6467	4629	1736	8760	6301	2646	8490	6096	2774	7950	5688	2954	7680	5483	3056
	18	25	4992	3631	1018	6892	4976	1272	6837	5002	1753	9300	6846	2672	8940	6573	2774	8400	6164	2979	8040	5892	3082
	19	27	5167	3763	1034	7138	5256	1289	7083	5236	1770	9660	7187	2698	9500	6914	2800	8760	6505	2979	8400	6233	3082
	22	30	5750	3719	1034	7940	5209	1289	7823	5189	1770	10650	7118	2723	10290	6846	2826	9300	6641	3082	8670	6505	3235
	24	32	6158	3719	1049	8495	5209	1305	8317	5189	1787	11370	7118	2723	10920	6846	2851	9660	6778	3158	8850	6710	3338
2.5+3.5+4.2	12	18	5142	3645	1188	6097	5056	1440	6165	5082	1901	8180	6801	2795	7910	6528	2898	7460	6188	3077	7190	5915	3179
	14	20	5142	3645	1188	6528	5056	1440	6597	5129	1918	8720	6801	2821	8450	6596	2923	7910	6188	3102	7640	5983	3230
	16	22	5142	3866	1203	6960	5056	1456	6967	5129	1936	9260	6801	2846	8990	6596	2974	8450	6188	3154	8180	5983	3256
	18	25	5492	4131	1218	7392	5476	1472	7337	5502	1953	9800	7346	2872	9440	7073	2974	8900	6664	3179	8540	6392	3282
	19	27	5667	4263	1234	7638	5756	1489	7583	5736	1970	10160	7687	2898	10000	7414	3000	9260	7005	3179	8900	6733	3282
	22	30	6250	4219	1234	8440	5709	1489	8323	5689	1970	11150	7618	2923	10790	7346	3026	9800	7141	3282	9170	7005	3435
	24	32	6658	4219	1249	8995	5709	1505	8817	5689	1987	11870	7618	2923	11420	7346	3051	10160	7278	3358	9350	7210	3538
2.5+3.5+5.0	12	18	5142	3645	1468	6097	5056	1720	6165	5082	2181	8180	6801	3075	7910	6528	3178	7460	6188	3357	7190	5915	3459
	14	20	5142	3645	1468	6528	5056	1720	6597	5129	2198	8720	6801	3101	8450	6596	3203	7910	6188	3382	7640	5983	3510
	16	22	5142	3866	1483	6960	5056	1736	6967	5129	2216	9260	6801	3126	8990	6596	3254	8450	6188	3434	8180	5983	3536
	18	25	5492	4131	1498	7392	5476	1752	7337	5502	2233	9800	7346	3152	9440	7073	3254	8900	6664	3459	8540	6392	3562
	19	27	5667	4263	1514	7638	5756	1769	7583	5736	2250	10160	7687	3178	10000	7414	3280	9260	7005	3459	8900	6733	3562
	22	30	6250	4219	1514	8440	5709	1769	8323	5689	2250	11150	7618	3203	10790	7346	3306	9800	7141	3562	9170	7005	3715
	24	32	6658	4219	1529	8995	5709	1785	8817	5689	2267	11870	7618	3203	11420	7346	3331	10160	7278	3638	9350	7210	3818
2.5+3.5+6.0	12	18	5142	3645	1568	6097	5056	1820	6165	5082	2281	8180	6801	3175	7910	6528	3278	7460	6188	3457	7190	5915	3559
	14	20	5142	3645	1568	6528	5056	1820	6597	5129	2298	8720	6801	3201	8450	6596	3303	7910	6188	3482	7640	5983	3610
	16	22	5142	3866	1583	6960	5056	1836	6967	5129	2316	9260	6801	3226	8990	6596	3354	8450	6188	3534	8180	5983	3636
	18	25	5492	4131	1598	7392	5476	1852	7337	5502	2333	9800	7346	3252	9440	7073	3354	8900	6664	3559	8540	6392	3662
	19	27	5667	4263	1614	7638	5756	1869	7583	5736	2350	10160	7687	3278	10000	7414	3380	9260	7005	3559	8900	6733	3662
	22	30	6250	4219	1614	8440	5709	1869	8323	5689	2350	11150	7618	3303	10790	7346	3406	9800	7141	3662	9170	7005	3815
	24	32	6658	4219	1629	8995	5709	1885	8817	5689	2367	11870	7618	3303	11420	7346	3431	10160	7278	3738	9350	7210	3918
2.5+4.2+4.2	12	18	5142	3645	1388	6097	5056	1640	6165	5082	2101	8180	6801	2995	7910	6528	3098	7460	6188	3277	7190	5915	3379
	14	20	5142	3645	1388	6528	5056	1640	6597	5129	2118	8720	6801	3021	8450	6596	3123	7910	6188	3302	7640	5983	3430
	16	22	5142	3866	1403	6960	5056	1656	6967	5129	2136	9260	6801	3046	8990	6596	3174	8450	6188	3354	8180	5983	3456
	18	25	5492	4131	1418	7392	5476	1672	7337	5502	2153	9800	7346	3072	9440	7073	3174	8900	6664	3379	8540	6392	3482
	19	27	5667	4263	1434	7638	5756	1689	7583	5736	2170	10160	7687	3098	10000	7414	3200	9260	7005	3379	8900	6733	3482
	22	30	6250	4219	1434	8440	5709	1689	8323	5689	2170	11150	7618	3123	10790	7346	3226	9800	7141	3482	9170	7005	3635
	24	32	6658	4219	1449	8995	5709	1705	8817	5689	2187	11870	7618	3123	11420	7346	3251	10160	7278	3558	9350	7210	3738
2.5+4.2+5.0	12	18	5142	3645	1688	6097	5056	1940	6165	5082	2401	8180	6801	3295	7910	6528	3098	7460	6188	3577	7190	5915	3679
	14	20	5142	3645	1688	6528	5056	1940	6597	5129	2418	8720	6801	3321	8450	6596	3423	7910	6188	3602	7640	5983	3730
	16	22	5142	3866	1703	6960	5056	1956	6967	5129	2436	9260	6801	3346	8990	6596	3474	8450	6188	3654	8180	5983	3756
	18	25	5492	4131	1718	7392	5476	1972	7337	5502	2453	9800	7346	3372	9440	7073	3474	8900	6664	3679	8540	6392	3782
	19	27	5667	4263	1734	7638	5756	1989	7583	5736	2470	10160	7687	3398	10000	7414	3500	9260	7005	3679	8900	6733	3782
	22	30	6250	4219	1734	8440	5709	1989	8323	5689	2470	11150	7618	3423	10790	7346	3526	9800	7141	3782	9170	7005	3935
	24	32	6658	4219	1749	8995	5709	2005	8817	5689	2487	11870	7618	3423	11420	7346	3551	10160	7278	3858	9350	7210	4038

	INDOOR		OUTDOOR TEMPERATURE (°CDB)																				
	EWB	EDB	-10			21			27			32			35			40			43		
	°C	°C	TC	SHC	PI	TC	SHC	PI	TC	SHC	PI	TC	SHC	PI	TC	SHC	PI	TC	SHC	PI	TC	SHC	PI
2.5+4.2+6.0	12	18	5142	3645	1688	6097	5056	1940	6165	5082	2401	8180	6801	3295	7910	6528	3398	7460	6188	3577	7190	5915	3679
	14	20	5142	3645	1688	6528	5056	1940	6597	5129	2418	8720	6801	3321	8450	6596	3423	7910	6188	3602	7640	5983	3730
	16	22	5142	3866	1703	6960	5056	1956	6967	5129	2436	9260	6801	3346	8990	6596	3474	8450	6188	3654	8180	5983	3756
	18	25	5492	4131	1718	7392	5476	1972	7337	5502	2453	9800	7346	3372	9440	7073	3474	8900	6664	3679	8540	6392	3782
	19	27	5667	4263	1734	7638	5756	1989	7583	5736	2470	10160	7687	3398	10000	7414	3500	9260	7005	3679	8900	6733	3782
	22	30	6250	4219	1734	8440	5709	1989	8323	5689	2470	11150	7618	3423	10790	7346	3526	9800	7141	3782	9170	7005	3935
	24	32	6658	4219	1749	8995	5709	2005	8817	5689	2487	11870	7618	3423	11420	7346	3551	10160	7278	3858	9350	7210	4038
2.5+5.0+5.0	12	18	5142	3645	1688	6097	5056	1940	6165	5082	2401	8180	6801	3295	7910	6528	3398	7460	6188	3577	7190	5915	3679
	14	20	5142	3645	1688	6528	5056	1940	6597	5129	2418	8720	6801	3321	8450	6596	3423	7910	6188	3602	7640	5983	3730
	16	22	5142	3866	1703	6960	5056	1956	6967	5129	2436	9260	6801	3346	8990	6596	3474	8450	6188	3654	8180	5983	3756
	18	25	5492	4131	1718	7392	5476	1972	7337	5502	2453	9800	7346	3372	9440	7073	3474	8900	6664	3679	8540	6392	3782
	19	27	5667	4263	1734	7638	5756	1989	7583	5736	2470	10160	7687	3398	10000	7414	3500	9260	7005	3679	8900	6733	3782
	22	30	6250	4219	1734	8440	5709	1989	8323	5689	2470	11150	7618	3423	10790	7346	3526	9800	7141	3782	9170	7005	3935
	24	32	6658	4219	1749	8995	5709	2005	8817	5689	2487	11870	7618	3423	11420	7346	3551	10160	7278	3858	9350	7210	4038
2.5+5.0+6.0	12	18	5142	3645	1688	6097	5056	1940	6165	5082	2401	8180	6801	3295	7910	6528	3398	7460	6188	3577	7190	5915	3679
	14	20	5142	3645	1688	6528	5056	1940	6597	5129	2418	8720	6801	3321	8450	6596	3423	7910	6188	3602	7640	5983	3730
	16	22	5142	3866	1703	6960	5056	1956	6967	5129	2436	9260	6801	3346	8990	6596	3474	8450	6188	3654	8180	5983	3756
	18	25	5492	4131	1718	7392	5476	1972	7337	5502	2453	9800	7346	3372	9440	7073	3474	8900	6664	3679	8540	6392	3782
	19	27	5667	4263	1734	7638	5756	1989	7583	5736	2470	10160	7687	3398	10000	7414	3500	9260	7005	3679	8900	6733	3782
	22	30	6250	4219	1734	8440	5709	1989	8323	5689	2470	11150	7618	3423	10790	7346	3526	9800	7141	3782	9170	7005	3935
	24	32	6658	4219	1749	8995	5709	2005	8817	5689	2487	11870	7618	3423	11420	7346	3551	10160	7278	3858	9350	7210	4038
2.5+6.0+6.0	12	18	5142	3645	1688	6097	5056	1940	6165	5082	2401	8180	6801	3295	7910	6528	3398	7460	6188	3577	7190	5915	3679
	14	20	5142	3645	1688	6528	5056	1940	6597	5129	2418	8720	6801	3321	8450	6596	3423	7910	6188	3602	7640	5983	3730
	16	22	5142	3866	1703	6960	5056	1956	6967	5129	2436	9260	6801	3346	8990	6596	3474	8450	6188	3654	8180	5983	3756
	18	25	5492	4131	1718	7392	5476	1972	7337	5502	2453	9800	7346	3372	9440	7073	3474	8900	6664	3679	8540	6392	3782
	19	27	5667	4263	1734	7638	5756	1989	7583	5736	2470	10160	7687	3398	10000	7414	3500	9260	7005	3679	8900	6733	3782
	22	30	6250	4219	1734	8440	5709	1989	8323	5689	2470	11150	7618	3423	10790	7346	3526	9800	7141	3782	9170	7005	3935
	24	32	6658	4219	1749	8995	5709	2005	8817	5689	2487	11870	7618	3423	11420	7346	3551	10160	7278	3858	9350	7210	4038
3.5+3.5+3.5	12	18	5142	3645	1288	6097	5056	1540	6165	5082	2001	8180	6801	2895	7910	6528	2698	7460	6188	3177	7190	5915	3279
	14	20	5142	3645	1288	6528	5056	1540	6597	5129	2018	8720	6801	2921	8450	6596	3023	7910	6188	3202	7640	5983	3330
	16	22	5142	3866	1303	6960	5056	1556	6967	5129	2036	9260	6801	2946	8990	6596	3074	8450	6188	3254	8180	5983	3356
	18	25	5492	4131	1318	7392	5476	1572	7337	5502	2053	9800	7346	2972	9440	7073	3074	8900	6664	3279	8540	6392	3382
	19	27	5667	4263	1334	7638	5756	1589	7583	5736	2070	10160	7687	2998	10000	7414	3100	9260	7005	3279	8900	6733	3382
	22	30	6250	4219	1334	8440	5709	1589	8323	5689	2070	11150	7618	3023	10790	7346	3126	9800	7141	3382	9170	7005	3535
	24	32	6658	4219	1349	8995	5709	1605	8817	5689	2087	11870	7618	3023	11420	7346	3151	10160	7278	3458	9350	7210	3638
3.5+3.5+4.2	12	18	5142	3645	1488	6097	5056	1740	6165	5082	2201	8180	6801	3095	7910	6528	2898	7460	6188	3377	7190	5915	3479
	14	20	5142	3645	1488	6528	5056	1740	6597	5129	2218	8720	6801	3121	8450	6596	3223	7910	6188	3402	7640	5983	3530
	16	22	5142	3866	1503	6960	5056	1756	6967	5129	2236	9260	6801	3146	8990	6596	3274	8450	6188	3454	8180	5983	3556
	18	25	5492	4131	1518	7392	5476	1772	7337	5502	2253	9800	7346	3172	9440	7073	3274	8900	6664	3479	8540	6392	3582
	19	27	5667	4263	1534	7638	5756	1789	7583	5736	2270	10160	7687	3198	10000	7414	3300	9260	7005	3479	8900	6733	3582
	22	30	6250	4219	1534	8440	5709	1789	8323	5689	2270	11150	7618	3223	10790	7346	3326	9800	7141	3582	9170	7005	3735
	24	32	6658	4219	1549	8995	5709	1805	8817	5689	2287	11870	7618	3223	11420	7346	3351	10160	7278	3658	9350	7210	3838

	INDOOR		OUTDOOR TEMPERATURE (°CDB)																				
	EWB	EDB	-10			21			27			32			35			40			43		
	°C	°C	TC	SHC	PI	TC	SHC	PI	TC	SHC	PI	TC	SHC	PI	TC	SHC	PI	TC	SHC	PI	TC	SHC	PI
3.5+3.5+5.0	12	18	5142	3645	1788	6097	5056	2040	6165	5082	2501	8180	6801	3395	7910	6528	3198	7460	6188	3677	7190	5915	3779
	14	20	5142	3645	1788	6528	5056	2040	6597	5129	2518	8720	6801	3421	8450	6596	3523	7910	6188	3702	7640	5983	3830
	16	22	5142	3866	1803	6960	5056	2056	6967	5129	2536	9260	6801	3446	8990	6596	3574	8450	6188	3754	8180	5983	3856
	18	25	5492	4131	1818	7392	5476	2072	7337	5502	2553	9800	7346	3472	9440	7073	3574	8900	6664	3779	8540	6392	3882
	19	27	5667	4263	1834	7638	5756	2089	7583	5736	2570	10160	7687	3498	10000	7414	3600	9260	7005	3779	8900	6733	3882
	22	30	6250	4219	1834	8440	5709	2089	8323	5689	2570	11150	7618	3523	10790	7346	3626	9800	7141	3882	9170	7005	4035
	24	32	6658	4219	1849	8995	5709	2105	8817	5689	2587	11870	7618	3523	11420	7346	3651	10160	7278	3958	9350	7210	4138
3.5+3.5+6.0	12	18	5142	3645	1888	6097	5056	2140	6165	5082	2601	8180	6801	3495	7910	6528	3298	7460	6188	3777	7190	5915	3879
	14	20	5142	3645	1888	6528	5056	2140	6597	5129	2618	8720	6801	3521	8450	6596	3623	7910	6188	3802	7640	5983	3930
	16	22	5142	3866	1903	6960	5056	2156	6967	5129	2636	9260	6801	3546	8990	6596	3674	8450	6188	3854	8180	5983	3956
	18	25	5492	4131	1918	7392	5476	2172	7337	5502	2653	9800	7346	3572	9440	7073	3674	8900	6664	3879	8540	6392	3982
	19	27	5667	4263	1934	7638	5756	2189	7583	5736	2670	10160	7687	3598	10000	7414	3700	9260	7005	3879	8900	6733	3982
	22	30	6250	4219	1934	8440	5709	2189	8323	5689	2670	11150	7618	3623	10790	7346	3726	9800	7141	3982	9170	7005	4135
	24	32	6658	4219	1949	8995	5709	2205	8817	5689	2687	11870	7618	3623	11420	7346	3751	10160	7278	4058	9350	7210	4238
3.5+4.2+4.2	12	18	5142	3645	1738	6097	5056	1990	6165	5082	2451	8180	6801	3345	7910	6528	3148	7460	6188	3627	7190	5915	3729
	14	20	5142	3645	1738	6528	5056	1990	6597	5129	2468	8720	6801	3371	8450	6596	3473	7910	6188	3652	7640	5983	3780
	16	22	5142	3866	1753	6960	5056	2006	6967	5129	2486	9260	6801	3396	8990	6596	3524	8450	6188	3704	8180	5983	3806
	18	25	5492	4131	1768	7392	5476	2022	7337	5502	2503	9800	7346	3422	9440	7073	3524	8900	6664	3729	8540	6392	3832
	19	27	5667	4263	1784	7638	5756	2039	7583	5736	2520	10160	7687	3448	10000	7414	3550	9260	7005	3729	8900	6733	3832
	22	30	6250	4219	1784	8440	5709	2039	8323	5689	2520	11150	7618	3473	10790	7346	3576	9800	7141	3832	9170	7005	3985
	24	32	6658	4219	1799	8995	5709	2055	8817	5689	2537	11870	7618	3473	11420	7346	3601	10160	7278	3908	9350	7210	4088
3.5+4.2+5.0	12	18	5142	3645	1988	6097	5056	2240	6165	5082	2701	8180	6801	3595	7910	6528	3398	7460	6188	3877	7190	5915	3979
	14	20	5142	3645	1988	6528	5056	2240	6597	5129	2718	8720	6801	3621	8450	6596	3723	7910	6188	3902	7640	5983	4030
	16	22	5142	3866	2003	6960	5056	2256	6967	5129	2736	9260	6801	3646	8990	6596	3774	8450	6188	3954	8180	5983	4056
	18	25	5492	4131	2018	7392	5476	2272	7337	5502	2753	9800	7346	3672	9440	7073	3774	8900	6664	3979	8540	6392	4082
	19	27	5667	4263	2034	7638	5756	2289	7583	5736	2770	10160	7687	3698	10000	7414	3800	9260	7005	3979	8900	6733	4082
	22	30	6250	4219	2034	8440	5709	2289	8323	5689	2770	11150	7618	3723	10790	7346	3826	9800	7141	4082	9170	7005	4235
	24	32	6658	4219	2049	8995	5709	2305	8817	5689	2787	11870	7618	3723	11420	7346	3851	10160	7278	4158	9350	7210	4338
3.5+4.2+6.0	12	18	5142	3645	2088	6097	5056	2340	6165	5082	2801	8180	6801	3695	7910	6528	3498	7460	6188	3977	7190	5915	4079
	14	20	5142	3645	2088	6528	5056	2340	6597	5129	2818	8720	6801	3721	8450	6596	3823	7910	6188	4002	7640	5983	4130
	16	22	5142	3866	2103	6960	5056	2356	6967	5129	2836	9260	6801	3746	8990	6596	3874	8450	6188	4054	8180	5983	4156
	18	25	5492	4131	2118	7392	5476	2372	7337	5502	2853	9800	7346	3772	9440	7073	3874	8900	6664	4079	8540	6392	4182
	19	27	5667	4263	2134	7638	5756	2389	7583	5736	2870	10160	7687	3798	10000	7414	3900	9260	7005	4079	8900	6733	4182
	22	30	6250	4219	2134	8440	5709	2389	8323	5689	2870	11150	7618	3823	10790	7346	3926	9800	7141	4182	9170	7005	4335
	24	32	6658	4219	2149	8995	5709	2405	8817	5689	2887	11870	7618	3823	11420	7346	3951	10160	7278	4258	9350	7210	4438
3.5+5.0+5.0	12	18	5142	3645	2088	6097	5056	2340	6165	5082	2801	8180	6801	3695	7910	6528	3498	7460	6188	3977	7190	5915	4079
	14	20	5142	3645	2088	6528	5056	2340	6597	5129	2818	8720	6801	3721	8450	6596	3823	7910	6188	4002	7640	5983	4130
	16	22	5142	3866	2103	6960	5056	2356	6967	5129	2836	9260	6801	3746	8990	6596	3874	8450	6188	4054	8180	5983	4156
	18	25	5492	4131	2118	7392	5476	2372	7337	5502	2853	9800	7346	3772	9440	7073	3874	8900	6664	4079	8540	6392	4182
	19	27	5667	4263	2134	7638	5756	2389	7583	5736	2870	10160	7687	3798	10000	7414	3900	9260	7005	4079	8900	6733	4182
	22	30	6250	4219	2134	8440	5709	2389	8323	5689	2870	11150	7618	3823	10790	7346	3926	9800	7141	4182	9170	7005	4335
	24	32	6658	4219	2149	8995	5709	2405	8817	5689	2887	11870	7618	3823	11420	7346	3951	10160	7278	4258	9350	7210	4438

	INDOOR		OUTDOOR TEMPERATURE (°CDB)																				
	EWB	EDB	-10			21			27			32			35			40			43		
	°C	°C	TC	SHC	PI	TC	SHC	PI	TC	SHC	PI	TC	SHC	PI	TC	SHC	PI	TC	SHC	PI	TC	SHC	PI
3.5+5.0+6.0	12	18	5142	3645	2288	6097	5056	2540	6165	5082	3001	8180	6801	3895	7910	6528	3698	7460	6188	4177	7190	5915	4279
	14	20	5142	3645	2288	6528	5056	2540	6597	5129	3018	8720	6801	3921	8450	6596	4023	7910	6188	4202	7640	5983	4330
	16	22	5142	3866	2303	6960	5056	2556	6967	5129	3036	9260	6801	3946	8990	6596	4074	8450	6188	4254	8180	5983	4356
	18	25	5492	4131	2318	7392	5476	2572	7337	5502	3053	9800	7346	3972	9440	7073	4074	8900	6664	4279	8540	6392	4382
	19	27	5667	4263	2334	7638	5756	2589	7583	5736	3070	10160	7687	3998	10000	7414	4100	9260	7005	4279	8900	6733	4382
	22	30	6250	4219	2334	8440	5709	2589	8323	5689	3070	11150	7618	4023	10790	7346	4126	9800	7141	4382	9170	7005	4535
	24	32	6658	4219	2349	8995	5709	2605	8817	5689	3087	11870	7618	4023	11420	7346	4151	10160	7278	4458	9350	7210	4638
3.5+6.0+6.0	12	18	5142	3645	2288	6097	5056	2540	6165	5082	3001	8180	6801	3895	7910	6528	3698	7460	6188	4177	7190	5915	4279
	14	20	5142	3645	2288	6528	5056	2540	6597	5129	3018	8720	6801	3921	8450	6596	4023	7910	6188	4202	7640	5983	4330
	16	22	5142	3866	2303	6960	5056	2556	6967	5129	3036	9260	6801	3946	8990	6596	4074	8450	6188	4254	8180	5983	4356
	18	25	5492	4131	2318	7392	5476	2572	7337	5502	3053	9800	7346	3972	9440	7073	4074	8900	6664	4279	8540	6392	4382
	19	27	5667	4263	2334	7638	5756	2589	7583	5736	3070	10160	7687	3998	10000	7414	4100	9260	7005	4279	8900	6733	4382
	22	30	6250	4219	2334	8440	5709	2589	8323	5689	3070	11150	7618	4023	10790	7346	4126	9800	7141	4382	9170	7005	4535
	24	32	6658	4219	2349	8995	5709	2605	8817	5689	3087	11870	7618	4023	11420	7346	4151	10160	7278	4458	9350	7210	4638
4.2+4.2+4.2	12	18	5142	3645	1938	6097	5056	2190	6165	5082	2651	8180	6801	3545	7910	6528	3348	7460	6188	3827	7190	5915	3929
	14	20	5142	3645	1938	6528	5056	2190	6597	5129	2668	8720	6801	3571	8450	6596	3673	7910	6188	3852	7640	5983	3980
	16	22	5142	3866	1953	6960	5056	2206	6967	5129	2686	9260	6801	3596	8990	6596	3724	8450	6188	3904	8180	5983	4006
	18	25	5492	4131	1968	7392	5476	2222	7337	5502	2703	9800	7346	3622	9440	7073	3724	8900	6664	3929	8540	6392	4032
	19	27	5667	4263	1984	7638	5756	2239	7583	5736	2720	10160	7687	3648	10000	7414	3750	9260	7005	3929	8900	6733	4032
	22	30	6250	4219	1984	8440	5709	2239	8323	5689	2720	11150	7618	3673	10790	7346	3776	9800	7141	4032	9170	7005	4185
	24	32	6658	4219	1999	8995	5709	2255	8817	5689	2737	11870	7618	3673	11420	7346	3801	10160	7278	4108	9350	7210	4288
4.2+4.2+5.0	12	18	5142	3645	2188	6097	5056	2440	6165	5082	2901	8180	6801	3795	7910	6528	3598	7460	6188	4077	7190	5915	4179
	14	20	5142	3645	2188	6528	5056	2440	6597	5129	2918	8720	6801	3821	8450	6596	3923	7910	6188	4102	7640	5983	4230
	16	22	5142	3866	2203	6960	5056	2456	6967	5129	2936	9260	6801	3846	8990	6596	3974	8450	6188	4154	8180	5983	4256
	18	25	5492	4131	2218	7392	5476	2472	7337	5502	2953	9800	7346	3872	9440	7073	3974	8900	6664	4179	8540	6392	4282
	19	27	5667	4263	2234	7638	5756	2489	7583	5736	2970	10160	7687	3898	10000	7414	4000	9260	7005	4179	8900	6733	4282
	22	30	6250	4219	2234	8440	5709	2489	8323	5689	2970	11150	7618	3923	10790	7346	4026	9800	7141	4282	9170	7005	4435
	24	32	6658	4219	2249	8995	5709	2505	8817	5689	2987	11870	7618	3923	11420	7346	4051	10160	7278	4358	9350	7210	4538
4.2+4.2+6.0	12	18	5142	3645	2288	6097	5056	2540	6165	5082	3001	8180	6801	3895	7910	6528	3698	7460	6188	4177	7190	5915	4279
	14	20	5142	3645	2288	6528	5056	2540	6597	5129	3018	8720	6801	3921	8450	6596	4023	7910	6188	4202	7640	5983	4330
	16	22	5142	3866	2303	6960	5056	2556	6967	5129	3036	9260	6801	3946	8990	6596	4074	8450	6188	4254	8180	5983	4356
	18	25	5492	4131	2318	7392	5476	2572	7337	5502	3053	9800	7346	3972	9440	7073	4074	8900	6664	4279	8540	6392	4382
	19	27	5667	4263	2334	7638	5756	2589	7583	5736	3070	10160	7687	3998	10000	7414	4100	9260	7005	4279	8900	6733	4382
	22	30	6250	4219	2334	8440	5709	2589	8323	5689	3070	11150	7618	4023	10790	7346	4126	9800	7141	4382	9170	7005	4535
	24	32	6658	4219	2349	8995	5709	2605	8817	5689	3087	11870	7618	4023	11420	7346	4151	10160	7278	4458	9350	7210	4638
4.2+5.0+5.0	12	18	5142	3645	2288	6097	5056	2540	6165	5082	3001	8180	6801	3895	7910	6528	3698	7460	6188	4177	7190	5915	4279
	14	20	5142	3645	2288	6528	5056	2540	6597	5129	3018	8720	6801	3921	8450	6596	4023	7910	6188	4202	7640	5983	4330
	16	22	5142	3866	2303	6960	5056	2556	6967	5129	3036	9260	6801	3946	8990	6596	4074	8450	6188	4254	8180	5983	4356
	18	25	5492	4131	2318	7392	5476	2572	7337	5502	3053	9800	7346	3972	9440	7073	4074	8900	6664	4279	8540	6392	4382
	19	27	5667	4263	2334	7638	5756	2589	7583	5736	3070	10160	7687	3998	10000	7414	4100	9260	7005	4279	8900	6733	4382
	22	30	6250	4219	2334	8440	5709	2589	8323	5689	3070	11150	7618	4023	10790	7346	4126	9800	7141	4382	9170	7005	4535
	24	32	6658	4219	2349	8995	5709	2605	8817	5689	3087	11870	7618	4023	11420	7346	4151	10160	7278	4458	9350	7210	4638

	INDOOR		OUTDOOR TEMPERATURE (°CDB)																				
	EWB	EDB	-10			21			27			32			35			40			43		
	°C	°C	TC	SHC	PI	TC	SHC	PI	TC	SHC	PI	TC	SHC	PI	TC	SHC	PI	TC	SHC	PI	TC	SHC	PI
3.5+5.0+6.0	12	18	5142	3645	2288	6097	5056	2540	6165	5082	3001	8180	6801	3895	7910	6528	3698	7460	6188	4177	7190	5915	4279
	14	20	5142	3645	2288	6528	5056	2540	6597	5129	3018	8720	6801	3921	8450	6596	4023	7910	6188	4202	7640	5983	4330
	16	22	5142	3866	2303	6960	5056	2556	6967	5129	3036	9260	6801	3946	8990	6596	4074	8450	6188	4254	8180	5983	4356
	18	25	5492	4131	2318	7392	5476	2572	7337	5502	3053	9800	7346	3972	9440	7073	4074	8900	6664	4279	8540	6392	4382
	19	27	5667	4263	2334	7638	5756	2589	7583	5736	3070	10160	7687	3998	10000	7414	4100	9260	7005	4279	8900	6733	4382
	22	30	6250	4219	2334	8440	5709	2589	8323	5689	3070	11150	7618	4023	10790	7346	4126	9800	7141	4382	9170	7005	4535
	24	32	6658	4219	2349	8995	5709	2605	8817	5689	3087	11870	7618	4023	11420	7346	4151	10160	7278	4458	9350	7210	4638
3.5+6.0+6.0	12	18	5142	3645	2288	6097	5056	2540	6165	5082	3001	8180	6801	3895	7910	6528	3698	7460	6188	4177	7190	5915	4279
	14	20	5142	3645	2288	6528	5056	2540	6597	5129	3018	8720	6801	3921	8450	6596	4023	7910	6188	4202	7640	5983	4330
	16	22	5142	3866	2303	6960	5056	2556	6967	5129	3036	9260	6801	3946	8990	6596	4074	8450	6188	4254	8180	5983	4356
	18	25	5492	4131	2318	7392	5476	2572	7337	5502	3053	9800	7346	3972	9440	7073	4074	8900	6664	4279	8540	6392	4382
	19	27	5667	4263	2334	7638	5756	2589	7583	5736	3070	10160	7687	3998	10000	7414	4100	9260	7005	4279	8900	6733	4382
	22	30	6250	4219	2334	8440	5709	2589	8323	5689	3070	11150	7618	4023	10790	7346	4126	9800	7141	4382	9170	7005	4535
	24	32	6658	4219	2349	8995	5709	2605	8817	5689	3087	11870	7618	4023	11420	7346	4151	10160	7278	4458	9350	7210	4638
4.2+4.2+4.2	12	18	5142	3645	1938	6097	5056	2190	6165	5082	2651	8180	6801	3545	7910	6528	3348	7460	6188	3827	7190	5915	3929
	14	20	5142	3645	1938	6528	5056	2190	6597	5129	2668	8720	6801	3571	8450	6596	3673	7910	6188	3852	7640	5983	3980
	16	22	5142	3866	1953	6960	5056	2206	6967	5129	2686	9260	6801	3596	8990	6596	3724	8450	6188	3904	8180	5983	4006
	18	25	5492	4131	1968	7392	5476	2222	7337	5502	2703	9800	7346	3622	9440	7073	3724	8900	6664	3929	8540	6392	4032
	19	27	5667	4263	1984	7638	5756	2239	7583	5736	2720	10160	7687	3648	10000	7414	3750	9260	7005	3929	8900	6733	4032
	22	30	6250	4219	1984	8440	5709	2239	8323	5689	2720	11150	7618	3673	10790	7346	3776	9800	7141	4032	9170	7005	4185
	24	32	6658	4219	1999	8995	5709	2255	8817	5689	2737	11870	7618	3673	11420	7346	3801	10160	7278	4108	9350	7210	4288
4.2+4.2+5.0	12	18	5142	3645	2188	6097	5056	2440	6165	5082	2901	8180	6801	3795	7910	6528	3598	7460	6188	4077	7190	5915	4179
	14	20	5142	3645	2188	6528	5056	2440	6597	5129	2918	8720	6801	3821	8450	6596	3923	7910	6188	4102	7640	5983	4230
	16	22	5142	3866	2203	6960	5056	2456	6967	5129	2936	9260	6801	3846	8990	6596	3974	8450	6188	4154	8180	5983	4256
	18	25	5492	4131	2218	7392	5476	2472	7337	5502	2953	9800	7346	3872	9440	7073	3974	8900	6664	4179	8540	6392	4282
	19	27	5667	4263	2234	7638	5756	2489	7583	5736	2970	10160	7687	3898	10000	7414	4000	9260	7005	4179	8900	6733	4282
	22	30	6250	4219	2234	8440	5709	2489	8323	5689	2970	11150	7618	3923	10790	7346	4026	9800	7141	4282	9170	7005	4435
	24	32	6658	4219	2249	8995	5709	2505	8817	5689	2987	11870	7618	3923	11420	7346	4051	10160	7278	4358	9350	7210	4538
4.2+4.2+6.0	12	18	5142	3645	2288	6097	5056	2540	6165	5082	3001	8180	6801	3895	7910	6528	3698	7460	6188	4177	7190	5915	4279
	14	20	5142	3645	2288	6528	5056	2540	6597	5129	3018	8720	6801	3921	8450	6596	4023	7910	6188	4202	7640	5983	4330
	16	22	5142	3866	2303	6960	5056	2556	6967	5129	3036	9260	6801	3946	8990	6596	4074	8450	6188	4254	8180	5983	4356
	18	25	5492	4131	2318	7392	5476	2572	7337	5502	3053	9800	7346	3972	9440	7073	4074	8900	6664	4279	8540	6392	4382
	19	27	5667	4263	2334	7638	5756	2589	7583	5736	3070	10160	7687	3998	10000	7414	4100	9260	7005	4279	8900	6733	4382
	22	30	6250	4219	2334	8440	5709	2589	8323	5689	3070	11150	7618	4023	10790	7346	4126	9800	7141	4382	9170	7005	4535
	24	32	6658	4219	2349	8995	5709	2605	8817	5689	3087	11870	7618	4023	11420	7346	4151	10160	7278	4458	9350	7210	4638
4.2+5.0+5.0	12	18	5142	3645	2288	6097	5056	2540	6165	5082	3001	8180	6801	3895	7910	6528	3698	7460	6188	4177	7190	5915	4279
	14	20	5142	3645	2288	6528	5056	2540	6597	5129	3018	8720	6801	3921	8450	6596	4023	7910	6188	4202	7640	5983	4330
	16	22	5142	3866	2303	6960	5056	2556	6967	5129	3036	9260	6801	3946	8990	6596	4074	8450	6188	4254	8180	5983	4356
	18	25	5492	4131	2318	7392	5476	2572	7337	5502	3053	9800	7346	3972	9440	7073	4074	8900	6664	4279	8540	6392	4382
	19	27	5667	4263	2334	7638	5756	2589	7583	5736	3070	10160	7687	3998	10000	7414	4100	9260	7005	4279	8900	6733	4382
	22	30	6250	4219	2334	8440	5709	2589	8323	5689	3070	11150	7618	4023	10790	7346	4126	9800	7141	4382	9170	7005	4535
	24	32	6658	4219	2349	8995	5709	2605	8817	5689	3087	11870	7618	4023	11420	7346	4151	10160	7278	4458	9350	7210	4638

	INDOOR		OUTDOOR TEMPERATURE (°CDB)																				
	EWB	EDB	-10			21			27			32			35			40			43		
	°C	°C	TC	SHC	PI	TC	SHC	PI	TC	SHC	PI	TC	SHC	PI	TC	SHC	PI	TC	SHC	PI	TC	SHC	PI
4.2+5.0+6.0	12	18	5142	3645	2288	6097	5056	2540	6165	5082	3001	8180	6801	3895	7910	6528	3698	7460	6188	4177	7190	5915	4279
	14	20	5142	3645	2288	6528	5056	2540	6597	5129	3018	8720	6801	3921	8450	6596	4023	7910	6188	4202	7640	5983	4330
	16	22	5142	3866	2303	6960	5056	2556	6967	5129	3036	9260	6801	3946	8990	6596	4074	8450	6188	4254	8180	5983	4356
	18	25	5492	4131	2318	7392	5476	2572	7337	5502	3053	9800	7346	3972	9440	7073	4074	8900	6664	4279	8540	6392	4382
	19	27	5667	4263	2334	7638	5756	2589	7583	5736	3070	10160	7687	3998	10000	7414	4100	9260	7005	4279	8900	6733	4382
	22	30	6250	4219	2334	8440	5709	2589	8323	5689	3070	11150	7618	4023	10790	7346	4126	9800	7141	4382	9170	7005	4535
	24	32	6658	4219	2349	8995	5709	2605	8817	5689	3087	11870	7618	4023	11420	7346	4151	10160	7278	4458	9350	7210	4638
5.0+5.0+5.0	12	18	5142	3645	2288	6097	5056	2540	6165	5082	3001	8180	6801	3895	7910	6528	3698	7460	6188	4177	7190	5915	4279
	14	20	5142	3645	2288	6528	5056	2540	6597	5129	3018	8720	6801	3921	8450	6596	4023	7910	6188	4202	7640	5983	4330
	16	22	5142	3866	2303	6960	5056	2556	6967	5129	3036	9260	6801	3946	8990	6596	4074	8450	6188	4254	8180	5983	4356
	18	25	5492	4131	2318	7392	5476	2572	7337	5502	3053	9800	7346	3972	9440	7073	4074	8900	6664	4279	8540	6392	4382
	19	27	5667	4263	2334	7638	5756	2589	7583	5736	3070	10160	7687	3998	10000	7414	4100	9260	7005	4279	8900	6733	4382
	22	30	6250	4219	2334	8440	5709	2589	8323	5689	3070	11150	7618	4023	10790	7346	4126	9800	7141	4382	9170	7005	4535
	24	32	6658	4219	2349	8995	5709	2605	8817	5689	3087	11870	7618	4023	11420	7346	4151	10160	7278	4458	9350	7210	4638
5.0+5.0+6.0	12	18	5142	3645	2288	6097	5056	2540	6165	5082	3001	8180	6801	3895	7910	6528	3698	7460	6188	4177	7190	5915	4279
	14	20	5142	3645	2288	6528	5056	2540	6597	5129	3018	8720	6801	3921	8450	6596	4023	7910	6188	4202	7640	5983	4330
	16	22	5142	3866	2303	6960	5056	2556	6967	5129	3036	9260	6801	3946	8990	6596	4074	8450	6188	4254	8180	5983	4356
	18	25	5492	4131	2318	7392	5476	2572	7337	5502	3053	9800	7346	3972	9440	7073	4074	8900	6664	4279	8540	6392	4382
	19	27	5667	4263	2334	7638	5756	2589	7583	5736	3070	10160	7687	3998	10000	7414	4100	9260	7005	4279	8900	6733	4382
	22	30	6250	4219	2334	8440	5709	2589	8323	5689	3070	11150	7618	4023	10790	7346	4126	9800	7141	4382	9170	7005	4535
	24	32	6658	4219	2349	8995	5709	2605	8817	5689	3087	11870	7618	4023	11420	7346	4151	10160	7278	4458	9350	7210	4638
1.5+1.5+1.5+1.5	12	18	3228	2297	710	3864	3237	865	3577	2988	1002	4920	4134	1554	4740	3952	1617	4440	3725	1727	4260	3543	1791
	14	20	3228	2297	710	4152	3237	865	3864	3019	1012	5280	4134	1569	5100	3998	1633	4740	3725	1743	4560	3589	1822
	16	22	3228	2444	719	4440	3237	875	4111	3019	1023	5640	4134	1585	5460	3998	1664	5100	3725	1775	4920	3589	1838
	18	25	3461	2620	729	4728	3517	885	4358	3268	1034	6000	4497	1601	5760	4316	1664	5400	4043	1791	5160	3861	1854
	19	27	3578	2709	738	4892	3704	895	4522	3424	1044	6240	4724	1617	6000	4543	1680	5640	4270	1791	5400	4088	1854
	22	30	3967	2679	738	5427	3673	895	5016	3393	1044	6900	4679	1633	6660	4497	1696	6000	4361	1854	5580	4270	1949
	24	32	4239	2679	748	5797	3673	905	5344	3393	1055	7380	4679	1633	7080	4497	1712	6240	4452	1901	5700	4406	2012
1.5+1.5+1.5+1.8	12	18	3389	2411	810	4058	3399	965	3756	3137	1102	5166	4341	1654	4977	4150	1717	4662	3911	1827	4473	3720	1891
	14	20	3389	2411	810	4360	3399	965	4058	3170	1112	5544	4341	1669	5355	4197	1733	4977	3911	1843	4788	3768	1922
	16	22	3389	2566	819	4662	3399	975	4317	3170	1123	5922	4341	1685	5733	4197	1764	5355	3911	1875	5166	3768	1938
	18	25	3634	2751	829	4964	3693	985	4576	3432	1134	6300	4722	1701	6048	4531	1764	5670	4245	1891	5418	4054	1954
	19	27	3757	2844	838	5137	3889	995	4748	3595	1144	6552	4961	1717	6300	4770	1780	5922	4484	1891	5670	4293	1954
	22	30	4165	2813	838	5698	3856	995	5266	3562	1144	7245	4913	1733	6993	4722	1796	6300	4579	1954	5859	4484	2049
	24	32	4451	2813	848	6087	3856	1005	5612	3562	1155	7749	4913	1733	7434	4722	1812	6552	4674	2001	5985	4627	2112
1.5+1.5+1.5+2.5	12	18	3766	2679	687	4509	3777	862	4173	3486	1016	5740	4823	1638	5530	4611	1709	5180	4346	1833	4970	4134	1905
	14	20	3766	2679	687	4844	3777	862	4509	3522	1028	6160	4823	1655	5950	4664	1727	5530	4346	1851	5320	4187	1940
	16	22	3766	2851	697	5180	3777	873	4796	3522	1040	6580	4823	1673	6370	4664	1762	5950	4346	1887	5740	4187	1958
	18	25	4038	3057	708	5516	4103	885	5084	3813	1052	7000	5247	1691	6720	5035	1762	6300	4717	1905	6020	4505	1976
	19	27	4174	3160	719	5708	4321	896	5276	3994	1064	7280	5512	1709	7000	5300	1780	6580	4982	1905	6300	4770	1976
	22	30	4628	3126	719	6331	4285	896	5851	3958	1064	8050	5459	1727	7770	5247	1798	7000	5088	1976	6510	4982	2083
	24	32	4945	3126	730	6763	4285	907	6235	3958	1076	8610	5459	1727	8260	5247	1816	7280	5194	2029	6650	5141	2154
1.5+1.5+1.5+3.5	12	18	4304	3062	964	5153	4316	1211	4769	3984	1427	6560	5512	2300	6320	5270	2400	5920	4967	2575	5680	4724	2675
	14	20	4304	3062	964	5536	4316	1211	5153	4026	1444	7040	5512	2325	6800	5330	2425	6320	4967	2600	6080	4785	2725
	16	22	4304	3258	980	5920	4316	1227	5481	4026	1460	7520	5512	2350	7280	5330	2475	6800	4967	2650	6560	4785	2750
	18	25	4615	3494	995	6304	4690	1243	5810	4358	1477	8000	5996	2375	7680	5754	2475	7200	5391	2675	6880	5148	2775
	19	27	4770	3612	1010	6523	4939	1259	6030	4565	1494	8320	6299	2400	8000	6057	2500	7520	5694	2675	7200	5451	2775
	22	30	5289	3572	1010	7236	4897	1259	6687	4524	1494	9200	6239	2425	8880	5996	2525	8000	5815	2775	7440	5694	2925
	24	32	5652	3572	1025	7729	4897	1274	7126	4524	1511	9840	6239	2425	9440	5996	2550	8320	5936	2850	7600	5875	3025

	INDOOR		OUTDOOR TEMPERATURE (°CDB)																				
	EWB	EDB	-10			21			27			32			35			40			43		
	°C	°C	TC	SHC	PI	TC	SHC	PI	TC	SHC	PI	TC	SHC	PI	TC	SHC	PI	TC	SHC	PI	TC	SHC	PI
1.5+1.5+1.5+4.2	12	18	4773	3453	1003	5675	4786	1259	5267	4433	1484	7170	6056	2392	6915	5799	2496	6490	5477	2678	6235	5220	2782
	14	20	4773	3453	1003	6082	4786	1259	5675	4477	1501	7680	6056	2418	7425	5863	2522	6915	5477	2704	6660	5284	2834
	16	22	4773	3662	1019	6490	4786	1276	6024	4477	1519	8190	6056	2444	7935	5863	2574	7425	5477	2756	7170	5284	2860
	18	25	5103	3912	1034	6898	5183	1292	6374	4830	1536	8700	6571	2470	8360	6314	2574	7850	5928	2782	7510	5670	2886
	19	27	5269	4037	1050	7131	5447	1309	6606	5050	1554	9040	6893	2496	8700	6635	2600	8190	6249	2782	7850	5992	2886
	22	30	5819	3996	1050	7888	5403	1309	7305	5006	1554	9975	6829	2522	9635	6571	2626	8700	6378	2886	8105	6249	3042
	24	32	6205	3996	1066	8412	5403	1325	7771	5006	1571	10655	6829	2522	10230	6571	2652	9040	6507	2964	8275	6442	3146
1.5+1.5+1.5+5.0	12	18	5273	3753	1022	6475	5386	1283	6067	5033	1513	7970	6656	2438	7715	6399	2544	7290	6077	2730	7035	5820	2836
	14	20	5273	3753	1022	6882	5386	1283	6475	5077	1530	8480	6656	2465	8225	6463	2571	7715	6077	2756	7460	5884	2889
	16	22	5273	3962	1038	7290	5386	1300	6824	5077	1548	8990	6656	2491	8735	6463	2624	8225	6077	2809	7970	5884	2915
	18	25	5603	4212	1054	7698	5783	1317	7174	5430	1566	9500	7171	2518	9160	6914	2624	8650	6528	2836	8310	6270	2942
	19	27	5769	4337	1070	7931	6047	1334	7406	5650	1584	9840	7493	2544	9500	7235	2650	8990	6849	2836	8650	6592	2942
	22	30	6319	4296	1070	8688	6003	1334	8105	5606	1584	10775	7429	2571	10435	7171	2677	9500	6978	2942	8905	6849	3101
	24	32	6705	4296	1086	9212	6003	1351	8571	5606	1601	11455	7429	2571	11030	7171	2703	9840	7107	3021	9075	7042	3207
1.5+1.5+1.5+6.0	12	18	5773	4253	1022	6975	5886	1283	6567	5533	1513	8470	7156	2438	8215	6899	2544	7790	6577	2730	7535	6320	2836
	14	20	5773	4253	1022	7382	5886	1283	6975	5577	1530	8980	7156	2465	8725	6963	2571	8215	6577	2756	7960	6384	2889
	16	22	5773	4462	1038	7790	5886	1300	7324	5577	1548	9490	7156	2491	9235	6963	2624	8725	6577	2809	8470	6384	2915
	18	25	6103	4712	1054	8198	6283	1317	7674	5930	1566	10000	7671	2518	9660	7414	2624	9150	7028	2836	8810	6770	2942
	19	27	6269	4837	1070	8431	6547	1334	7906	6150	1584	10340	7993	2544	10000	7735	2650	9490	7349	2836	9150	7092	2942
	22	30	6819	4796	1070	9188	6503	1334	8605	6106	1584	11275	7929	2571	10935	7671	2677	10000	7478	2942	9405	7349	3101
	24	32	7205	4796	1086	9712	6503	1351	9071	6106	1601	11955	7929	2571	11530	7671	2703	10340	7607	3021	9575	7542	3207
1.5+1.5+1.8+1.8	12	18	3551	2526	775	4251	3561	948	3934	3287	1099	5412	4547	1710	5214	4347	1780	4884	4098	1903	4686	3898	1973
	14	20	3551	2526	775	4567	3561	948	4251	3321	1111	5808	4547	1728	5610	4397	1798	5214	4098	1920	5016	3948	2008
	16	22	3551	2688	786	4884	3561	959	4522	3321	1122	6204	4547	1745	6006	4397	1833	5610	4098	1955	5412	3948	2025
	18	25	3807	2883	796	5201	3869	970	4794	3595	1134	6600	4947	1763	6336	4747	1833	5940	4447	1973	5676	4247	2043
	19	27	3936	2980	807	5381	4074	981	4974	3766	1146	6864	5197	1780	6600	4997	1850	6204	4697	1973	5940	4497	2043
	22	30	4363	2947	807	5969	4040	981	5517	3732	1146	7590	5147	1798	7326	4947	1868	6600	4797	2043	6138	4697	2148
	24	32	4663	2947	817	6376	4040	992	5879	3732	1158	8118	5147	1798	7788	4947	1885	6864	4897	2095	6270	4847	2218
1.5+1.5+1.8+2.5	12	18	3927	2794	1084	4702	3938	1266	4352	3635	1426	5986	5030	2072	5767	4808	2146	5402	4532	2276	5183	4311	2350
	14	20	3927	2794	1084	5052	3938	1266	4702	3673	1438	6424	5030	2091	6205	4864	2165	5767	4532	2294	5548	4366	2387
	16	22	3927	2973	1095	5402	3938	1278	5002	3673	1451	6862	5030	2109	6643	4864	2202	6205	4532	2331	5986	4366	2405
	18	25	4211	3188	1106	5752	4279	1290	5302	3976	1463	7300	5472	2128	7008	5251	2202	6570	4919	2350	6278	4698	2424
	19	27	4353	3296	1117	5952	4507	1301	5502	4166	1476	7592	5748	2146	7300	5527	2220	6862	5195	2350	6570	4974	2424
	22	30	4826	3260	1117	6602	4469	1301	6102	4128	1476	8395	5693	2165	8103	5472	2239	7300	5306	2424	6789	5195	2535
	24	32	5157	3260	1128	7053	4469	1313	6502	4128	1488	8979	5693	2165	8614	5472	2257	7592	5416	2479	6935	5361	2609
1.5+1.5+1.8+3.5	12	18	4465	3177	1011	5346	4478	1226	4948	4134	1414	6806	5718	2176	6557	5467	2263	6142	5153	2415	5893	4902	2503
	14	20	4465	3177	1011	5744	4478	1226	5346	4177	1429	7304	5718	2197	7055	5530	2285	6557	5153	2437	6308	4964	2546
	16	22	4465	3381	1024	6142	4478	1240	5687	4177	1444	7802	5718	2219	7553	5530	2328	7055	5153	2481	6806	4964	2568
	18	25	4788	3625	1037	6540	4865	1254	6028	4521	1458	8300	6221	2241	7968	5970	2328	7470	5593	2503	7138	5341	2590
	19	27	4949	3747	1050	6768	5124	1267	6256	4736	1473	8632	6535	2263	8300	6284	2350	7802	5907	2503	7470	5656	2590
	22	30	5487	3706	1050	7507	5081	1267	6938	4693	1473	9545	6473	2285	9213	6221	2372	8300	6033	2590	7719	5907	2721
	24	32	5864	3706	1064	8019	5081	1281	7393	4693	1487	10209	6473	2285	9794	6221	2394	8632	6158	2655	7885	6096	2808

	INDOOR		OUTDOOR TEMPERATURE (°CDB)																				
	EWB	EDB	-10			21			27			32			35			40			43		
	°C	°C	TC	SHC	PI	TC	SHC	PI	TC	SHC	PI	TC	SHC	PI	TC	SHC	PI	TC	SHC	PI	TC	SHC	PI
1.5+1.5+1.8+4.2	12	18	5073	3753	907	5975	5086	1138	5567	4733	1341	7470	6356	2162	7215	6099	2256	6790	5777	2421	6535	5520	2515
	14	20	5073	3753	907	6382	5086	1138	5975	4777	1357	7980	6356	2186	7725	6163	2280	7215	5777	2444	6960	5584	2562
	16	22	5073	3962	921	6790	5086	1153	6324	4777	1373	8490	6356	2209	8235	6163	2327	7725	5777	2491	7470	5584	2585
	18	25	5403	4212	935	7198	5483	1168	6674	5130	1389	9000	6871	2233	8660	6614	2327	8150	6228	2515	7810	5970	2609
	19	27	5569	4337	949	7431	5747	1183	6906	5350	1404	9340	7193	2256	9000	6935	2350	8490	6549	2515	8150	6292	2609
	22	30	6119	4296	949	8188	5703	1183	7605	5306	1404	10275	7129	2280	9935	6871	2374	9000	6678	2609	8405	6549	2750
	24	32	6505	4296	963	8712	5703	1198	8071	5306	1420	10955	7129	2280	10530	6871	2397	9340	6807	2679	8575	6742	2844
1.5+1.5+1.8+5.0	12	18	5873	4553	1203	6775	5686	1459	6367	5533	1684	8270	7156	2592	8015	6899	2696	7590	6377	2878	7335	6320	2982
	14	20	5873	4553	1203	7182	5686	1459	6775	5577	1701	8780	7156	2618	8525	6963	2722	8015	6377	2904	7760	6384	3034
	16	22	5873	4762	1219	7590	5686	1476	7124	5577	1719	9290	7156	2644	9035	6963	2774	8525	6377	2956	8270	6384	3060
	18	25	6203	5012	1234	7998	6083	1492	7474	5930	1736	9800	7671	2670	9460	7414	2774	8950	6828	2982	8610	6770	3086
	19	27	6369	5137	1250	8231	6347	1509	7706	6150	1754	10140	7993	2696	9800	7735	2800	9290	7149	2982	8950	7092	3086
	22	30	6919	5096	1250	8988	6303	1509	8405	6106	1754	11075	7929	2722	10735	7671	2826	9800	7278	3086	9205	7349	3242
	24	32	7305	5096	1266	9512	6303	1525	8871	6106	1771	11755	7929	2722	11330	7671	2852	10140	7407	3164	9375	7542	3346
1.5+1.5+1.8+6.0	12	18	6073	4753	1203	6975	5886	1459	6567	5733	1684	8470	7356	2592	8215	7099	2696	7790	6577	2878	7535	6520	2982
	14	20	6073	4753	1203	7382	5886	1459	6975	5777	1701	8980	7356	2618	8725	7163	2722	8215	6577	2904	7960	6584	3034
	16	22	6073	4962	1219	7790	5886	1476	7324	5777	1719	9490	7356	2644	9235	7163	2774	8725	6577	2956	8470	6584	3060
	18	25	6403	5212	1234	8198	6283	1492	7674	6130	1736	10000	7871	2670	9660	7614	2774	9150	7028	2982	8810	6970	3086
	19	27	6569	5337	1250	8431	6547	1509	7906	6350	1754	10340	8193	2696	10000	7935	2800	9490	7349	2982	9150	7292	3086
	22	30	7119	5296	1250	9188	6503	1509	8605	6306	1754	11275	8129	2722	10935	7871	2826	10000	7478	3086	9405	7549	3242
	24	32	7505	5296	1266	9712	6503	1525	9071	6306	1771	11955	8129	2722	11530	7871	2852	10340	7607	3164	9575	7742	3346
1.5+1.5+2.5+2.5	12	18	4304	3062	829	5153	4316	1041	4769	3984	1227	6560	5512	1978	6320	5270	2064	5920	4967	2215	5680	4724	2301
	14	20	4304	3062	829	5536	4316	1041	5153	4026	1242	7040	5512	2000	6800	5330	2086	6320	4967	2236	6080	4785	2344
	16	22	4304	3258	842	5920	4316	1055	5481	4026	1256	7520	5512	2021	7280	5330	2129	6800	4967	2279	6560	4785	2365
	18	25	4615	3494	855	6304	4690	1069	5810	4358	1270	8000	5996	2043	7680	5754	2129	7200	5391	2301	6880	5148	2387
	19	27	4770	3612	868	6523	4939	1082	6030	4565	1285	8320	6299	2064	8000	6057	2150	7520	5694	2301	7200	5451	2387
	22	30	5289	3572	868	7236	4897	1082	6687	4524	1285	9200	6239	2086	8880	5996	2172	8000	5815	2387	7440	5694	2516
	24	32	5652	3572	881	7729	4897	1096	7126	4524	1299	9840	6239	2086	9440	5996	2193	8320	5936	2451	7600	5875	2602
1.5+1.5+2.5+3.5	12	18	5073	3753	1003	5975	5086	1259	5567	4733	1484	7470	6356	2392	7215	6099	2496	6790	5777	2678	6535	5520	2782
	14	20	5073	3753	1003	6382	5086	1259	5975	4777	1501	7980	6356	2418	7725	6163	2522	7215	5777	2704	6960	5584	2834
	16	22	5073	3962	1019	6790	5086	1276	6324	4777	1519	8490	6356	2444	8235	6163	2574	7725	5777	2756	7470	5584	2860
	18	25	5403	4212	1034	7198	5483	1292	6674	5130	1536	9000	6871	2470	8660	6614	2574	8150	6228	2782	7810	5970	2886
	19	27	5569	4337	1050	7431	5747	1309	6906	5350	1554	9340	7193	2496	9000	6935	2600	8490	6549	2782	8150	6292	2886
	22	30	6119	4296	1050	8188	5703	1309	7605	5306	1554	10275	7129	2522	9935	6871	2626	9000	6678	2886	8405	6549	3042
	24	32	6505	4296	1066	8712	5703	1325	8071	5306	1571	10955	7129	2522	10530	6871	2652	9340	6807	2964	8575	6742	3146
1.5+1.5+2.5+4.2	12	18	5773	4453	1203	6675	5586	1459	6267	5433	1684	8170	7056	2592	7915	6799	2696	7490	6277	2878	7235	6220	2982
	14	20	5773	4453	1203	7082	5586	1459	6675	5477	1701	8680	7056	2618	8425	6863	2722	7915	6277	2904	7660	6284	3034
	16	22	5773	4662	1219	7490	5586	1476	7024	5477	1719	9190	7056	2644	8935	6863	2774	8425	6277	2956	8170	6284	3060
	18	25	6103	4912	1234	7898	5983	1492	7374	5830	1736	9700	7571	2670	9360	7314	2774	8850	6728	2982	8510	6670	3086
	19	27	6269	5037	1250	8131	6247	1509	7606	6050	1754	10040	7893	2696	9700	7635	2800	9190	7049	2982	8850	6992	3086
	22	30	6819	4996	1250	8888	6203	1509	8305	6006	1754	10975	7829	2722	10635	7571	2826	9700	7178	3086	9105	7249	3242
	24	32	7205	4996	1266	9412	6203	1525	8771	6006	1771	11655	7829	2722	11230	7571	2852	10040	7307	3164	9275	7442	3346

	INDOOR		OUTDOOR TEMPERATURE (°CDB)																				
	EWB	EDB	-10			21			27			32			35			40			43		
	°C	°C	TC	SHC	PI	TC	SHC	PI	TC	SHC	PI	TC	SHC	PI	TC	SHC	PI	TC	SHC	PI	TC	SHC	PI
1.5+1.5+2.5+5.0	12	18	6073	4753	1403	6975	5886	1659	6567	5733	1884	8470	7356	2792	8215	7099	2896	7790	6577	3078	7535	6520	3182
	14	20	6073	4753	1403	7382	5886	1659	6975	5777	1901	8980	7356	2818	8725	7163	2922	8215	6577	3104	7960	6584	3234
	16	22	6073	4962	1419	7790	5886	1676	7324	5777	1919	9490	7356	2844	9235	7163	2974	8725	6577	3156	8470	6584	3260
	18	25	6403	5212	1434	8198	6283	1692	7674	6130	1936	10000	7871	2870	9660	7614	2974	9150	7028	3182	8810	6970	3286
	19	27	6569	5337	1450	8431	6547	1709	7906	6350	1954	10340	8193	2896	10000	7935	3000	9490	7349	3182	9150	7292	3286
	22	30	7119	5296	1450	9188	6503	1709	8605	6306	1954	11275	8129	2922	10935	7871	3026	10000	7478	3286	9405	7549	3442
	24	32	7505	5296	1466	9712	6503	1725	9071	6306	1971	11955	8129	2922	11530	7871	3052	10340	7607	3364	9575	7742	3546
1.5+1.5+2.5+6.0	12	18	6073	4753	1403	6975	5886	1659	6567	5733	1884	8470	7356	2792	8215	7099	2896	7790	6577	3078	7535	6520	3182
	14	20	6073	4753	1403	7382	5886	1659	6975	5777	1901	8980	7356	2818	8725	7163	2922	8215	6577	3104	7960	6584	3234
	16	22	6073	4962	1419	7790	5886	1676	7324	5777	1919	9490	7356	2844	9235	7163	2974	8725	6577	3156	8470	6584	3260
	18	25	6403	5212	1434	8198	6283	1692	7674	6130	1936	10000	7871	2870	9660	7614	2974	9150	7028	3182	8810	6970	3286
	19	27	6569	5337	1450	8431	6547	1709	7906	6350	1954	10340	8193	2896	10000	7935	3000	9490	7349	3182	9150	7292	3286
	22	30	7119	5296	1450	9188	6503	1709	8605	6306	1954	11275	8129	2922	10935	7871	3026	10000	7478	3286	9405	7549	3442
	24	32	7505	5296	1466	9712	6503	1725	9071	6306	1971	11955	8129	2922	11530	7871	3052	10340	7607	3364	9575	7742	3546
1.5+1.5+3.5+3.5	12	18	6073	4753	1403	6975	5886	1659	6567	5733	1884	8470	7356	2792	8215	7099	2896	7790	6577	3078	7535	6520	3182
	14	20	6073	4753	1403	7382	5886	1659	6975	5777	1901	8980	7356	2818	8725	7163	2922	8215	6577	3104	7960	6584	3234
	16	22	6073	4962	1419	7790	5886	1676	7324	5777	1919	9490	7356	2844	9235	7163	2974	8725	6577	3156	8470	6584	3260
	18	25	6403	5212	1434	8198	6283	1692	7674	6130	1936	10000	7871	2870	9660	7614	2974	9150	7028	3182	8810	6970	3286
	19	27	6569	5337	1450	8431	6547	1709	7906	6350	1954	10340	8193	2896	10000	7935	3000	9490	7349	3182	9150	7292	3286
	22	30	7119	5296	1450	9188	6503	1709	8605	6306	1954	11275	8129	2922	10935	7871	3026	10000	7478	3286	9405	7549	3442
	24	32	7505	5296	1466	9712	6503	1725	9071	6306	1971	11955	8129	2922	11530	7871	3052	10340	7607	3364	9575	7742	3546
1.5+1.5+3.5+4.2	12	18	6073	4753	1553	6975	5886	1809	6567	5733	2034	8470	7356	2942	8215	7099	3046	7790	6577	3228	7535	6520	3332
	14	20	6073	4753	1553	7382	5886	1809	6975	5777	2051	8980	7356	2968	8725	7163	3072	8215	6577	3254	7960	6584	3384
	16	22	6073	4962	1569	7790	5886	1826	7324	5777	2069	9490	7356	2994	9235	7163	3124	8725	6577	3306	8470	6584	3410
	18	25	6403	5212	1584	8198	6283	1842	7674	6130	2086	10000	7871	3020	9660	7614	3124	9150	7028	3332	8810	6970	3436
	19	27	6569	5337	1600	8431	6547	1859	7906	6350	2104	10340	8193	3046	10000	7935	3150	9490	7349	3332	9150	7292	3436
	22	30	7119	5296	1600	9188	6503	1859	8605	6306	2104	11275	8129	3072	10935	7871	3176	10000	7478	3436	9405	7549	3592
	24	32	7505	5296	1616	9712	6503	1875	9071	6306	2121	11955	8129	3072	11530	7871	3202	10340	7607	3514	9575	7742	3696
1.5+1.5+3.5+5.0	12	18	6073	4753	1703	6975	5886	1959	6567	5733	2184	8470	7356	3092	8215	7099	3196	7790	6577	3378	7535	6520	3482
	14	20	6073	4753	1703	7382	5886	1959	6975	5777	2201	8980	7356	3118	8725	7163	3222	8215	6577	3404	7960	6584	3534
	16	22	6073	4962	1719	7790	5886	1976	7324	5777	2219	9490	7356	3144	9235	7163	3274	8725	6577	3456	8470	6584	3560
	18	25	6403	5212	1734	8198	6283	1992	7674	6130	2236	10000	7871	3170	9660	7614	3274	9150	7028	3482	8810	6970	3586
	19	27	6569	5337	1750	8431	6547	2009	7906	6350	2254	10340	8193	3196	10000	7935	3300	9490	7349	3482	9150	7292	3586
	22	30	7119	5296	1750	9188	6503	2009	8605	6306	2254	11275	8129	3222	10935	7871	3326	10000	7478	3586	9405	7549	3742
	24	32	7505	5296	1766	9712	6503	2025	9071	6306	2271	11955	8129	3222	11530	7871	3352	10340	7607	3664	9575	7742	3846
1.5+1.5+3.5+6.0	12	18	6073	4753	1703	6975	5886	1959	6567	5733	2184	8470	7356	3092	8215	7099	3196	7790	6577	3378	7535	6520	3482
	14	20	6073	4753	1703	7382	5886	1959	6975	5777	2201	8980	7356	3118	8725	7163	3222	8215	6577	3404	7960	6584	3534
	16	22	6073	4962	1719	7790	5886	1976	7324	5777	2219	9490	7356	3144	9235	7163	3274	8725	6577	3456	8470	6584	3560
	18	25	6403	5212	1734	8198	6283	1992	7674	6130	2236	10000	7871	3170	9660	7614	3274	9150	7028	3482	8810	6970	3586
	19	27	6569	5337	1750	8431	6547	2009	7906	6350	2254	10340	8193	3196	10000	7935	3300	9490	7349	3482	9150	7292	3586
	22	30	7119	5296	1750	9188	6503	2009	8605	6306	2254	11275	8129	3222	10935	7871	3326	10000	7478	3586	9405	7549	3742
	24	32	7505	5296	1766	9712	6503	2025	9071	6306	2271	11955	8129	3222	11530	7871	3352	10340	7607	3664	9575	7742	3846

	INDOOR		OUTDOOR TEMPERATURE (°CDB)																				
	EWB	EDB	-10			21			27			32			35			40			43		
	°C	°C	TC	SHC	PI	TC	SHC	PI	TC	SHC	PI	TC	SHC	PI	TC	SHC	PI	TC	SHC	PI	TC	SHC	PI
1.5+1.5+4.2+4.2	12	18	6073	4753	1703	6975	5886	1959	6567	5733	2184	8470	7356	3092	8215	7099	3196	7790	6577	3378	7535	6520	3482
	14	20	6073	4753	1703	7382	5886	1959	6975	5777	2201	8980	7356	3118	8725	7163	3222	8215	6577	3404	7960	6584	3534
	16	22	6073	4962	1719	7790	5886	1976	7324	5777	2219	9490	7356	3144	9235	7163	3274	8725	6577	3456	8470	6584	3560
	18	25	6403	5212	1734	8198	6283	1992	7674	6130	2236	10000	7871	3170	9660	7614	3274	9150	7028	3482	8810	6970	3586
	19	27	6569	5337	1750	8431	6547	2009	7906	6350	2254	10340	8193	3196	10000	7935	3300	9490	7349	3482	9150	7292	3586
	22	30	7119	5296	1750	9188	6503	2009	8605	6306	2254	11275	8129	3222	10935	7871	3326	10000	7478	3586	9405	7549	3742
	24	32	7505	5296	1766	9712	6503	2025	9071	6306	2271	11955	8129	3222	11530	7871	3352	10340	7607	3664	9575	7742	3846
1.5+1.5+4.2+5.0	12	18	6073	4753	1803	6975	5886	2059	6567	5733	2284	8470	7356	3192	8215	7099	3296	7790	6577	3478	7535	6520	3582
	14	20	6073	4753	1803	7382	5886	2059	6975	5777	2301	8980	7356	3218	8725	7163	3322	8215	6577	3504	7960	6584	3634
	16	22	6073	4962	1819	7790	5886	2076	7324	5777	2319	9490	7356	3244	9235	7163	3374	8725	6577	3556	8470	6584	3660
	18	25	6403	5212	1834	8198	6283	2092	7674	6130	2336	10000	7871	3270	9660	7614	3374	9150	7028	3582	8810	6970	3686
	19	27	6569	5337	1850	8431	6547	2109	7906	6350	2354	10340	8193	3296	10000	7935	3400	9490	7349	3582	9150	7292	3686
	22	30	7119	5296	1850	9188	6503	2109	8605	6306	2354	11275	8129	3322	10935	7871	3426	10000	7478	3686	9405	7549	3842
	24	32	7505	5296	1866	9712	6503	2125	9071	6306	2371	11955	8129	3322	11530	7871	3452	10340	7607	3764	9575	7742	3946
1.5+1.5+4.2+6.0	12	18	6073	4753	1803	6975	5886	2059	6567	5733	2284	8470	7356	3192	8215	7099	3296	7790	6577	3478	7535	6520	3582
	14	20	6073	4753	1803	7382	5886	2059	6975	5777	2301	8980	7356	3218	8725	7163	3322	8215	6577	3504	7960	6584	3634
	16	22	6073	4962	1819	7790	5886	2076	7324	5777	2319	9490	7356	3244	9235	7163	3374	8725	6577	3556	8470	6584	3660
	18	25	6403	5212	1834	8198	6283	2092	7674	6130	2336	10000	7871	3270	9660	7614	3374	9150	7028	3582	8810	6970	3686
	19	27	6569	5337	1850	8431	6547	2109	7906	6350	2354	10340	8193	3296	10000	7935	3400	9490	7349	3582	9150	7292	3686
	22	30	7119	5296	1850	9188	6503	2109	8605	6306	2354	11275	8129	3322	10935	7871	3426	10000	7478	3686	9405	7549	3842
	24	32	7505	5296	1866	9712	6503	2125	9071	6306	2371	11955	8129	3322	11530	7871	3452	10340	7607	3764	9575	7742	3946
1.5+1.5+5.0+5.0	12	18	6073	4753	1903	6975	5886	2159	6567	5733	2384	8470	7356	3292	8215	7099	3396	7790	6577	3578	7535	6520	3682
	14	20	6073	4753	1903	7382	5886	2159	6975	5777	2401	8980	7356	3318	8725	7163	3422	8215	6577	3604	7960	6584	3734
	16	22	6073	4962	1919	7790	5886	2176	7324	5777	2419	9490	7356	3344	9235	7163	3474	8725	6577	3656	8470	6584	3760
	18	25	6403	5212	1934	8198	6283	2192	7674	6130	2436	10000	7871	3370	9660	7614	3474	9150	7028	3682	8810	6970	3786
	19	27	6569	5337	1950	8431	6547	2209	7906	6350	2454	10340	8193	3396	10000	7935	3500	9490	7349	3682	9150	7292	3786
	22	30	7119	5296	1950	9188	6503	2209	8605	6306	2454	11275	8129	3422	10935	7871	3526	10000	7478	3786	9405	7549	3942
	24	32	7505	5296	1966	9712	6503	2225	9071	6306	2471	11955	8129	3422	11530	7871	3552	10340	7607	3864	9575	7742	4046
1.5+1.5+5.0+6.0	12	18	6073	4753	2013	6975	5886	2269	6567	5733	2494	8470	7356	3402	8215	7099	3506	7790	6577	3688	7535	6520	3792
	14	20	6073	4753	2013	7382	5886	2269	6975	5777	2511	8980	7356	3428	8725	7163	3532	8215	6577	3714	7960	6584	3844
	16	22	6073	4962	2029	7790	5886	2286	7324	5777	2529	9490	7356	3454	9235	7163	3584	8725	6577	3766	8470	6584	3870
	18	25	6403	5212	2044	8198	6283	2302	7674	6130	2546	10000	7871	3480	9660	7614	3584	9150	7028	3792	8810	6970	3896
	19	27	6569	5337	2060	8431	6547	2319	7906	6350	2564	10340	8193	3506	10000	7935	3610	9490	7349	3792	9150	7292	3896
	22	30	7119	5296	2060	9188	6503	2319	8605	6306	2564	11275	8129	3532	10935	7871	3636	10000	7478	3896	9405	7549	4052
	24	32	7505	5296	2076	9712	6503	2335	9071	6306	2581	11955	8129	3532	11530	7871	3662	10340	7607	3974	9575	7742	4156
1.5+1.5+6.0+6.0	12	18	6073	4753	2013	6975	5886	2269	6567	5733	2494	8470	7356	3402	8215	7099	3506	7790	6577	3688	7535	6520	3792
	14	20	6073	4753	2013	7382	5886	2269	6975	5777	2511	8980	7356	3428	8725	7163	3532	8215	6577	3714	7960	6584	3844
	16	22	6073	4962	2029	7790	5886	2286	7324	5777	2529	9490	7356	3454	9235	7163	3584	8725	6577	3766	8470	6584	3870
	18	25	6403	5212	2044	8198	6283	2302	7674	6130	2546	10000	7871	3480	9660	7614	3584	9150	7028	3792	8810	6970	3896
	19	27	6569	5337	2060	8431	6547	2319	7906	6350	2564	10340	8193	3506	10000	7935	3610	9490	7349	3792	9150	7292	3896
	22	30	7119	5296	2060	9188	6503	2319	8605	6306	2564	11275	8129	3532	10935	7871	3636	10000	7478	3896	9405	7549	4052
	24	32	7505	5296	2076	9712	6503	2335	9071	6306	2581	11955	8129	3532	11530	7871	3662	10340	7607	3974	9575	7742	4156

	INDOOR		OUTDOOR TEMPERATURE (°CDB)																				
	EWB	EDB	-10			21			27			32			35			40			43		
	°C	°C	TC	SHC	PI	TC	SHC	PI	TC	SHC	PI	TC	SHC	PI	TC	SHC	PI	TC	SHC	PI	TC	SHC	PI
1.5+1.8+1.8+1.8	12	18	3712	2641	826	4444	3723	1036	4113	3436	1221	5658	4754	1969	5451	4545	2054	5106	4284	2204	4899	4075	2290
	14	20	3712	2641	826	4775	3723	1036	4444	3472	1236	6072	4754	1990	5865	4597	2076	5451	4284	2226	5244	4127	2333
	16	22	3712	2810	838	5106	3723	1050	4728	3472	1250	6486	4754	2012	6279	4597	2119	5865	4284	2268	5658	4127	2354
	18	25	3980	3014	851	5437	4045	1064	5011	3758	1265	6900	5172	2033	6624	4963	2119	6210	4649	2290	5934	4440	2375
	19	27	4114	3115	864	5626	4260	1077	5201	3937	1279	7176	5433	2054	6900	5224	2140	6486	4911	2290	6210	4702	2375
	22	30	4562	3081	864	6241	4224	1077	5768	3902	1279	7935	5381	2076	7659	5172	2161	6900	5015	2375	6417	4911	2504
	24	32	4875	3081	877	6666	4224	1091	6146	3902	1293	8487	5381	2076	8142	5172	2183	7176	5120	2440	6555	5067	2589
1.5+1.8+1.8+2.5	12	18	4089	2909	826	4895	4100	1036	4530	3785	1221	6232	5236	1969	6004	5006	2054	5624	4718	2204	5396	4488	2290
	14	20	4089	2909	826	5259	4100	1036	4895	3824	1236	6688	5236	1990	6460	5064	2076	6004	4718	2226	5776	4546	2333
	16	22	4089	3095	838	5624	4100	1050	5207	3824	1250	7144	5236	2012	6916	5064	2119	6460	4718	2268	6232	4546	2354
	18	25	4384	3319	851	5989	4455	1064	5520	4140	1265	7600	5697	2033	7296	5466	2119	6840	5121	2290	6536	4891	2375
	19	27	4532	3431	864	6197	4692	1077	5728	4337	1279	7904	5984	2054	7600	5754	2140	7144	5409	2290	6840	5179	2375
	22	30	5024	3394	864	6874	4652	1077	6353	4297	1279	8740	5927	2076	8436	5697	2161	7600	5524	2375	7068	5409	2504
	24	32	5369	3394	877	7342	4652	1091	6770	4297	1293	9348	5927	2076	8968	5697	2183	7904	5639	2440	7220	5581	2589
1.5+1.8+1.8+3.5	12	18	4673	3353	926	5575	4686	1136	5167	4333	1321	7070	5956	2069	6815	5699	2154	6390	5377	2304	6135	5120	2390
	14	20	4673	3353	926	5982	4686	1136	5575	4377	1336	7580	5956	2090	7325	5763	2176	6815	5377	2326	6560	5184	2433
	16	22	4673	3562	938	6390	4686	1150	5924	4377	1350	8090	5956	2112	7835	5763	2219	7325	5377	2368	7070	5184	2454
	18	25	5003	3812	951	6798	5083	1164	6274	4730	1365	8600	6471	2133	8260	6214	2219	7750	5828	2390	7410	5570	2475
	19	27	5169	3937	964	7031	5347	1177	6506	4950	1379	8940	6793	2154	8600	6535	2240	8090	6149	2390	7750	5892	2475
	22	30	5719	3896	964	7788	5303	1177	7205	4906	1379	9875	6729	2176	9535	6471	2261	8600	6278	2475	8005	6149	2604
	24	32	6105	3896	977	8312	5303	1191	7671	4906	1393	10555	6729	2176	10130	6471	2283	8940	6407	2540	8175	6342	2689
1.5+1.8+1.8+4.2	12	18	5373	4053	1236	6275	5386	1446	5867	5033	1631	7770	6656	2379	7515	6399	2464	7090	6077	2614	6835	5820	2700
	14	20	5373	4053	1236	6682	5386	1446	6275	5077	1646	8280	6656	2400	8025	6463	2486	7515	6077	2636	7260	5884	2743
	16	22	5373	4262	1248	7090	5386	1460	6624	5077	1660	8790	6656	2422	8535	6463	2529	8025	6077	2678	7770	5884	2764
	18	25	5703	4512	1261	7498	5783	1474	6974	5430	1675	9300	7171	2443	8960	6914	2529	8450	6528	2700	8110	6270	2785
	19	27	5869	4637	1274	7731	6047	1487	7206	5650	1689	9640	7493	2464	9300	7235	2550	8790	6849	2700	8450	6592	2785
	22	30	6419	4596	1274	8488	6003	1487	7905	5606	1689	10575	7429	2486	10235	7171	2571	9300	6978	2785	8705	6849	2914
	24	32	6805	4596	1287	9012	6003	1501	8371	5606	1703	11255	7429	2486	10830	7171	2593	9640	7107	2850	8875	7042	2999
1.5+1.8+1.8+5.0	12	18	6073	4753	1203	6975	5886	1459	6567	5733	1684	8470	7356	2592	8215	7099	2696	7790	6577	2878	7535	6520	2982
	14	20	6073	4753	1203	7382	5886	1459	6975	5777	1701	8980	7356	2618	8725	7163	2722	8215	6577	2904	7960	6584	3034
	16	22	6073	4962	1219	7790	5886	1476	7324	5777	1719	9490	7356	2644	9235	7163	2774	8725	6577	2956	8470	6584	3060
	18	25	6403	5212	1234	8198	6283	1492	7674	6130	1736	10000	7871	2670	9660	7614	2774	9150	7028	2982	8810	6970	3086
	19	27	6569	5337	1250	8431	6547	1509	7906	6350	1754	10340	8193	2696	10000	7935	2800	9490	7349	2982	9150	7292	3086
	22	30	7119	5296	1250	9188	6503	1509	8605	6306	1754	11275	8129	2722	10935	7871	2826	10000	7478	3086	9405	7549	3242
	24	32	7505	5296	1266	9712	6503	1525	9071	6306	1771	11955	8129	2722	11530	7871	2852	10340	7607	3164	9575	7742	3346
1.5+1.8+1.8+6.0	12	18	6073	4753	1203	6975	5886	1459	6567	5733	1684	8470	7356	2592	8215	7099	2696	7790	6577	2878	7535	6520	2982
	14	20	6073	4753	1203	7382	5886	1459	6975	5777	1701	8980	7356	2618	8725	7163	2722	8215	6577	2904	7960	6584	3034
	16	22	6073	4962	1219	7790	5886	1476	7324	5777	1719	9490	7356	2644	9235	7163	2774	8725	6577	2956	8470	6584	3060
	18	25	6403	5212	1234	8198	6283	1492	7674	6130	1736	10000	7871	2670	9660	7614	2774	9150	7028	2982	8810	6970	3086
	19	27	6569	5337	1250	8431	6547	1509	7906	6350	1754	10340	8193	2696	10000	7935	2800	9490	7349	2982	9150	7292	3086
	22	30	7119	5296	1250	9188	6503	1509	8605	6306	1754	11275	8129	2722	10935	7871	2826	10000	7478	3086	9405	7549	3242
	24	32	7505	5296	1266	9712	6503	1525	9071	6306	1771	11955	8129	2722	11530	7871	2852	10340	7607	3164	9575	7742	3346

	INDOOR		OUTDOOR TEMPERATURE (°CDB)																				
	EWB	EDB	-10			21			27			32			35			40			43		
	°C	°C	TC	SHC	PI	TC	SHC	PI	TC	SHC	PI	TC	SHC	PI	TC	SHC	PI	TC	SHC	PI	TC	SHC	PI
1.5+1.8+2.5+2.5	12	18	4465	3177	857	5346	4478	1027	4948	4134	1064	6806	5718	2021	6557	5467	2130	6142	5153	2322	5893	4902	2432
	14	20	4465	3177	857	5744	4478	1027	5346	4177	1082	7304	5718	2048	7055	5530	2158	6557	5153	2350	6308	4964	2487
	16	22	4465	3381	874	6142	4478	1044	5687	4177	1101	7802	5718	2076	7553	5530	2213	7055	5153	2404	6806	4964	2514
	18	25	4788	3625	890	6540	4865	1062	6028	4521	1119	8300	6221	2103	7968	5970	2213	7470	5593	2432	7138	5341	2541
	19	27	4949	3747	907	6768	5124	1079	6256	4736	1137	8632	6535	2130	8300	6284	2240	7802	5907	2432	7470	5656	2541
	22	30	5487	3706	907	7507	5081	1079	6938	4693	1137	9545	6473	2158	9213	6221	2267	8300	6033	2541	7719	5907	2706
	24	32	5864	3706	923	8019	5081	1097	7393	4693	1156	10209	6473	2158	9794	6221	2295	8632	6158	2624	7885	6096	2815
1.5+1.8+2.5+3.5	12	18	4965	3677	1167	5846	4978	1337	5948	5134	1374	7806	6718	2331	7557	6467	2440	7142	6153	2632	6893	5902	2742
	14	20	4965	3677	1167	6244	4978	1337	6346	5177	1392	8304	6718	2358	8055	6530	2468	7557	6153	2660	7308	5964	2797
	16	22	4965	3881	1184	6642	4978	1354	6687	5177	1411	8802	6718	2386	8553	6530	2523	8055	6153	2714	7806	5964	2824
	18	25	5288	4125	1200	7040	5365	1372	7028	5521	1429	9300	7221	2413	8968	6970	2523	8470	6593	2742	8138	6341	2851
	19	27	5449	4247	1217	7268	5624	1389	7256	5736	1447	9632	7535	2440	9300	7284	2550	8802	6907	2742	8470	6656	2851
	22	30	5987	4206	1217	8007	5581	1389	7938	5693	1447	10545	7473	2468	10213	7221	2577	9300	7033	2851	8719	6907	3016
	24	32	6364	4206	1233	8519	5581	1407	8393	5693	1466	11209	7473	2468	10794	7221	2605	9632	7158	2934	8885	7096	3125
1.5+1.8+2.5+4.2	12	18	6073	4753	1203	6975	5886	1459	6567	5733	1684	8470	7356	2592	8215	7099	2696	7790	6577	2878	7535	6520	2982
	14	20	6073	4753	1203	7382	5886	1459	6975	5777	1701	8980	7356	2618	8725	7163	2722	8215	6577	2904	7960	6584	3034
	16	22	6073	4962	1219	7790	5886	1476	7324	5777	1719	9490	7356	2644	9235	7163	2774	8725	6577	2956	8470	6584	3060
	18	25	6403	5212	1234	8198	6283	1492	7674	6130	1736	10000	7871	2670	9660	7614	2774	9150	7028	2982	8810	6970	3086
	19	27	6569	5337	1250	8431	6547	1509	7906	6350	1754	10340	8193	2696	10000	7935	2800	9490	7349	2982	9150	7292	3086
	22	30	7119	5296	1250	9188	6503	1509	8605	6306	1754	11275	8129	2722	10935	7871	2826	10000	7478	3086	9405	7549	3242
	24	32	7505	5296	1266	9712	6503	1525	9071	6306	1771	11955	8129	2722	11530	7871	2852	10340	7607	3164	9575	7742	3346
1.5+1.8+2.5+5.0	12	18	6073	4753	1203	6975	5886	1459	6567	5733	1684	8470	7356	2592	8215	7099	2696	7790	6577	2878	7535	6520	2982
	14	20	6073	4753	1203	7382	5886	1459	6975	5777	1701	8980	7356	2618	8725	7163	2722	8215	6577	2904	7960	6584	3034
	16	22	6073	4962	1219	7790	5886	1476	7324	5777	1719	9490	7356	2644	9235	7163	2774	8725	6577	2956	8470	6584	3060
	18	25	6403	5212	1234	8198	6283	1492	7674	6130	1736	10000	7871	2670	9660	7614	2774	9150	7028	2982	8810	6970	3086
	19	27	6569	5337	1250	8431	6547	1509	7906	6350	1754	10340	8193	2696	10000	7935	2800	9490	7349	2982	9150	7292	3086
	22	30	7119	5296	1250	9188	6503	1509	8605	6306	1754	11275	8129	2722	10935	7871	2826	10000	7478	3086	9405	7549	3242
	24	32	7505	5296	1266	9712	6503	1525	9071	6306	1771	11955	8129	2722	11530	7871	2852	10340	7607	3164	9575	7742	3346
1.5+1.8+2.5+6.0	12	18	6073	4753	1553	6975	5886	1809	6567	5733	2034	8470	7356	2942	8215	7099	3046	7790	6577	3228	7535	6520	3332
	14	20	6073	4753	1553	7382	5886	1809	6975	5777	2051	8980	7356	2968	8725	7163	3072	8215	6577	3254	7960	6584	3384
	16	22	6073	4962	1569	7790	5886	1826	7324	5777	2069	9490	7356	2994	9235	7163	3124	8725	6577	3306	8470	6584	3410
	18	25	6403	5212	1584	8198	6283	1842	7674	6130	2086	10000	7871	3020	9660	7614	3124	9150	7028	3332	8810	6970	3436
	19	27	6569	5337	1600	8431	6547	1859	7906	6350	2104	10340	8193	3046	10000	7935	3150	9490	7349	3332	9150	7292	3436
	22	30	7119	5296	1600	9188	6503	1859	8605	6306	2104	11275	8129	3072	10935	7871	3176	10000	7478	3436	9405	7549	3592
	24	32	7505	5296	1616	9712	6503	1875	9071	6306	2121	11955	8129	3072	11530	7871	3202	10340	7607	3514	9575	7742	3696
1.5+1.8+3.5+3.5	12	18	6073	4753	1553	6975	5886	1809	6567	5733	2034	8470	7356	2942	8215	7099	3046	7790	6577	3228	7535	6520	3332
	14	20	6073	4753	1553	7382	5886	1809	6975	5777	2051	8980	7356	2968	8725	7163	3072	8215	6577	3254	7960	6584	3384
	16	22	6073	4962	1569	7790	5886	1826	7324	5777	2069	9490	7356	2994	9235	7163	3124	8725	6577	3306	8470	6584	3410
	18	25	6403	5212	1584	8198	6283	1842	7674	6130	2086	10000	7871	3020	9660	7614	3124	9150	7028	3332	8810	6970	3436
	19	27	6569	5337	1600	8431	6547	1859	7906	6350	2104	10340	8193	3046	10000	7935	3150	9490	7349	3332	9150	7292	3436
	22	30	7119	5296	1600	9188	6503	1859	8605	6306	2104	11275	8129	3072	10935	7871	3176	10000	7478	3436	9405	7549	3592
	24	32	7505	5296	1616	9712	6503	1875	9071	6306	2121	11955	8129	3072	11530	7871	3202	10340	7607	3514	9575	7742	3696

	INDOOR		OUTDOOR TEMPERATURE (°CDB)																				
	EWB	EDB	-10			21			27			32			35			40			43		
	°C	°C	TC	SHC	PI	TC	SHC	PI	TC	SHC	PI	TC	SHC	PI	TC	SHC	PI	TC	SHC	PI	TC	SHC	PI
1.5+1.8+3.5+4.2	12	18	6073	4753	1553	6975	5886	1809	6567	5733	2034	8470	7356	2942	8215	7099	3046	7790	6577	3228	7535	6520	3332
	14	20	6073	4753	1553	7382	5886	1809	6975	5777	2051	8980	7356	2968	8725	7163	3072	8215	6577	3254	7960	6584	3384
	16	22	6073	4962	1569	7790	5886	1826	7324	5777	2069	9490	7356	2994	9235	7163	3124	8725	6577	3306	8470	6584	3410
	18	25	6403	5212	1584	8198	6283	1842	7674	6130	2086	10000	7871	3020	9660	7614	3124	9150	7028	3332	8810	6970	3436
	19	27	6569	5337	1600	8431	6547	1859	7906	6350	2104	10340	8193	3046	10000	7935	3150	9490	7349	3332	9150	7292	3436
	22	30	7119	5296	1600	9188	6503	1859	8605	6306	2104	11275	8129	3072	10935	7871	3176	10000	7478	3436	9405	7549	3592
	24	32	7505	5296	1616	9712	6503	1875	9071	6306	2121	11955	8129	3072	11530	7871	3202	10340	7607	3514	9575	7742	3696
1.5+1.8+3.5+5.0	12	18	6073	4753	1803	6975	5886	2059	6567	5733	2284	8470	7356	3192	8215	7099	3296	7790	6577	3478	7535	6520	3582
	14	20	6073	4753	1803	7382	5886	2059	6975	5777	2301	8980	7356	3218	8725	7163	3322	8215	6577	3504	7960	6584	3634
	16	22	6073	4962	1819	7790	5886	2076	7324	5777	2319	9490	7356	3244	9235	7163	3374	8725	6577	3556	8470	6584	3660
	18	25	6403	5212	1834	8198	6283	2092	7674	6130	2336	10000	7871	3270	9660	7614	3374	9150	7028	3582	8810	6970	3686
	19	27	6569	5337	1850	8431	6547	2109	7906	6350	2354	10340	8193	3296	10000	7935	3400	9490	7349	3582	9150	7292	3686
	22	30	7119	5296	1850	9188	6503	2109	8605	6306	2354	11275	8129	3322	10935	7871	3426	10000	7478	3686	9405	7549	3842
	24	32	7505	5296	1866	9712	6503	2125	9071	6306	2371	11955	8129	3322	11530	7871	3452	10340	7607	3764	9575	7742	3946
1.5+1.8+3.5+6.0	12	18	6073	4753	1803	6975	5886	2059	6567	5733	2284	8470	7356	3192	8215	7099	3296	7790	6577	3478	7535	6520	3582
	14	20	6073	4753	1803	7382	5886	2059	6975	5777	2301	8980	7356	3218	8725	7163	3322	8215	6577	3504	7960	6584	3634
	16	22	6073	4962	1819	7790	5886	2076	7324	5777	2319	9490	7356	3244	9235	7163	3374	8725	6577	3556	8470	6584	3660
	18	25	6403	5212	1834	8198	6283	2092	7674	6130	2336	10000	7871	3270	9660	7614	3374	9150	7028	3582	8810	6970	3686
	19	27	6569	5337	1850	8431	6547	2109	7906	6350	2354	10340	8193	3296	10000	7935	3400	9490	7349	3582	9150	7292	3686
	22	30	7119	5296	1850	9188	6503	2109	8605	6306	2354	11275	8129	3322	10935	7871	3426	10000	7478	3686	9405	7549	3842
	24	32	7505	5296	1866	9712	6503	2125	9071	6306	2371	11955	8129	3322	11530	7871	3452	10340	7607	3764	9575	7742	3946
1.5+1.8+4.2+4.2	12	18	6073	4753	1803	6975	5886	2059	6567	5733	2284	8470	7356	3192	8215	7099	3296	7790	6577	3478	7535	6520	3582
	14	20	6073	4753	1803	7382	5886	2059	6975	5777	2301	8980	7356	3218	8725	7163	3322	8215	6577	3504	7960	6584	3634
	16	22	6073	4962	1819	7790	5886	2076	7324	5777	2319	9490	7356	3244	9235	7163	3374	8725	6577	3556	8470	6584	3660
	18	25	6403	5212	1834	8198	6283	2092	7674	6130	2336	10000	7871	3270	9660	7614	3374	9150	7028	3582	8810	6970	3686
	19	27	6569	5337	1850	8431	6547	2109	7906	6350	2354	10340	8193	3296	10000	7935	3400	9490	7349	3582	9150	7292	3686
	22	30	7119	5296	1850	9188	6503	2109	8605	6306	2354	11275	8129	3322	10935	7871	3426	10000	7478	3686	9405	7549	3842
	24	32	7505	5296	1866	9712	6503	2125	9071	6306	2371	11955	8129	3322	11530	7871	3452	10340	7607	3764	9575	7742	3946
1.5+1.8+4.2+5.0	12	18	6073	4753	1903	6975	5886	2159	6567	5733	2384	8470	7356	3292	8215	7099	3396	7790	6577	3578	7535	6520	3682
	14	20	6073	4753	1903	7382	5886	2159	6975	5777	2401	8980	7356	3318	8725	7163	3422	8215	6577	3604	7960	6584	3734
	16	22	6073	4962	1919	7790	5886	2176	7324	5777	2419	9490	7356	3344	9235	7163	3474	8725	6577	3656	8470	6584	3760
	18	25	6403	5212	1934	8198	6283	2192	7674	6130	2436	10000	7871	3370	9660	7614	3474	9150	7028	3682	8810	6970	3786
	19	27	6569	5337	1950	8431	6547	2209	7906	6350	2454	10340	8193	3396	10000	7935	3500	9490	7349	3682	9150	7292	3786
	22	30	7119	5296	1950	9188	6503	2209	8605	6306	2454	11275	8129	3422	10935	7871	3526	10000	7478	3786	9405	7549	3942
	24	32	7505	5296	1966	9712	6503	2225	9071	6306	2471	11955	8129	3422	11530	7871	3552	10340	7607	3864	9575	7742	4046
1.5+1.8+4.2+6.0	12	18	6073	4753	1903	6975	5886	2159	6567	5733	2384	8470	7356	3292	8215	7099	3396	7790	6577	3578	7535	6520	3682
	14	20	6073	4753	1903	7382	5886	2159	6975	5777	2401	8980	7356	3318	8725	7163	3422	8215	6577	3604	7960	6584	3734
	16	22	6073	4962	1919	7790	5886	2176	7324	5777	2419	9490	7356	3344	9235	7163	3474	8725	6577	3656	8470	6584	3760
	18	25	6403	5212	1934	8198	6283	2192	7674	6130	2436	10000	7871	3370	9660	7614	3474	9150	7028	3682	8810	6970	3786
	19	27	6569	5337	1950	8431	6547	2209	7906	6350	2454	10340	8193	3396	10000	7935	3500	9490	7349	3682	9150	7292	3786
	22	30	7119	5296	1950	9188	6503	2209	8605	6306	2454	11275	8129	3422	10935	7871	3526	10000	7478	3786	9405	7549	3942
	24	32	7505	5296	1966	9712	6503	2225	9071	6306	2471	11955	8129	3422	11530	7871	3552	10340	7607	3864	9575	7742	4046

	INDOOR		OUTDOOR TEMPERATURE (°CDB)																				
	EWB	EDB	-10			21			27			32			35			40			43		
	°C	°C	TC	SHC	PI	TC	SHC	PI	TC	SHC	PI	TC	SHC	PI	TC	SHC	PI	TC	SHC	PI	TC	SHC	PI
1.5+1.8+5.0+5.0	12	18	6073	4753	2053	6975	5886	2309	6567	5733	2534	8470	7356	3442	8215	7099	3546	7790	6577	3728	7535	6520	3832
	14	20	6073	4753	2053	7382	5886	2309	6975	5777	2551	8980	7356	3468	8725	7163	3572	8215	6577	3754	7960	6584	3884
	16	22	6073	4962	2069	7790	5886	2326	7324	5777	2569	9490	7356	3494	9235	7163	3624	8725	6577	3806	8470	6584	3910
	18	25	6403	5212	2084	8198	6283	2342	7674	6130	2586	10000	7871	3520	9660	7614	3624	9150	7028	3832	8810	6970	3936
	19	27	6569	5337	2100	8431	6547	2359	7906	6350	2604	10340	8193	3546	10000	7935	3650	9490	7349	3832	9150	7292	3936
	22	30	7119	5296	2100	9188	6503	2359	8605	6306	2604	11275	8129	3572	10935	7871	3676	10000	7478	3936	9405	7549	4092
	24	32	7505	5296	2116	9712	6503	2375	9071	6306	2621	11955	8129	3572	11530	7871	3702	10340	7607	4014	9575	7742	4196
1.5+1.8+5.0+6.0	12	18	6073	4753	2403	6975	5886	2659	6567	5733	2884	8470	7356	3792	8215	7099	3896	7790	6577	4078	7535	6520	4182
	14	20	6073	4753	2403	7382	5886	2659	6975	5777	2901	8980	7356	3818	8725	7163	3922	8215	6577	4104	7960	6584	4234
	16	22	6073	4962	2419	7790	5886	2676	7324	5777	2919	9490	7356	3844	9235	7163	3974	8725	6577	4156	8470	6584	4260
	18	25	6403	5212	2434	8198	6283	2692	7674	6130	2936	10000	7871	3870	9660	7614	3974	9150	7028	4182	8810	6970	4286
	19	27	6569	5337	2450	8431	6547	2709	7906	6350	2954	10340	8193	3896	10000	7935	4000	9490	7349	4182	9150	7292	4286
	22	30	7119	5296	2450	9188	6503	2709	8605	6306	2954	11275	8129	3922	10935	7871	4026	10000	7478	4286	9405	7549	4442
	24	32	7505	5296	2466	9712	6503	2725	9071	6306	2971	11955	8129	3922	11530	7871	4052	10340	7607	4364	9575	7742	4546
1.5+1.8+6.0+6.0	12	18	6073	4753	2403	6975	5886	2659	6567	5733	2884	8470	7356	3792	8215	7099	3896	7790	6577	4078	7535	6520	4182
	14	20	6073	4753	2403	7382	5886	2659	6975	5777	2901	8980	7356	3818	8725	7163	3922	8215	6577	4104	7960	6584	4234
	16	22	6073	4962	2419	7790	5886	2676	7324	5777	2919	9490	7356	3844	9235	7163	3974	8725	6577	4156	8470	6584	4260
	18	25	6403	5212	2434	8198	6283	2692	7674	6130	2936	10000	7871	3870	9660	7614	3974	9150	7028	4182	8810	6970	4286
	19	27	6569	5337	2450	8431	6547	2709	7906	6350	2954	10340	8193	3896	10000	7935	4000	9490	7349	4182	9150	7292	4286
	22	30	7119	5296	2450	9188	6503	2709	8605	6306	2954	11275	8129	3922	10935	7871	4026	10000	7478	4286	9405	7549	4442
	24	32	7505	5296	2466	9712	6503	2725	9071	6306	2971	11955	8129	3922	11530	7871	4052	10340	7607	4364	9575	7742	4546
1.5+2.5+2.5+2.5	12	18	5073	3753	1157	5975	5086	1388	5567	4733	1591	7470	6356	2412	7215	6099	2506	6790	5777	2671	6535	5520	2765
	14	20	5073	3753	1157	6382	5086	1388	5975	4777	1607	7980	6356	2436	7725	6163	2530	7215	5777	2694	6960	5584	2812
	16	22	5073	3962	1171	6790	5086	1403	6324	4777	1623	8490	6356	2459	8235	6163	2577	7725	5777	2741	7470	5584	2835
	18	25	5403	4212	1185	7198	5483	1418	6674	5130	1639	9000	6871	2483	8660	6614	2577	8150	6228	2765	7810	5970	2859
	19	27	5569	4337	1199	7431	5747	1433	6906	5350	1654	9340	7193	2506	9000	6935	2600	8490	6549	2765	8150	6292	2859
	22	30	6119	4296	1199	8188	5703	1433	7605	5306	1654	10275	7129	2530	9935	6871	2624	9000	6678	2859	8405	6549	3000
	24	32	6505	4296	1213	8712	5703	1448	8071	5306	1670	10955	7129	2530	10530	6871	2647	9340	6807	2929	8575	6742	3094
1.5+2.5+2.5+3.5	12	18	6073	4753	1203	6975	5886	1459	6567	5733	1684	8470	7356	2592	8215	7099	2696	7790	6577	2878	7535	6520	2982
	14	20	6073	4753	1203	7382	5886	1459	6975	5777	1701	8980	7356	2618	8725	7163	2722	8215	6577	2904	7960	6584	3034
	16	22	6073	4962	1219	7790	5886	1476	7324	5777	1719	9490	7356	2644	9235	7163	2774	8725	6577	2956	8470	6584	3060
	18	25	6403	5212	1234	8198	6283	1492	7674	6130	1736	10000	7871	2670	9660	7614	2774	9150	7028	2982	8810	6970	3086
	19	27	6569	5337	1250	8431	6547	1509	7906	6350	1754	10340	8193	2696	10000	7935	2800	9490	7349	2982	9150	7292	3086
	22	30	7119	5296	1250	9188	6503	1509	8605	6306	1754	11275	8129	2722	10935	7871	2826	10000	7478	3086	9405	7549	3242
	24	32	7505	5296	1266	9712	6503	1525	9071	6306	1771	11955	8129	2722	11530	7871	2852	10340	7607	3164	9575	7742	3346
1.5+2.5+2.5+4.2	12	18	6073	4753	1403	6975	5886	1659	6567	5733	1884	8470	7356	2792	8215	7099	2896	7790	6577	3078	7535	6520	3182
	14	20	6073	4753	1403	7382	5886	1659	6975	5777	1901	8980	7356	2818	8725	7163	2922	8215	6577	3104	7960	6584	3234
	16	22	6073	4962	1419	7790	5886	1676	7324	5777	1919	9490	7356	2844	9235	7163	2974	8725	6577	3156	8470	6584	3260
	18	25	6403	5212	1434	8198	6283	1692	7674	6130	1936	10000	7871	2870	9660	7614	2974	9150	7028	3182	8810	6970	3286
	19	27	6569	5337	1450	8431	6547	1709	7906	6350	1954	10340	8193	2896	10000	7935	3000	9490	7349	3182	9150	7292	3286
	22	30	7119	5296	1450	9188	6503	1709	8605	6306	1954	11275	8129	2922	10935	7871	3026	10000	7478	3286	9405	7549	3442
	24	32	7505	5296	1466	9712	6503	1725	9071	6306	1971	11955	8129	2922	11530	7871	3052	10340	7607	3364	9575	7742	3546

	INDOOR		OUTDOOR TEMPERATURE (°CDB)																				
	EWB	EDB	-10			21			27			32			35			40			43		
	°C	°C	TC	SHC	PI	TC	SHC	PI	TC	SHC	PI	TC	SHC	PI	TC	SHC	PI	TC	SHC	PI	TC	SHC	PI
1.5+2.5+2.5+5.0	12	18	6073	4753	1563	6975	5886	1819	6567	5733	2044	8470	7356	2952	8215	7099	3056	7790	6577	3238	7535	6520	3342
	14	20	6073	4753	1563	7382	5886	1819	6975	5777	2061	8980	7356	2978	8725	7163	3082	8215	6577	3264	7960	6584	3394
	16	22	6073	4962	1579	7790	5886	1836	7324	5777	2079	9490	7356	3004	9235	7163	3134	8725	6577	3316	8470	6584	3420
	18	25	6403	5212	1594	8198	6283	1852	7674	6130	2096	10000	7871	3030	9660	7614	3134	9150	7028	3342	8810	6970	3446
	19	27	6569	5337	1610	8431	6547	1869	7906	6350	2114	10340	8193	3056	10000	7935	3160	9490	7349	3342	9150	7292	3446
	22	30	7119	5296	1610	9188	6503	1869	8605	6306	2114	11275	8129	3082	10935	7871	3186	10000	7478	3446	9405	7549	3602
	24	32	7505	5296	1626	9712	6503	1885	9071	6306	2131	11955	8129	3082	11530	7871	3212	10340	7607	3524	9575	7742	3706
1.5+2.5+2.5+6.0	12	18	6073	4753	1563	6975	5886	1819	6567	5733	2044	8470	7356	2952	8215	7099	3056	7790	6577	3238	7535	6520	3342
	14	20	6073	4753	1563	7382	5886	1819	6975	5777	2061	8980	7356	2978	8725	7163	3082	8215	6577	3264	7960	6584	3394
	16	22	6073	4962	1579	7790	5886	1836	7324	5777	2079	9490	7356	3004	9235	7163	3134	8725	6577	3316	8470	6584	3420
	18	25	6403	5212	1594	8198	6283	1852	7674	6130	2096	10000	7871	3030	9660	7614	3134	9150	7028	3342	8810	6970	3446
	19	27	6569	5337	1610	8431	6547	1869	7906	6350	2114	10340	8193	3056	10000	7935	3160	9490	7349	3342	9150	7292	3446
	22	30	7119	5296	1610	9188	6503	1869	8605	6306	2114	11275	8129	3082	10935	7871	3186	10000	7478	3446	9405	7549	3602
	24	32	7505	5296	1626	9712	6503	1885	9071	6306	2131	11955	8129	3082	11530	7871	3212	10340	7607	3524	9575	7742	3706
1.5+2.5+3.5+3.5	12	18	6073	4753	1403	6975	5886	1659	6567	5733	1884	8470	7356	2792	8215	7099	2896	7790	6577	3078	7535	6520	3182
	14	20	6073	4753	1403	7382	5886	1659	6975	5777	1901	8980	7356	2818	8725	7163	2922	8215	6577	3104	7960	6584	3234
	16	22	6073	4962	1419	7790	5886	1676	7324	5777	1919	9490	7356	2844	9235	7163	2974	8725	6577	3156	8470	6584	3260
	18	25	6403	5212	1434	8198	6283	1692	7674	6130	1936	10000	7871	2870	9660	7614	2974	9150	7028	3182	8810	6970	3286
	19	27	6569	5337	1450	8431	6547	1709	7906	6350	1954	10340	8193	2896	10000	7935	3000	9490	7349	3182	9150	7292	3286
	22	30	7119	5296	1450	9188	6503	1709	8605	6306	1954	11275	8129	2922	10935	7871	3026	10000	7478	3286	9405	7549	3442
	24	32	7505	5296	1466	9712	6503	1725	9071	6306	1971	11955	8129	2922	11530	7871	3052	10340	7607	3364	9575	7742	3546
1.5+2.5+3.5+4.2	12	18	6073	4753	1613	6975	5886	1869	6567	5733	2094	8470	7356	3002	8215	7099	3106	7790	6577	3288	7535	6520	3392
	14	20	6073	4753	1613	7382	5886	1869	6975	5777	2111	8980	7356	3028	8725	7163	3132	8215	6577	3314	7960	6584	3444
	16	22	6073	4962	1629	7790	5886	1886	7324	5777	2129	9490	7356	3054	9235	7163	3184	8725	6577	3366	8470	6584	3470
	18	25	6403	5212	1644	8198	6283	1902	7674	6130	2146	10000	7871	3080	9660	7614	3184	9150	7028	3392	8810	6970	3496
	19	27	6569	5337	1660	8431	6547	1919	7906	6350	2164	10340	8193	3106	10000	7935	3210	9490	7349	3392	9150	7292	3496
	22	30	7119	5296	1660	9188	6503	1919	8605	6306	2164	11275	8129	3132	10935	7871	3236	10000	7478	3496	9405	7549	3652
	24	32	7505	5296	1676	9712	6503	1935	9071	6306	2181	11955	8129	3132	11530	7871	3262	10340	7607	3574	9575	7742	3756
1.5+2.5+3.5+5.0	12	18	6073	4753	1803	6975	5886	2059	6567	5733	2284	8470	7356	3192	8215	7099	3296	7790	6577	3478	7535	6520	3582
	14	20	6073	4753	1803	7382	5886	2059	6975	5777	2301	8980	7356	3218	8725	7163	3322	8215	6577	3504	7960	6584	3634
	16	22	6073	4962	1819	7790	5886	2076	7324	5777	2319	9490	7356	3244	9235	7163	3374	8725	6577	3556	8470	6584	3660
	18	25	6403	5212	1834	8198	6283	2092	7674	6130	2336	10000	7871	3270	9660	7614	3374	9150	7028	3582	8810	6970	3686
	19	27	6569	5337	1850	8431	6547	2109	7906	6350	2354	10340	8193	3296	10000	7935	3400	9490	7349	3582	9150	7292	3686
	22	30	7119	5296	1850	9188	6503	2109	8605	6306	2354	11275	8129	3322	10935	7871	3426	10000	7478	3686	9405	7549	3842
	24	32	7505	5296	1866	9712	6503	2125	9071	6306	2371	11955	8129	3322	11530	7871	3452	10340	7607	3764	9575	7742	3946
1.5+2.5+3.5+6.0	12	18	6073	4753	1803	6975	5886	2059	6567	5733	2284	8470	7356	3192	8215	7099	3296	7790	6577	3478	7535	6520	3582
	14	20	6073	4753	1803	7382	5886	2059	6975	5777	2301	8980	7356	3218	8725	7163	3322	8215	6577	3504	7960	6584	3634
	16	22	6073	4962	1819	7790	5886	2076	7324	5777	2319	9490	7356	3244	9235	7163	3374	8725	6577	3556	8470	6584	3660
	18	25	6403	5212	1834	8198	6283	2092	7674	6130	2336	10000	7871	3270	9660	7614	3374	9150	7028	3582	8810	6970	3686
	19	27	6569	5337	1850	8431	6547	2109	7906	6350	2354	10340	8193	3296	10000	7935	3400	9490	7349	3582	9150	7292	3686
	22	30	7119	5296	1850	9188	6503	2109	8605	6306	2354	11275	8129	3322	10935	7871	3426	10000	7478	3686	9405	7549	3842
	24	32	7505	5296	1866	9712	6503	2125	9071	6306	2371	11955	8129	3322	11530	7871	3452	10340	7607	3764	9575	7742	3946

	INDOOR		OUTDOOR TEMPERATURE (°CDB)																				
	EWB	EDB	-10			21			27			32			35			40			43		
	°C	°C	TC	SHC	PI	TC	SHC	PI	TC	SHC	PI	TC	SHC	PI	TC	SHC	PI	TC	SHC	PI	TC	SHC	PI
1.5+2.5+4.2+ 4.2	12	18	6073	4753	1603	6975	5886	1859	6567	5733	2084	8470	7356	2992	8215	7099	3096	7790	6577	3278	7535	6520	3382
	14	20	6073	4753	1603	7382	5886	1859	6975	5777	2101	8980	7356	3018	8725	7163	3122	8215	6577	3304	7960	6584	3434
	16	22	6073	4962	1619	7790	5886	1876	7324	5777	2119	9490	7356	3044	9235	7163	3174	8725	6577	3356	8470	6584	3460
	18	25	6403	5212	1634	8198	6283	1892	7674	6130	2136	10000	7871	3070	9660	7614	3174	9150	7028	3382	8810	6970	3486
	19	27	6569	5337	1650	8431	6547	1909	7906	6350	2154	10340	8193	3096	10000	7935	3200	9490	7349	3382	9150	7292	3486
	22	30	7119	5296	1650	9188	6503	1909	8605	6306	2154	11275	8129	3122	10935	7871	3226	10000	7478	3486	9405	7549	3642
	24	32	7505	5296	1666	9712	6503	1925	9071	6306	2171	11955	8129	3122	11530	7871	3252	10340	7607	3564	9575	7742	3746
1.5+2.5+4.2+ 5.0	12	18	6073	4753	2013	6975	5886	2269	6567	5733	2494	8470	7356	3402	8215	7099	3506	7790	6577	3688	7535	6520	3792
	14	20	6073	4753	2013	7382	5886	2269	6975	5777	2511	8980	7356	3428	8725	7163	3532	8215	6577	3714	7960	6584	3844
	16	22	6073	4962	2029	7790	5886	2286	7324	5777	2529	9490	7356	3454	9235	7163	3584	8725	6577	3766	8470	6584	3870
	18	25	6403	5212	2044	8198	6283	2302	7674	6130	2546	10000	7871	3480	9660	7614	3584	9150	7028	3792	8810	6970	3896
	19	27	6569	5337	2060	8431	6547	2319	7906	6350	2564	10340	8193	3506	10000	7935	3610	9490	7349	3792	9150	7292	3896
	22	30	7119	5296	2060	9188	6503	2319	8605	6306	2564	11275	8129	3532	10935	7871	3636	10000	7478	3896	9405	7549	4052
	24	32	7505	5296	2076	9712	6503	2335	9071	6306	2581	11955	8129	3532	11530	7871	3662	10340	7607	3974	9575	7742	4156
1.5+2.5+4.2+ 6.0	12	18	6073	4753	2123	6975	5886	2379	6567	5733	2604	8470	7356	3512	8215	7099	3616	7790	6577	3798	7535	6520	3902
	14	20	6073	4753	2123	7382	5886	2379	6975	5777	2621	8980	7356	3538	8725	7163	3642	8215	6577	3824	7960	6584	3954
	16	22	6073	4962	2139	7790	5886	2396	7324	5777	2639	9490	7356	3564	9235	7163	3694	8725	6577	3876	8470	6584	3980
	18	25	6403	5212	2154	8198	6283	2412	7674	6130	2656	10000	7871	3590	9660	7614	3694	9150	7028	3902	8810	6970	4006
	19	27	6569	5337	2170	8431	6547	2429	7906	6350	2674	10340	8193	3616	10000	7935	3720	9490	7349	3902	9150	7292	4006
	22	30	7119	5296	2170	9188	6503	2429	8605	6306	2674	11275	8129	3642	10935	7871	3746	10000	7478	4006	9405	7549	4162
	24	32	7505	5296	2186	9712	6503	2445	9071	6306	2691	11955	8129	3642	11530	7871	3772	10340	7607	4084	9575	7742	4266
1.5+2.5+5.0+ 5.0	12	18	6073	4753	2203	6975	5886	2459	6567	5733	2684	8470	7356	3592	8215	7099	3696	7790	6577	3878	7535	6520	3982
	14	20	6073	4753	2203	7382	5886	2459	6975	5777	2701	8980	7356	3618	8725	7163	3722	8215	6577	3904	7960	6584	4034
	16	22	6073	4962	2219	7790	5886	2476	7324	5777	2719	9490	7356	3644	9235	7163	3774	8725	6577	3956	8470	6584	4060
	18	25	6403	5212	2234	8198	6283	2492	7674	6130	2736	10000	7871	3670	9660	7614	3774	9150	7028	3982	8810	6970	4086
	19	27	6569	5337	2250	8431	6547	2509	7906	6350	2754	10340	8193	3696	10000	7935	3800	9490	7349	3982	9150	7292	4086
	22	30	7119	5296	2250	9188	6503	2509	8605	6306	2754	11275	8129	3722	10935	7871	3826	10000	7478	4086	9405	7549	4242
	24	32	7505	5296	2266	9712	6503	2525	9071	6306	2771	11955	8129	3722	11530	7871	3852	10340	7607	4164	9575	7742	4346
1.5+2.5+5.0+ 6.0	12	18	6073	4753	2403	6975	5886	2659	6567	5733	2884	8470	7356	3792	8215	7099	3896	7790	6577	4078	7535	6520	4182
	14	20	6073	4753	2403	7382	5886	2659	6975	5777	2901	8980	7356	3818	8725	7163	3922	8215	6577	4104	7960	6584	4234
	16	22	6073	4962	2419	7790	5886	2676	7324	5777	2919	9490	7356	3844	9235	7163	3974	8725	6577	4156	8470	6584	4260
	18	25	6403	5212	2434	8198	6283	2692	7674	6130	2936	10000	7871	3870	9660	7614	3974	9150	7028	4182	8810	6970	4286
	19	27	6569	5337	2450	8431	6547	2709	7906	6350	2954	10340	8193	3896	10000	7935	4000	9490	7349	4182	9150	7292	4286
	22	30	7119	5296	2450	9188	6503	2709	8605	6306	2954	11275	8129	3922	10935	7871	4026	10000	7478	4286	9405	7549	4442
	24	32	7505	5296	2466	9712	6503	2725	9071	6306	2971	11955	8129	3922	11530	7871	4052	10340	7607	4364	9575	7742	4546
1.5+3.5+3.5+ 3.5	12	18	6073	4753	1753	6975	5886	2009	6567	5733	2234	8470	7356	3142	8215	7099	3246	7790	6577	3428	7535	6520	3532
	14	20	6073	4753	1753	7382	5886	2009	6975	5777	2251	8980	7356	3168	8725	7163	3272	8215	6577	3454	7960	6584	3584
	16	22	6073	4962	1769	7790	5886	2026	7324	5777	2269	9490	7356	3194	9235	7163	3324	8725	6577	3506	8470	6584	3610
	18	25	6403	5212	1784	8198	6283	2042	7674	6130	2286	10000	7871	3220	9660	7614	3324	9150	7028	3532	8810	6970	3636
	19	27	6569	5337	1800	8431	6547	2059	7906	6350	2304	10340	8193	3246	10000	7935	3350	9490	7349	3532	9150	7292	3636
	22	30	7119	5296	1800	9188	6503	2059	8605	6306	2304	11275	8129	3272	10935	7871	3376	10000	7478	3636	9405	7549	3792
	24	32	7505	5296	1816	9712	6503	2075	9071	6306	2321	11955	8129	3272	11530	7871	3402	10340	7607	3714	9575	7742	3896

	INDOOR		OUTDOOR TEMPERATURE (°CDB)																				
	EWB	EDB	-10			21			27			32			35			40			43		
	°C	°C	TC	SHC	PI	TC	SHC	PI	TC	SHC	PI	TC	SHC	PI	TC	SHC	PI	TC	SHC	PI	TC	SHC	PI
1.5+3.5+3.5+4.2	12	18	6073	4753	1753	6975	5886	2009	6567	5733	2234	8470	7356	3142	8215	7099	3246	7790	6577	3428	7535	6520	3532
	14	20	6073	4753	1753	7382	5886	2009	6975	5777	2251	8980	7356	3168	8725	7163	3272	8215	6577	3454	7960	6584	3584
	16	22	6073	4962	1769	7790	5886	2026	7324	5777	2269	9490	7356	3194	9235	7163	3324	8725	6577	3506	8470	6584	3610
	18	25	6403	5212	1784	8198	6283	2042	7674	6130	2286	10000	7871	3220	9660	7614	3324	9150	7028	3532	8810	6970	3636
	19	27	6569	5337	1800	8431	6547	2059	7906	6350	2304	10340	8193	3246	10000	7935	3350	9490	7349	3532	9150	7292	3636
	22	30	7119	5296	1800	9188	6503	2059	8605	6306	2304	11275	8129	3272	10935	7871	3376	10000	7478	3636	9405	7549	3792
	24	32	7505	5296	1816	9712	6503	2075	9071	6306	2321	11955	8129	3272	11530	7871	3402	10340	7607	3714	9575	7742	3896
1.5+3.5+3.5+5.0	12	18	6073	4753	2203	6975	5886	2459	6567	5733	2684	8470	7356	3592	8215	7099	3696	7790	6577	3878	7535	6520	3982
	14	20	6073	4753	2203	7382	5886	2459	6975	5777	2701	8980	7356	3618	8725	7163	3722	8215	6577	3904	7960	6584	4034
	16	22	6073	4962	2219	7790	5886	2476	7324	5777	2719	9490	7356	3644	9235	7163	3774	8725	6577	3956	8470	6584	4060
	18	25	6403	5212	2234	8198	6283	2492	7674	6130	2736	10000	7871	3670	9660	7614	3774	9150	7028	3982	8810	6970	4086
	19	27	6569	5337	2250	8431	6547	2509	7906	6350	2754	10340	8193	3696	10000	7935	3800	9490	7349	3982	9150	7292	4086
	22	30	7119	5296	2250	9188	6503	2509	8605	6306	2754	11275	8129	3722	10935	7871	3826	10000	7478	4086	9405	7549	4242
	24	32	7505	5296	2266	9712	6503	2525	9071	6306	2771	11955	8129	3722	11530	7871	3852	10340	7607	4164	9575	7742	4346
1.5+3.5+3.5+6.0	12	18	6073	4753	2403	6975	5886	2659	6567	5733	2884	8470	7356	3792	8215	7099	3896	7790	6577	4078	7535	6520	4182
	14	20	6073	4753	2403	7382	5886	2659	6975	5777	2901	8980	7356	3818	8725	7163	3922	8215	6577	4104	7960	6584	4234
	16	22	6073	4962	2419	7790	5886	2676	7324	5777	2919	9490	7356	3844	9235	7163	3974	8725	6577	4156	8470	6584	4260
	18	25	6403	5212	2434	8198	6283	2692	7674	6130	2936	10000	7871	3870	9660	7614	3974	9150	7028	4182	8810	6970	4286
	19	27	6569	5337	2450	8431	6547	2709	7906	6350	2954	10340	8193	3896	10000	7935	4000	9490	7349	4182	9150	7292	4286
	22	30	7119	5296	2450	9188	6503	2709	8605	6306	2954	11275	8129	3922	10935	7871	4026	10000	7478	4286	9405	7549	4442
	24	32	7505	5296	2466	9712	6503	2725	9071	6306	2971	11955	8129	3922	11530	7871	4052	10340	7607	4364	9575	7742	4546
1.5+3.5+4.2+4.2	12	18	6073	4753	2403	6975	5886	2659	6567	5733	2884	8470	7356	3792	8215	7099	3896	7790	6577	4078	7535	6520	4182
	14	20	6073	4753	2403	7382	5886	2659	6975	5777	2901	8980	7356	3818	8725	7163	3922	8215	6577	4104	7960	6584	4234
	16	22	6073	4962	2419	7790	5886	2676	7324	5777	2919	9490	7356	3844	9235	7163	3974	8725	6577	4156	8470	6584	4260
	18	25	6403	5212	2434	8198	6283	2692	7674	6130	2936	10000	7871	3870	9660	7614	3974	9150	7028	4182	8810	6970	4286
	19	27	6569	5337	2450	8431	6547	2709	7906	6350	2954	10340	8193	3896	10000	7935	4000	9490	7349	4182	9150	7292	4286
	22	30	7119	5296	2450	9188	6503	2709	8605	6306	2954	11275	8129	3922	10935	7871	4026	10000	7478	4286	9405	7549	4442
	24	32	7505	5296	2466	9712	6503	2725	9071	6306	2971	11955	8129	3922	11530	7871	4052	10340	7607	4364	9575	7742	4546
1.5+3.5+4.2+5.0	12	18	6073	4753	2403	6975	5886	2659	6567	5733	2884	8470	7356	3792	8215	7099	3896	7790	6577	4078	7535	6520	4182
	14	20	6073	4753	2403	7382	5886	2659	6975	5777	2901	8980	7356	3818	8725	7163	3922	8215	6577	4104	7960	6584	4234
	16	22	6073	4962	2419	7790	5886	2676	7324	5777	2919	9490	7356	3844	9235	7163	3974	8725	6577	4156	8470	6584	4260
	18	25	6403	5212	2434	8198	6283	2692	7674	6130	2936	10000	7871	3870	9660	7614	3974	9150	7028	4182	8810	6970	4286
	19	27	6569	5337	2450	8431	6547	2709	7906	6350	2954	10340	8193	3896	10000	7935	4000	9490	7349	4182	9150	7292	4286
	22	30	7119	5296	2450	9188	6503	2709	8605	6306	2954	11275	8129	3922	10935	7871	4026	10000	7478	4286	9405	7549	4442
	24	32	7505	5296	2466	9712	6503	2725	9071	6306	2971	11955	8129	3922	11530	7871	4052	10340	7607	4364	9575	7742	4546
1.5+3.5+4.2+6.0	12	18	6073	4753	2403	6975	5886	2659	6567	5733	2884	8470	7356	3792	8215	7099	3896	7790	6577	4078	7535	6520	4182
	14	20	6073	4753	2403	7382	5886	2659	6975	5777	2901	8980	7356	3818	8725	7163	3922	8215	6577	4104	7960	6584	4234
	16	22	6073	4962	2419	7790	5886	2676	7324	5777	2919	9490	7356	3844	9235	7163	3974	8725	6577	4156	8470	6584	4260
	18	25	6403	5212	2434	8198	6283	2692	7674	6130	2936	10000	7871	3870	9660	7614	3974	9150	7028	4182	8810	6970	4286
	19	27	6569	5337	2450	8431	6547	2709	7906	6350	2954	10340	8193	3896	10000	7935	4000	9490	7349	4182	9150	7292	4286
	22	30	7119	5296	2450	9188	6503	2709	8605	6306	2954	11275	8129	3922	10935	7871	4026	10000	7478	4286	9405	7549	4442
	24	32	7505	5296	2466	9712	6503	2725	9071	6306	2971	11955	8129	3922	11530	7871	4052	10340	7607	4364	9575	7742	4546

	INDOOR		OUTDOOR TEMPERATURE (°CDB)																				
	EWB	EDB	-10			21			27			32			35			40			43		
	°C	°C	TC	SHC	PI	TC	SHC	PI	TC	SHC	PI	TC	SHC	PI	TC	SHC	PI	TC	SHC	PI	TC	SHC	PI
1.5+3.5+5.0+5.0	12	18	6073	4753	2403	6975	5886	2659	6567	5733	2884	8470	7356	3792	8215	7099	3896	7790	6577	4078	7535	6520	4182
	14	20	6073	4753	2403	7382	5886	2659	6975	5777	2901	8980	7356	3818	8725	7163	3922	8215	6577	4104	7960	6584	4234
	16	22	6073	4962	2419	7790	5886	2676	7324	5777	2919	9490	7356	3844	9235	7163	3974	8725	6577	4156	8470	6584	4260
	18	25	6403	5212	2434	8198	6283	2692	7674	6130	2936	10000	7871	3870	9660	7614	3974	9150	7028	4182	8810	6970	4286
	19	27	6569	5337	2450	8431	6547	2709	7906	6350	2954	10340	8193	3896	10000	7935	4000	9490	7349	4182	9150	7292	4286
	22	30	7119	5296	2450	9188	6503	2709	8605	6306	2954	11275	8129	3922	10935	7871	4026	10000	7478	4286	9405	7549	4442
	24	32	7505	5296	2466	9712	6503	2725	9071	6306	2971	11955	8129	3922	11530	7871	4052	10340	7607	4364	9575	7742	4546
1.5+3.5+5.0+6.0	12	18	6073	4753	2403	6975	5886	2659	6567	5733	2884	8470	7356	3792	8215	7099	3896	7790	6577	4078	7535	6520	4182
	14	20	6073	4753	2403	7382	5886	2659	6975	5777	2901	8980	7356	3818	8725	7163	3922	8215	6577	4104	7960	6584	4234
	16	22	6073	4962	2419	7790	5886	2676	7324	5777	2919	9490	7356	3844	9235	7163	3974	8725	6577	4156	8470	6584	4260
	18	25	6403	5212	2434	8198	6283	2692	7674	6130	2936	10000	7871	3870	9660	7614	3974	9150	7028	4182	8810	6970	4286
	19	27	6569	5337	2450	8431	6547	2709	7906	6350	2954	10340	8193	3896	10000	7935	4000	9490	7349	4182	9150	7292	4286
	22	30	7119	5296	2450	9188	6503	2709	8605	6306	2954	11275	8129	3922	10935	7871	4026	10000	7478	4286	9405	7549	4442
	24	32	7505	5296	2466	9712	6503	2725	9071	6306	2971	11955	8129	3922	11530	7871	4052	10340	7607	4364	9575	7742	4546
1.5+4.2+4.2+4.2	12	18	6073	4753	2203	6975	5886	2459	6567	5733	2684	8470	7356	3592	8215	7099	3696	7790	6577	3878	7535	6520	3982
	14	20	6073	4753	2203	7382	5886	2459	6975	5777	2701	8980	7356	3618	8725	7163	3722	8215	6577	3904	7960	6584	4034
	16	22	6073	4962	2219	7790	5886	2476	7324	5777	2719	9490	7356	3644	9235	7163	3774	8725	6577	3956	8470	6584	4060
	18	25	6403	5212	2234	8198	6283	2492	7674	6130	2736	10000	7871	3670	9660	7614	3774	9150	7028	3982	8810	6970	4086
	19	27	6569	5337	2250	8431	6547	2509	7906	6350	2754	10340	8193	3696	10000	7935	3800	9490	7349	3982	9150	7292	4086
	22	30	7119	5296	2250	9188	6503	2509	8605	6306	2754	11275	8129	3722	10935	7871	3826	10000	7478	4086	9405	7549	4242
	24	32	7505	5296	2266	9712	6503	2525	9071	6306	2771	11955	8129	3722	11530	7871	3852	10340	7607	4164	9575	7742	4346
1.5+4.2+4.2+5.0	12	18	6073	4753	2403	6975	5886	2659	6567	5733	2884	8470	7356	3792	8215	7099	3896	7790	6577	4078	7535	6520	4182
	14	20	6073	4753	2403	7382	5886	2659	6975	5777	2901	8980	7356	3818	8725	7163	3922	8215	6577	4104	7960	6584	4234
	16	22	6073	4962	2419	7790	5886	2676	7324	5777	2919	9490	7356	3844	9235	7163	3974	8725	6577	4156	8470	6584	4260
	18	25	6403	5212	2434	8198	6283	2692	7674	6130	2936	10000	7871	3870	9660	7614	3974	9150	7028	4182	8810	6970	4286
	19	27	6569	5337	2450	8431	6547	2709	7906	6350	2954	10340	8193	3896	10000	7935	4000	9490	7349	4182	9150	7292	4286
	22	30	7119	5296	2450	9188	6503	2709	8605	6306	2954	11275	8129	3922	10935	7871	4026	10000	7478	4286	9405	7549	4442
	24	32	7505	5296	2466	9712	6503	2725	9071	6306	2971	11955	8129	3922	11530	7871	4052	10340	7607	4364	9575	7742	4546
1.5+4.2+4.2+6.0	12	18	6073	4753	2403	6975	5886	2659	6567	5733	2884	8470	7356	3792	8215	7099	3896	7790	6577	4078	7535	6520	4182
	14	20	6073	4753	2403	7382	5886	2659	6975	5777	2901	8980	7356	3818	8725	7163	3922	8215	6577	4104	7960	6584	4234
	16	22	6073	4962	2419	7790	5886	2676	7324	5777	2919	9490	7356	3844	9235	7163	3974	8725	6577	4156	8470	6584	4260
	18	25	6403	5212	2434	8198	6283	2692	7674	6130	2936	10000	7871	3870	9660	7614	3974	9150	7028	4182	8810	6970	4286
	19	27	6569	5337	2450	8431	6547	2709	7906	6350	2954	10340	8193	3896	10000	7935	4000	9490	7349	4182	9150	7292	4286
	22	30	7119	5296	2450	9188	6503	2709	8605	6306	2954	11275	8129	3922	10935	7871	4026	10000	7478	4286	9405	7549	4442
	24	32	7505	5296	2466	9712	6503	2725	9071	6306	2971	11955	8129	3922	11530	7871	4052	10340	7607	4364	9575	7742	4546
1.5+4.2+5.0+6.0	12	18	6073	4753	2403	6975	5886	2659	6567	5733	2884	8470	7356	3792	8215	7099	3896	7790	6577	4078	7535	6520	4182
	14	20	6073	4753	2403	7382	5886	2659	6975	5777	2901	8980	7356	3818	8725	7163	3922	8215	6577	4104	7960	6584	4234
	16	22	6073	4962	2419	7790	5886	2676	7324	5777	2919	9490	7356	3844	9235	7163	3974	8725	6577	4156	8470	6584	4260
	18	25	6403	5212	2434	8198	6283	2692	7674	6130	2936	10000	7871	3870	9660	7614	3974	9150	7028	4182	8810	6970	4286
	19	27	6569	5337	2450	8431	6547	2709	7906	6350	2954	10340	8193	3896	10000	7935	4000	9490	7349	4182	9150	7292	4286
	22	30	7119	5296	2450	9188	6503	2709	8605	6306	2954	11275	8129	3922	10935	7871	4026	10000	7478	4286	9405	7549	4442
	24	32	7505	5296	2466	9712	6503	2725	9071	6306	2971	11955	8129	3922	11530	7871	4052	10340	7607	4364	9575	7742	4546
1.8+1.8+1.8+1.8	12	18	3873	2756	899	4637	3885	1128	4292	3586	1330	5904	4961	2144	5688	4743	2237	5328	4470	2400	5112	4252	2493
	14	20	3873	2756	899	4983	3885	1128	4637	3623	1346	6336	4961	2167	6120	4797	2260	5688	4470	2423	5472	4306	2540
	16	22	3873	2933	913	5328	3885	1143	4933	3623	1361	6768	4961	2190	6552	4797	2307	6120	4470	2470	5904	4306	2563
	18	25	4153	3145	927	5673	4221	1158	5229	3922	1377	7200	5397	2214	6912	5179	2307	6480	4852	2493	6192	4634	2586
	19	27	4293	3251	941	5871	4445	1173	5427	4109	1392	7488	5669	2237	7200	5451	2330	6768	5124	2493	6480	4906	2586
	22	30	4760	3215	941	6512	4407	1173	6019	4071	1392	8280	5615	2260	7992	5397	2353	7200	5233	2586	6696	5124	2726
	24	32	5087	3215	955	6956	4407	1188	6413	4071	1408	8856	5615	2260	8496	5397	2377	7488	5342	2656	6840	5288	2819
1.8+1.8+1.8+2.5	12	18	4250	3024	918	5088	4262	1153	4709	3934	1358	6478	5443	2190	6241	5204	2285	5846	4905	2451	5609	4665	2547
	14	20	4250	3024	918	5467	4262	1153	5088	3975	1374	6952	5443	2213	6715	5263	2309	6241	4905	2475	6004	4725	2594
	16	22	4250	3218	932	5846	4262	1168	5413	3975	1390	7426	5443	2237	7189	5263	2356	6715	4905	2523	6478	4725	2618
	18	25	4557	3450	947	6225	4631	1183	5738	4303	1406	7900	5921	2261	7584	5682	2356	7110	5323	2547	6794	5084	2642
	19	27	4711	3567	961	6441	4877	1198	5954	4508	1422	8216	6220	2285	7900	5981	2380	7426	5622	2547	7110	5383	2642
	22	30	5223	3528	961	7145	4836	1198	6604	4467	1422	9085	6161	2309	8769	5921	2404	7900	5742	2642	7347	5622	2785
	24	32	5581	3528	976	7632	4836	1213	7037	4467	1438	9717	6161	2309	9322	5921	2428	8216	5862	2713	7505	5802	2880
1.8+1.8+1.8+3.5	12	18	4973	3653	1015	5875	4986	1274	5467	4633	1501	7370	6256	2420	7115	5999	2525	6690	5677	2709	6435	5420	2814
	14	20	4973	3653	1015	6282	4986	1274	5875	4677	1519	7880	6256	2446	7625	6063	2551	7115	5677	2735	6860	5484	2867
	16	22	4973	3862	1030	6690	4986	1290	6224	4677	1536	8390	6256	2472	8135	6063	2604	7625	5677	2788	7370	5484	2893
	18	25	5303	4112	1046	7098	5383	1307	6574	5030	1554	8900	6771	2499	8560	6514	2604	8050	6128	2814	7710	5870	2919
	19	27	5469	4237	1062	7331	5647	1324	6806	5250	1572	9240	7093	2525	8900	6835	2630	8390	6449	2814	8050	6192	2919
	22	30	6019	4196	1062	8088	5603	1324	7505	5206	1572	10175	7029	2551	9835	6771	2656	8900	6578	2919	8305	6449	3077
	24	32	6405	4196	1078	8612	5603	1341	7971	5206	1589	10855	7029	2551	10430	6771	2683	9240	6707	2998	8475	6642	3182

	INDOOR		OUTDOOR TEMPERATURE (°CDB)																				
	EWB	EDB	-10			21			27			32			35			40			43		
	°C	°C	TC	SHC	PI	TC	SHC	PI	TC	SHC	PI	TC	SHC	PI	TC	SHC	PI	TC	SHC	PI	TC	SHC	PI
1.8+1.8+1.8+4.2	12	18	5673	4353	1018	6575	5486	1279	6167	5333	1507	8070	6956	2429	7815	6699	2534	7390	6177	2719	7135	6120	2825
	14	20	5673	4353	1018	6982	5486	1279	6575	5377	1525	8580	6956	2455	8325	6763	2561	7815	6177	2746	7560	6184	2878
	16	22	5673	4562	1034	7390	5486	1295	6924	5377	1542	9090	6956	2482	8835	6763	2614	8325	6177	2798	8070	6184	2904
	18	25	6003	4812	1050	7798	5883	1312	7274	5730	1560	9600	7471	2508	9260	7214	2614	8750	6628	2825	8410	6570	2930
	19	27	6169	4937	1066	8031	6147	1329	7506	5950	1578	9940	7793	2534	9600	7535	2640	9090	6949	2825	8750	6892	2930
	22	30	6719	4896	1066	8788	6103	1329	8205	5906	1578	10875	7729	2561	10535	7471	2666	9600	7078	2930	9005	7149	3089
	24	32	7105	4896	1082	9312	6103	1346	8671	5906	1595	11555	7729	2561	11130	7471	2693	9940	7207	3010	9175	7342	3194
1.8+1.8+1.8+5.0	12	18	6073	4753	1303	6975	5886	1559	6567	5733	1784	8470	7356	2692	8215	7099	2796	7790	6577	2978	7535	6520	3082
	14	20	6073	4753	1303	7382	5886	1559	6975	5777	1801	8980	7356	2718	8725	7163	2822	8215	6577	3004	7960	6584	3134
	16	22	6073	4962	1319	7790	5886	1576	7324	5777	1819	9490	7356	2744	9235	7163	2874	8725	6577	3056	8470	6584	3160
	18	25	6403	5212	1334	8198	6283	1592	7674	6130	1836	10000	7871	2770	9660	7614	2874	9150	7028	3082	8810	6970	3186
	19	27	6569	5337	1350	8431	6547	1609	7906	6350	1854	10340	8193	2796	10000	7935	2900	9490	7349	3082	9150	7292	3186
	22	30	7119	5296	1350	9188	6503	1609	8605	6306	1854	11275	8129	2822	10935	7871	2926	10000	7478	3186	9405	7549	3342
	24	32	7505	5296	1366	9712	6503	1625	9071	6306	1871	11955	8129	2822	11530	7871	2952	10340	7607	3264	9575	7742	3446
1.8+1.8+1.8+6.0	12	18	6073	4753	1403	6975	5886	1659	6567	5733	1884	8470	7356	2792	8215	7099	2896	7790	6577	3078	7535	6520	3182
	14	20	6073	4753	1403	7382	5886	1659	6975	5777	1901	8980	7356	2818	8725	7163	2922	8215	6577	3104	7960	6584	3234
	16	22	6073	4962	1419	7790	5886	1676	7324	5777	1919	9490	7356	2844	9235	7163	2974	8725	6577	3156	8470	6584	3260
	18	25	6403	5212	1434	8198	6283	1692	7674	6130	1936	10000	7871	2870	9660	7614	2974	9150	7028	3182	8810	6970	3286
	19	27	6569	5337	1450	8431	6547	1709	7906	6350	1954	10340	8193	2896	10000	7935	3000	9490	7349	3182	9150	7292	3286
	22	30	7119	5296	1450	9188	6503	1709	8605	6306	1954	11275	8129	2922	10935	7871	3026	10000	7478	3286	9405	7549	3442
	24	32	7505	5296	1466	9712	6503	1725	9071	6306	1971	11955	8129	2922	11530	7871	3052	10340	7607	3364	9575	7742	3546
1.8+1.8+2.5+2.5	12	18	4573	3253	1038	5475	4586	1303	5067	4233	1535	6970	5856	2475	6715	5599	2582	6290	5277	2771	6035	5020	2878
	14	20	4573	3253	1038	5882	4586	1303	5475	4277	1553	7480	5856	2502	7225	5663	2609	6715	5277	2798	6460	5084	2932
	16	22	4573	3462	1054	6290	4586	1320	5824	4277	1571	7990	5856	2529	7735	5663	2663	7225	5277	2851	6970	5084	2959
	18	25	4903	3712	1070	6698	4983	1337	6174	4630	1590	8500	6371	2556	8160	6114	2663	7650	5728	2878	7310	5470	2986
	19	27	5069	3837	1086	6931	5247	1354	6406	4850	1608	8840	6693	2582	8500	6435	2690	7990	6049	2878	7650	5792	2986
	22	30	5619	3796	1086	7688	5203	1354	7105	4806	1608	9775	6629	2609	9435	6371	2717	8500	6178	2986	7905	6049	3147
	24	32	6005	3796	1103	8212	5203	1371	7571	4806	1626	10455	6629	2609	10030	6371	2744	8840	6307	3067	8075	6242	3255
1.8+1.8+2.5+3.5	12	18	5673	4353	1068	6575	5486	1329	6167	5333	1557	8070	6956	2479	7815	6699	2584	7390	6177	2769	7135	6120	2875
	14	20	5673	4353	1068	6982	5486	1329	6575	5377	1575	8580	6956	2505	8325	6763	2611	7815	6177	2796	7560	6184	2928
	16	22	5673	4562	1084	7390	5486	1345	6924	5377	1592	9090	6956	2532	8835	6763	2664	8325	6177	2848	8070	6184	2954
	18	25	6003	4812	1100	7798	5883	1362	7274	5730	1610	9600	7471	2558	9260	7214	2664	8750	6628	2875	8410	6570	2980
	19	27	6169	4937	1116	8031	6147	1379	7506	5950	1628	9940	7793	2584	9600	7535	2690	9090	6949	2875	8750	6892	2980
	22	30	6719	4896	1116	8788	6103	1379	8205	5906	1628	10875	7729	2611	10535	7471	2716	9600	7078	2980	9005	7149	3139
	24	32	7105	4896	1132	9312	6103	1396	8671	5906	1645	11555	7729	2611	11130	7471	2743	9940	7207	3060	9175	7342	3244
1.8+1.8+2.5+4.2	12	18	6073	4753	1253	6975	5886	1509	6567	5733	1734	8470	7356	2642	8215	7099	2746	7790	6577	2928	7535	6520	3032
	14	20	6073	4753	1253	7382	5886	1509	6975	5777	1751	8980	7356	2668	8725	7163	2772	8215	6577	2954	7960	6584	3084
	16	22	6073	4962	1269	7790	5886	1526	7324	5777	1769	9490	7356	2694	9235	7163	2824	8725	6577	3006	8470	6584	3110
	18	25	6403	5212	1284	8198	6283	1542	7674	6130	1786	10000	7871	2720	9660	7614	2824	9150	7028	3032	8810	6970	3136
	19	27	6569	5337	1300	8431	6547	1559	7906	6350	1804	10340	8193	2746	10000	7935	2850	9490	7349	3032	9150	7292	3136
	22	30	7119	5296	1300	9188	6503	1559	8605	6306	1804	11275	8129	2772	10935	7871	2876	10000	7478	3136	9405	7549	3292
	24	32	7505	5296	1316	9712	6503	1575	9071	6306	1821	11955	8129	2772	11530	7871	2902	10340	7607	3214	9575	7742	3396

	INDOOR		OUTDOOR TEMPERATURE (°CDB)																				
	EWB	EDB	-10			21			27			32			35			40			43		
	°C	°C	TC	SHC	PI	TC	SHC	PI	TC	SHC	PI	TC	SHC	PI	TC	SHC	PI	TC	SHC	PI	TC	SHC	PI
1.8+1.8+2.5+5.0	12	18	6073	4753	1403	6975	5886	1659	6567	5733	1884	8470	7356	2792	8215	7099	2896	7790	6577	3078	7535	6520	3182
	14	20	6073	4753	1403	7382	5886	1659	6975	5777	1901	8980	7356	2818	8725	7163	2922	8215	6577	3104	7960	6584	3234
	16	22	6073	4962	1419	7790	5886	1676	7324	5777	1919	9490	7356	2844	9235	7163	2974	8725	6577	3156	8470	6584	3260
	18	25	6403	5212	1434	8198	6283	1692	7674	6130	1936	10000	7871	2870	9660	7614	2974	9150	7028	3182	8810	6970	3286
	19	27	6569	5337	1450	8431	6547	1709	7906	6350	1954	10340	8193	2896	10000	7935	3000	9490	7349	3182	9150	7292	3286
	22	30	7119	5296	1450	9188	6503	1709	8605	6306	1954	11275	8129	2922	10935	7871	3026	10000	7478	3286	9405	7549	3442
	24	32	7505	5296	1466	9712	6503	1725	9071	6306	1971	11955	8129	2922	11530	7871	3052	10340	7607	3364	9575	7742	3546
1.8+1.8+2.5+6.0	12	18	6073	4753	1403	6975	5886	1659	6567	5733	1884	8470	7356	2792	8215	7099	2896	7790	6577	3078	7535	6520	3182
	14	20	6073	4753	1403	7382	5886	1659	6975	5777	1901	8980	7356	2818	8725	7163	2922	8215	6577	3104	7960	6584	3234
	16	22	6073	4962	1419	7790	5886	1676	7324	5777	1919	9490	7356	2844	9235	7163	2974	8725	6577	3156	8470	6584	3260
	18	25	6403	5212	1434	8198	6283	1692	7674	6130	1936	10000	7871	2870	9660	7614	2974	9150	7028	3182	8810	6970	3286
	19	27	6569	5337	1450	8431	6547	1709	7906	6350	1954	10340	8193	2896	10000	7935	3000	9490	7349	3182	9150	7292	3286
	22	30	7119	5296	1450	9188	6503	1709	8605	6306	1954	11275	8129	2922	10935	7871	3026	10000	7478	3286	9405	7549	3442
	24	32	7505	5296	1466	9712	6503	1725	9071	6306	1971	11955	8129	2922	11530	7871	3052	10340	7607	3364	9575	7742	3546
1.8+1.8+3.5+3.5	12	18	6073	4753	1303	6975	5886	1559	6567	5733	1784	8470	7356	2692	8215	7099	2796	7790	6577	2978	7535	6520	3082
	14	20	6073	4753	1303	7382	5886	1559	6975	5777	1801	8980	7356	2718	8725	7163	2822	8215	6577	3004	7960	6584	3134
	16	22	6073	4962	1319	7790	5886	1576	7324	5777	1819	9490	7356	2744	9235	7163	2874	8725	6577	3056	8470	6584	3160
	18	25	6403	5212	1334	8198	6283	1592	7674	6130	1836	10000	7871	2770	9660	7614	2874	9150	7028	3082	8810	6970	3186
	19	27	6569	5337	1350	8431	6547	1609	7906	6350	1854	10340	8193	2796	10000	7935	2900	9490	7349	3082	9150	7292	3186
	22	30	7119	5296	1350	9188	6503	1609	8605	6306	1854	11275	8129	2822	10935	7871	2926	10000	7478	3186	9405	7549	3342
	24	32	7505	5296	1366	9712	6503	1625	9071	6306	1871	11955	8129	2822	11530	7871	2952	10340	7607	3264	9575	7742	3446
1.8+1.8+3.5+4.2	12	18	6073	4753	1403	6975	5886	1659	6567	5733	1884	8470	7356	2792	8215	7099	2896	7790	6577	3078	7535	6520	3182
	14	20	6073	4753	1403	7382	5886	1659	6975	5777	1901	8980	7356	2818	8725	7163	2922	8215	6577	3104	7960	6584	3234
	16	22	6073	4962	1419	7790	5886	1676	7324	5777	1919	9490	7356	2844	9235	7163	2974	8725	6577	3156	8470	6584	3260
	18	25	6403	5212	1434	8198	6283	1692	7674	6130	1936	10000	7871	2870	9660	7614	2974	9150	7028	3182	8810	6970	3286
	19	27	6569	5337	1450	8431	6547	1709	7906	6350	1954	10340	8193	2896	10000	7935	3000	9490	7349	3182	9150	7292	3286
	22	30	7119	5296	1450	9188	6503	1709	8605	6306	1954	11275	8129	2922	10935	7871	3026	10000	7478	3286	9405	7549	3442
	24	32	7505	5296	1466	9712	6503	1725	9071	6306	1971	11955	8129	2922	11530	7871	3052	10340	7607	3364	9575	7742	3546
1.8+1.8+3.5+5.0	12	18	6073	4753	1603	6975	5886	1859	6567	5733	2084	8470	7356	2992	8215	7099	3096	7790	6577	3278	7535	6520	3382
	14	20	6073	4753	1603	7382	5886	1859	6975	5777	2101	8980	7356	3018	8725	7163	3122	8215	6577	3304	7960	6584	3434
	16	22	6073	4962	1619	7790	5886	1876	7324	5777	2119	9490	7356	3044	9235	7163	3174	8725	6577	3356	8470	6584	3460
	18	25	6403	5212	1634	8198	6283	1892	7674	6130	2136	10000	7871	3070	9660	7614	3174	9150	7028	3382	8810	6970	3486
	19	27	6569	5337	1650	8431	6547	1909	7906	6350	2154	10340	8193	3096	10000	7935	3200	9490	7349	3382	9150	7292	3486
	22	30	7119	5296	1650	9188	6503	1909	8605	6306	2154	11275	8129	3122	10935	7871	3226	10000	7478	3486	9405	7549	3642
	24	32	7505	5296	1666	9712	6503	1925	9071	6306	2171	11955	8129	3122	11530	7871	3252	10340	7607	3564	9575	7742	3746
1.8+1.8+3.5+6.0	12	18	6073	4753	1603	6975	5886	1859	6567	5733	2084	8470	7356	2992	8215	7099	3096	7790	6577	3278	7535	6520	3382
	14	20	6073	4753	1603	7382	5886	1859	6975	5777	2101	8980	7356	3018	8725	7163	3122	8215	6577	3304	7960	6584	3434
	16	22	6073	4962	1619	7790	5886	1876	7324	5777	2119	9490	7356	3044	9235	7163	3174	8725	6577	3356	8470	6584	3460
	18	25	6403	5212	1634	8198	6283	1892	7674	6130	2136	10000	7871	3070	9660	7614	3174	9150	7028	3382	8810	6970	3486
	19	27	6569	5337	1650	8431	6547	1909	7906	6350	2154	10340	8193	3096	10000	7935	3200	9490	7349	3382	9150	7292	3486
	22	30	7119	5296	1650	9188	6503	1909	8605	6306	2154	11275	8129	3122	10935	7871	3226	10000	7478	3486	9405	7549	3642
	24	32	7505	5296	1666	9712	6503	1925	9071	6306	2171	11955	8129	3122	11530	7871	3252	10340	7607	3564	9575	7742	3746

	INDOOR		OUTDOOR TEMPERATURE (°CDB)																				
	EWB	EDB	-10			21			27			32			35			40			43		
	°C	°C	TC	SHC	PI	TC	SHC	PI	TC	SHC	PI	TC	SHC	PI	TC	SHC	PI	TC	SHC	PI	TC	SHC	PI
1.8+1.8+4.2+4.2	12	18	6073	4753	1603	6975	5886	1859	6567	5733	2084	8470	7356	2992	8215	7099	3096	7790	6577	3278	7535	6520	3382
	14	20	6073	4753	1603	7382	5886	1859	6975	5777	2101	8980	7356	3018	8725	7163	3122	8215	6577	3304	7960	6584	3434
	16	22	6073	4962	1619	7790	5886	1876	7324	5777	2119	9490	7356	3044	9235	7163	3174	8725	6577	3356	8470	6584	3460
	18	25	6403	5212	1634	8198	6283	1892	7674	6130	2136	10000	7871	3070	9660	7614	3174	9150	7028	3382	8810	6970	3486
	19	27	6569	5337	1650	8431	6547	1909	7906	6350	2154	10340	8193	3096	10000	7935	3200	9490	7349	3382	9150	7292	3486
	22	30	7119	5296	1650	9188	6503	1909	8605	6306	2154	11275	8129	3122	10935	7871	3226	10000	7478	3486	9405	7549	3642
	24	32	7505	5296	1666	9712	6503	1925	9071	6306	2171	11955	8129	3122	11530	7871	3252	10340	7607	3564	9575	7742	3746
1.8+1.8+4.2+5.0	12	18	6073	4753	1903	6975	5886	2159	6567	5733	2384	8470	7356	3292	8215	7099	3396	7790	6577	3578	7535	6520	3682
	14	20	6073	4753	1903	7382	5886	2159	6975	5777	2401	8980	7356	3318	8725	7163	3422	8215	6577	3604	7960	6584	3734
	16	22	6073	4962	1919	7790	5886	2176	7324	5777	2419	9490	7356	3344	9235	7163	3474	8725	6577	3656	8470	6584	3760
	18	25	6403	5212	1934	8198	6283	2192	7674	6130	2436	10000	7871	3370	9660	7614	3474	9150	7028	3682	8810	6970	3786
	19	27	6569	5337	1950	8431	6547	2209	7906	6350	2454	10340	8193	3396	10000	7935	3500	9490	7349	3682	9150	7292	3786
	22	30	7119	5296	1950	9188	6503	2209	8605	6306	2454	11275	8129	3422	10935	7871	3526	10000	7478	3786	9405	7549	3942
	24	32	7505	5296	1966	9712	6503	2225	9071	6306	2471	11955	8129	3422	11530	7871	3552	10340	7607	3864	9575	7742	4046
1.8+1.8+4.2+6.0	12	18	6073	4753	1903	6975	5886	2159	6567	5733	2384	8470	7356	3292	8215	7099	3396	7790	6577	3578	7535	6520	3682
	14	20	6073	4753	1903	7382	5886	2159	6975	5777	2401	8980	7356	3318	8725	7163	3422	8215	6577	3604	7960	6584	3734
	16	22	6073	4962	1919	7790	5886	2176	7324	5777	2419	9490	7356	3344	9235	7163	3474	8725	6577	3656	8470	6584	3760
	18	25	6403	5212	1934	8198	6283	2192	7674	6130	2436	10000	7871	3370	9660	7614	3474	9150	7028	3682	8810	6970	3786
	19	27	6569	5337	1950	8431	6547	2209	7906	6350	2454	10340	8193	3396	10000	7935	3500	9490	7349	3682	9150	7292	3786
	22	30	7119	5296	1950	9188	6503	2209	8605	6306	2454	11275	8129	3422	10935	7871	3526	10000	7478	3786	9405	7549	3942
	24	32	7505	5296	1966	9712	6503	2225	9071	6306	2471	11955	8129	3422	11530	7871	3552	10340	7607	3864	9575	7742	4046
1.8+1.8+5.0+5.0	12	18	6073	4753	2083	6975	5886	2339	6567	5733	2564	8470	7356	3472	8215	7099	3576	7790	6577	3758	7535	6520	3862
	14	20	6073	4753	2083	7382	5886	2339	6975	5777	2581	8980	7356	3498	8725	7163	3602	8215	6577	3784	7960	6584	3914
	16	22	6073	4962	2099	7790	5886	2356	7324	5777	2599	9490	7356	3524	9235	7163	3654	8725	6577	3836	8470	6584	3940
	18	25	6403	5212	2114	8198	6283	2372	7674	6130	2616	10000	7871	3550	9660	7614	3654	9150	7028	3862	8810	6970	3966
	19	27	6569	5337	2130	8431	6547	2389	7906	6350	2634	10340	8193	3576	10000	7935	3680	9490	7349	3862	9150	7292	3966
	22	30	7119	5296	2130	9188	6503	2389	8605	6306	2634	11275	8129	3602	10935	7871	3706	10000	7478	3966	9405	7549	4122
	24	32	7505	5296	2146	9712	6503	2405	9071	6306	2651	11955	8129	3602	11530	7871	3732	10340	7607	4044	9575	7742	4226
1.8+1.8+5.0+6.0	12	18	6073	4753	2083	6975	5886	2339	6567	5733	2564	8470	7356	3472	8215	7099	3576	7790	6577	3758	7535	6520	3862
	14	20	6073	4753	2083	7382	5886	2339	6975	5777	2581	8980	7356	3498	8725	7163	3602	8215	6577	3784	7960	6584	3914
	16	22	6073	4962	2099	7790	5886	2356	7324	5777	2599	9490	7356	3524	9235	7163	3654	8725	6577	3836	8470	6584	3940
	18	25	6403	5212	2114	8198	6283	2372	7674	6130	2616	10000	7871	3550	9660	7614	3654	9150	7028	3862	8810	6970	3966
	19	27	6569	5337	2130	8431	6547	2389	7906	6350	2634	10340	8193	3576	10000	7935	3680	9490	7349	3862	9150	7292	3966
	22	30	7119	5296	2130	9188	6503	2389	8605	6306	2634	11275	8129	3602	10935	7871	3706	10000	7478	3966	9405	7549	4122
	24	32	7505	5296	2146	9712	6503	2405	9071	6306	2651	11955	8129	3602	11530	7871	3732	10340	7607	4044	9575	7742	4226
1.8+1.8+6.0+6.0	12	18	6073	4753	2183	6975	5886	2439	6567	5733	2664	8470	7356	3572	8215	7099	3676	7790	6577	3858	7535	6520	3962
	14	20	6073	4753	2183	7382	5886	2439	6975	5777	2681	8980	7356	3598	8725	7163	3702	8215	6577	3884	7960	6584	4014
	16	22	6073	4962	2199	7790	5886	2456	7324	5777	2699	9490	7356	3624	9235	7163	3754	8725	6577	3936	8470	6584	4040
	18	25	6403	5212	2214	8198	6283	2472	7674	6130	2716	10000	7871	3650	9660	7614	3754	9150	7028	3962	8810	6970	4066
	19	27	6569	5337	2230	8431	6547	2489	7906	6350	2734	10340	8193	3676	10000	7935	3780	9490	7349	3962	9150	7292	4066
	22	30	7119	5296	2230	9188	6503	2489	8605	6306	2734	11275	8129	3702	10935	7871	3806	10000	7478	4066	9405	7549	4222
	24	32	7505	5296	2246	9712	6503	2505	9071	6306	2751	11955	8129	3702	11530	7871	3832	10340	7607	4144	9575	7742	4326
1.8+2.5+2.5+2.5	12	18	4965	3677	1217	5846	4978	1387	5948	5134	1424	7806	6718	2381	7557	6467	2490	7142	6153	2682	6893	5902	2792
	14	20	4965	3677	1217	6244	4978	1387	6346	5177	1442	8304	6718	2408	8055	6530	2518	7557	6153	2710	7308	5964	2847
	16	22	4965	3881	1234	6642	4978	1404	6687	5177	1461	8802	6718	2436	8553	6530	2573	8055	6153	2764	7806	5964	2874
	18	25	5288	4125	1250	7040	5365	1422	7028	5521	1479	9300	7221	2463	8968	6970	2573	8470	6593	2792	8138	6341	2901
	19	27	5449	4247	1267	7268	5624	1439	7256	5736	1497	9632	7535	2490	9300	7284	2600	8802	6907	2792	8470	6656	2901
	22	30	5987	4206	1267	8007	5581	1439	7938	5693	1497	10545	7473	2518	10213	7221	2627	9300	7033	2901	8719	6907	3066
	24	32	6364	4206	1283	8519	5581	1457	8393	5693	1516	11209	7473	2518	10794	7221	2655	9632	7158	2984	8885	7096	3175

	INDOOR		OUTDOOR TEMPERATURE (°CDB)																				
	EWB	EDB	-10			21			27			32			35			40			43		
	°C	°C	TC	SHC	PI	TC	SHC	PI	TC	SHC	PI	TC	SHC	PI	TC	SHC	PI	TC	SHC	PI	TC	SHC	PI
1.8+2.5+2.5+3.5	12	18	6073	4753	1143	6975	5886	1399	6567	5733	1624	8470	7356	2532	8215	7099	2636	7790	6577	2818	7535	6520	2922
	14	20	6073	4753	1143	7382	5886	1399	6975	5777	1641	8980	7356	2558	8725	7163	2662	8215	6577	2844	7960	6584	2974
	16	22	6073	4962	1159	7790	5886	1416	7324	5777	1659	9490	7356	2584	9235	7163	2714	8725	6577	2896	8470	6584	3000
	18	25	6403	5212	1174	8198	6283	1432	7674	6130	1676	10000	7871	2610	9660	7614	2714	9150	7028	2922	8810	6970	3026
	19	27	6569	5337	1190	8431	6547	1449	7906	6350	1694	10340	8193	2636	10000	7935	2740	9490	7349	2922	9150	7292	3026
	22	30	7119	5296	1190	9188	6503	1449	8605	6306	1694	11275	8129	2662	10935	7871	2766	10000	7478	3026	9405	7549	3182
	24	32	7505	5296	1206	9712	6503	1465	9071	6306	1711	11955	8129	2662	11530	7871	2792	10340	7607	3104	9575	7742	3286
1.8+2.5+2.5+4.2	12	18	6073	4753	1303	6975	5886	1559	6567	5733	1784	8470	7356	2692	8215	7099	2796	7790	6577	2978	7535	6520	3082
	14	20	6073	4753	1303	7382	5886	1559	6975	5777	1801	8980	7356	2718	8725	7163	2822	8215	6577	3004	7960	6584	3134
	16	22	6073	4962	1319	7790	5886	1576	7324	5777	1819	9490	7356	2744	9235	7163	2874	8725	6577	3056	8470	6584	3160
	18	25	6403	5212	1334	8198	6283	1592	7674	6130	1836	10000	7871	2770	9660	7614	2874	9150	7028	3082	8810	6970	3186
	19	27	6569	5337	1350	8431	6547	1609	7906	6350	1854	10340	8193	2796	10000	7935	2900	9490	7349	3082	9150	7292	3186
	22	30	7119	5296	1350	9188	6503	1609	8605	6306	1854	11275	8129	2822	10935	7871	2926	10000	7478	3186	9405	7549	3342
	24	32	7505	5296	1366	9712	6503	1625	9071	6306	1871	11955	8129	2822	11530	7871	2952	10340	7607	3264	9575	7742	3446
1.8+2.5+2.5+5.0	12	18	6073	4753	1403	6975	5886	1659	6567	5733	1884	8470	7356	2792	8215	7099	2896	7790	6577	3078	7535	6520	3182
	14	20	6073	4753	1403	7382	5886	1659	6975	5777	1901	8980	7356	2818	8725	7163	2922	8215	6577	3104	7960	6584	3234
	16	22	6073	4962	1419	7790	5886	1676	7324	5777	1919	9490	7356	2844	9235	7163	2974	8725	6577	3156	8470	6584	3260
	18	25	6403	5212	1434	8198	6283	1692	7674	6130	1936	10000	7871	2870	9660	7614	2974	9150	7028	3182	8810	6970	3286
	19	27	6569	5337	1450	8431	6547	1709	7906	6350	1954	10340	8193	2896	10000	7935	3000	9490	7349	3182	9150	7292	3286
	22	30	7119	5296	1450	9188	6503	1709	8605	6306	1954	11275	8129	2922	10935	7871	3026	10000	7478	3286	9405	7549	3442
	24	32	7505	5296	1466	9712	6503	1725	9071	6306	1971	11955	8129	2922	11530	7871	3052	10340	7607	3364	9575	7742	3546
1.8+2.5+2.5+6.0	12	18	6073	4753	1503	6975	5886	1759	6567	5733	1984	8470	7356	2892	8215	7099	2996	7790	6577	3178	7535	6520	3282
	14	20	6073	4753	1503	7382	5886	1759	6975	5777	2001	8980	7356	2918	8725	7163	3022	8215	6577	3204	7960	6584	3334
	16	22	6073	4962	1519	7790	5886	1776	7324	5777	2019	9490	7356	2944	9235	7163	3074	8725	6577	3256	8470	6584	3360
	18	25	6403	5212	1534	8198	6283	1792	7674	6130	2036	10000	7871	2970	9660	7614	3074	9150	7028	3282	8810	6970	3386
	19	27	6569	5337	1550	8431	6547	1809	7906	6350	2054	10340	8193	2996	10000	7935	3100	9490	7349	3282	9150	7292	3386
	22	30	7119	5296	1550	9188	6503	1809	8605	6306	2054	11275	8129	3022	10935	7871	3126	10000	7478	3386	9405	7549	3542
	24	32	7505	5296	1566	9712	6503	1825	9071	6306	2071	11955	8129	3022	11530	7871	3152	10340	7607	3464	9575	7742	3646
1.8+2.5+3.5+3.5	12	18	6073	4753	1403	6975	5886	1659	6567	5733	1884	8470	7356	2792	8215	7099	2896	7790	6577	3078	7535	6520	3182
	14	20	6073	4753	1403	7382	5886	1659	6975	5777	1901	8980	7356	2818	8725	7163	2922	8215	6577	3104	7960	6584	3234
	16	22	6073	4962	1419	7790	5886	1676	7324	5777	1919	9490	7356	2844	9235	7163	2974	8725	6577	3156	8470	6584	3260
	18	25	6403	5212	1434	8198	6283	1692	7674	6130	1936	10000	7871	2870	9660	7614	2974	9150	7028	3182	8810	6970	3286
	19	27	6569	5337	1450	8431	6547	1709	7906	6350	1954	10340	8193	2896	10000	7935	3000	9490	7349	3182	9150	7292	3286
	22	30	7119	5296	1450	9188	6503	1709	8605	6306	1954	11275	8129	2922	10935	7871	3026	10000	7478	3286	9405	7549	3442
	24	32	7505	5296	1466	9712	6503	1725	9071	6306	1971	11955	8129	2922	11530	7871	3052	10340	7607	3364	9575	7742	3546
1.8+2.5+3.5+4.2	12	18	6073	4753	1503	6975	5886	1759	6567	5733	1984	8470	7356	2892	8215	7099	2996	7790	6577	3178	7535	6520	3282
	14	20	6073	4753	1503	7382	5886	1759	6975	5777	2001	8980	7356	2918	8725	7163	3022	8215	6577	3204	7960	6584	3334
	16	22	6073	4962	1519	7790	5886	1776	7324	5777	2019	9490	7356	2944	9235	7163	3074	8725	6577	3256	8470	6584	3360
	18	25	6403	5212	1534	8198	6283	1792	7674	6130	2036	10000	7871	2970	9660	7614	3074	9150	7028	3282	8810	6970	3386
	19	27	6569	5337	1550	8431	6547	1809	7906	6350	2054	10340	8193	2996	10000	7935	3100	9490	7349	3282	9150	7292	3386
	22	30	7119	5296	1550	9188	6503	1809	8605	6306	2054	11275	8129	3022	10935	7871	3126	10000	7478	3386	9405	7549	3542
	24	32	7505	5296	1566	9712	6503	1825	9071	6306	2071	11955	8129	3022	11530	7871	3152	10340	7607	3464	9575	7742	3646

	INDOOR		OUTDOOR TEMPERATURE (°CDB)																				
	EWB	EDB	-10			21			27			32			35			40			43		
	°C	°C	TC	SHC	PI	TC	SHC	PI	TC	SHC	PI	TC	SHC	PI	TC	SHC	PI	TC	SHC	PI	TC	SHC	PI
1.8+2.5+3.5+5.0	12	18	6073	4753	1783	6975	5886	2039	6567	5733	2264	8470	7356	3172	8215	7099	3276	7790	6577	3458	7535	6520	3562
	14	20	6073	4753	1783	7382	5886	2039	6975	5777	2281	8980	7356	3198	8725	7163	3302	8215	6577	3484	7960	6584	3614
	16	22	6073	4962	1799	7790	5886	2056	7324	5777	2299	9490	7356	3224	9235	7163	3354	8725	6577	3536	8470	6584	3640
	18	25	6403	5212	1814	8198	6283	2072	7674	6130	2316	10000	7871	3250	9660	7614	3354	9150	7028	3562	8810	6970	3666
	19	27	6569	5337	1830	8431	6547	2089	7906	6350	2334	10340	8193	3276	10000	7935	3380	9490	7349	3562	9150	7292	3666
	22	30	7119	5296	1830	9188	6503	2089	8605	6306	2334	11275	8129	3302	10935	7871	3406	10000	7478	3666	9405	7549	3822
	24	32	7505	5296	1846	9712	6503	2105	9071	6306	2351	11955	8129	3302	11530	7871	3432	10340	7607	3744	9575	7742	3926
1.8+2.5+3.5+6.0	12	18	6073	4753	1953	6975	5886	2209	6567	5733	2434	8470	7356	3342	8215	7099	3446	7790	6577	3628	7535	6520	3732
	14	20	6073	4753	1953	7382	5886	2209	6975	5777	2451	8980	7356	3368	8725	7163	3472	8215	6577	3654	7960	6584	3784
	16	22	6073	4962	1969	7790	5886	2226	7324	5777	2469	9490	7356	3394	9235	7163	3524	8725	6577	3706	8470	6584	3810
	18	25	6403	5212	1984	8198	6283	2242	7674	6130	2486	10000	7871	3420	9660	7614	3524	9150	7028	3732	8810	6970	3836
	19	27	6569	5337	2000	8431	6547	2259	7906	6350	2504	10340	8193	3446	10000	7935	3550	9490	7349	3732	9150	7292	3836
	22	30	7119	5296	2000	9188	6503	2259	8605	6306	2504	11275	8129	3472	10935	7871	3576	10000	7478	3836	9405	7549	3992
	24	32	7505	5296	2016	9712	6503	2275	9071	6306	2521	11955	8129	3472	11530	7871	3602	10340	7607	3914	9575	7742	4096
1.8+2.5+4.2+4.2	12	18	6073	4753	1603	6975	5886	1859	6567	5733	2084	8470	7356	2992	8215	7099	3096	7790	6577	3278	7535	6520	3382
	14	20	6073	4753	1603	7382	5886	1859	6975	5777	2101	8980	7356	3018	8725	7163	3122	8215	6577	3304	7960	6584	3434
	16	22	6073	4962	1619	7790	5886	1876	7324	5777	2119	9490	7356	3044	9235	7163	3174	8725	6577	3356	8470	6584	3460
	18	25	6403	5212	1634	8198	6283	1892	7674	6130	2136	10000	7871	3070	9660	7614	3174	9150	7028	3382	8810	6970	3486
	19	27	6569	5337	1650	8431	6547	1909	7906	6350	2154	10340	8193	3096	10000	7935	3200	9490	7349	3382	9150	7292	3486
	22	30	7119	5296	1650	9188	6503	1909	8605	6306	2154	11275	8129	3122	10935	7871	3226	10000	7478	3486	9405	7549	3642
	24	32	7505	5296	1666	9712	6503	1925	9071	6306	2171	11955	8129	3122	11530	7871	3252	10340	7607	3564	9575	7742	3746
1.8+2.5+4.2+5.0	12	18	6073	4753	2093	6975	5886	2349	6567	5733	2574	8470	7356	3482	8215	7099	3586	7790	6577	3768	7535	6520	3872
	14	20	6073	4753	2093	7382	5886	2349	6975	5777	2591	8980	7356	3508	8725	7163	3612	8215	6577	3794	7960	6584	3924
	16	22	6073	4962	2109	7790	5886	2366	7324	5777	2609	9490	7356	3534	9235	7163	3664	8725	6577	3846	8470	6584	3950
	18	25	6403	5212	2124	8198	6283	2382	7674	6130	2626	10000	7871	3560	9660	7614	3664	9150	7028	3872	8810	6970	3976
	19	27	6569	5337	2140	8431	6547	2399	7906	6350	2644	10340	8193	3586	10000	7935	3690	9490	7349	3872	9150	7292	3976
	22	30	7119	5296	2140	9188	6503	2399	8605	6306	2644	11275	8129	3612	10935	7871	3716	10000	7478	3976	9405	7549	4132
	24	32	7505	5296	2156	9712	6503	2415	9071	6306	2661	11955	8129	3612	11530	7871	3742	10340	7607	4054	9575	7742	4236
1.8+2.5+4.2+6.0	12	18	6073	4753	2203	6975	5886	2459	6567	5733	2684	8470	7356	3592	8215	7099	3696	7790	6577	3878	7535	6520	3982
	14	20	6073	4753	2203	7382	5886	2459	6975	5777	2701	8980	7356	3618	8725	7163	3722	8215	6577	3904	7960	6584	4034
	16	22	6073	4962	2219	7790	5886	2476	7324	5777	2719	9490	7356	3644	9235	7163	3774	8725	6577	3956	8470	6584	4060
	18	25	6403	5212	2234	8198	6283	2492	7674	6130	2736	10000	7871	3670	9660	7614	3774	9150	7028	3982	8810	6970	4086
	19	27	6569	5337	2250	8431	6547	2509	7906	6350	2754	10340	8193	3696	10000	7935	3800	9490	7349	3982	9150	7292	4086
	22	30	7119	5296	2250	9188	6503	2509	8605	6306	2754	11275	8129	3722	10935	7871	3826	10000	7478	4086	9405	7549	4242
	24	32	7505	5296	2266	9712	6503	2525	9071	6306	2771	11955	8129	3722	11530	7871	3852	10340	7607	4164	9575	7742	4346
1.8+2.5+5.0+5.0	12	18	6073	4753	2303	6975	5886	2559	6567	5733	2784	8470	7356	3692	8215	7099	3876	7790	6577	3978	7535	6520	4082
	14	20	6073	4753	2303	7382	5886	2559	6975	5777	2801	8980	7356	3718	8725	7163	3902	8215	6577	4004	7960	6584	4134
	16	22	6073	4962	2319	7790	5886	2576	7324	5777	2819	9490	7356	3744	9235	7163	3954	8725	6577	4056	8470	6584	4160
	18	25	6403	5212	2334	8198	6283	2592	7674	6130	2836	10000	7871	3770	9660	7614	3954	9150	7028	4082	8810	6970	4186
	19	27	6569	5337	2350	8431	6547	2609	7906	6350	2854	10340	8193	3796	10000	7935	3980	9490	7349	4082	9150	7292	4186
	22	30	7119	5296	2350	9188	6503	2609	8605	6306	2854	11275	8129	3822	10935	7871	4006	10000	7478	4186	9405	7549	4342
	24	32	7505	5296	2366	9712	6503	2625	9071	6306	2871	11955	8129	3822	11530	7871	4032	10340	7607	4264	9575	7742	4446

	INDOOR		OUTDOOR TEMPERATURE (°CDB)																				
	EWB	EDB	-10			21			27			32			35			40			43		
	°C	°C	TC	SHC	PI	TC	SHC	PI	TC	SHC	PI	TC	SHC	PI	TC	SHC	PI	TC	SHC	PI	TC	SHC	PI
1.8+2.5+5.0+6.0	12	18	6073	4753	2403	6975	5886	2659	6567	5733	2884	8470	7356	3792	8215	7099	3896	7790	6577	4078	7535	6520	4182
	14	20	6073	4753	2403	7382	5886	2659	6975	5777	2901	8980	7356	3818	8725	7163	3922	8215	6577	4104	7960	6584	4234
	16	22	6073	4962	2419	7790	5886	2676	7324	5777	2919	9490	7356	3844	9235	7163	3974	8725	6577	4156	8470	6584	4260
	18	25	6403	5212	2434	8198	6283	2692	7674	6130	2936	10000	7871	3870	9660	7614	3974	9150	7028	4182	8810	6970	4286
	19	27	6569	5337	2450	8431	6547	2709	7906	6350	2954	10340	8193	3896	10000	7935	4000	9490	7349	4182	9150	7292	4286
	22	30	7119	5296	2450	9188	6503	2709	8605	6306	2954	11275	8129	3922	10935	7871	4026	10000	7478	4286	9405	7549	4442
	24	32	7505	5296	2466	9712	6503	2725	9071	6306	2971	11955	8129	3922	11530	7871	4052	10340	7607	4364	9575	7742	4546
1.8+2.5+6.0+6.0	12	18	6073	4753	2403	6975	5886	2659	6567	5733	2884	8470	7356	3792	8215	7099	3896	7790	6577	4078	7535	6520	4182
	14	20	6073	4753	2403	7382	5886	2659	6975	5777	2901	8980	7356	3818	8725	7163	3922	8215	6577	4104	7960	6584	4234
	16	22	6073	4962	2419	7790	5886	2676	7324	5777	2919	9490	7356	3844	9235	7163	3974	8725	6577	4156	8470	6584	4260
	18	25	6403	5212	2434	8198	6283	2692	7674	6130	2936	10000	7871	3870	9660	7614	3974	9150	7028	4182	8810	6970	4286
	19	27	6569	5337	2450	8431	6547	2709	7906	6350	2954	10340	8193	3896	10000	7935	4000	9490	7349	4182	9150	7292	4286
	22	30	7119	5296	2450	9188	6503	2709	8605	6306	2954	11275	8129	3922	10935	7871	4026	10000	7478	4286	9405	7549	4442
	24	32	7505	5296	2466	9712	6503	2725	9071	6306	2971	11955	8129	3922	11530	7871	4052	10340	7607	4364	9575	7742	4546
1.8+3.5+3.5+3.5	12	18	6073	4753	1903	6975	5886	2159	6567	5733	2384	8470	7356	3292	8215	7099	3396	7790	6577	3578	7535	6520	3682
	14	20	6073	4753	1903	7382	5886	2159	6975	5777	2401	8980	7356	3318	8725	7163	3422	8215	6577	3604	7960	6584	3734
	16	22	6073	4962	1919	7790	5886	2176	7324	5777	2419	9490	7356	3344	9235	7163	3474	8725	6577	3656	8470	6584	3760
	18	25	6403	5212	1934	8198	6283	2192	7674	6130	2436	10000	7871	3370	9660	7614	3474	9150	7028	3682	8810	6970	3786
	19	27	6569	5337	1950	8431	6547	2209	7906	6350	2454	10340	8193	3396	10000	7935	3500	9490	7349	3682	9150	7292	3786
	22	30	7119	5296	1950	9188	6503	2209	8605	6306	2454	11275	8129	3422	10935	7871	3526	10000	7478	3786	9405	7549	3942
	24	32	7505	5296	1966	9712	6503	2225	9071	6306	2471	11955	8129	3422	11530	7871	3552	10340	7607	3864	9575	7742	4046
1.8+3.5+3.5+4.2	12	18	6073	4753	2023	6975	5886	2279	6567	5733	2504	8470	7356	3412	8215	7099	3516	7790	6577	3698	7535	6520	3802
	14	20	6073	4753	2023	7382	5886	2279	6975	5777	2521	8980	7356	3438	8725	7163	3542	8215	6577	3724	7960	6584	3854
	16	22	6073	4962	2039	7790	5886	2296	7324	5777	2539	9490	7356	3464	9235	7163	3594	8725	6577	3776	8470	6584	3880
	18	25	6403	5212	2054	8198	6283	2312	7674	6130	2556	10000	7871	3490	9660	7614	3594	9150	7028	3802	8810	6970	3906
	19	27	6569	5337	2070	8431	6547	2329	7906	6350	2574	10340	8193	3516	10000	7935	3620	9490	7349	3802	9150	7292	3906
	22	30	7119	5296	2070	9188	6503	2329	8605	6306	2574	11275	8129	3542	10935	7871	3646	10000	7478	3906	9405	7549	4062
	24	32	7505	5296	2086	9712	6503	2345	9071	6306	2591	11955	8129	3542	11530	7871	3672	10340	7607	3984	9575	7742	4166
1.8+3.5+3.5+5.0	12	18	6073	4753	2203	6975	5886	2459	6567	5733	2684	8470	7356	3592	8215	7099	3696	7790	6577	3878	7535	6520	3982
	14	20	6073	4753	2203	7382	5886	2459	6975	5777	2701	8980	7356	3618	8725	7163	3722	8215	6577	3904	7960	6584	4034
	16	22	6073	4962	2219	7790	5886	2476	7324	5777	2719	9490	7356	3644	9235	7163	3774	8725	6577	3956	8470	6584	4060
	18	25	6403	5212	2234	8198	6283	2492	7674	6130	2736	10000	7871	3670	9660	7614	3774	9150	7028	3982	8810	6970	4086
	19	27	6569	5337	2250	8431	6547	2509	7906	6350	2754	10340	8193	3696	10000	7935	3800	9490	7349	3982	9150	7292	4086
	22	30	7119	5296	2250	9188	6503	2509	8605	6306	2754	11275	8129	3722	10935	7871	3826	10000	7478	4086	9405	7549	4242
	24	32	7505	5296	2266	9712	6503	2525	9071	6306	2771	11955	8129	3722	11530	7871	3852	10340	7607	4164	9575	7742	4346
1.8+3.5+3.5+6.0	12	18	6073	4753	2203	6975	5886	2459	6567	5733	2684	8470	7356	3592	8215	7099	3696	7790	6577	3878	7535	6520	3982
	14	20	6073	4753	2203	7382	5886	2459	6975	5777	2701	8980	7356	3618	8725	7163	3722	8215	6577	3904	7960	6584	4034
	16	22	6073	4962	2219	7790	5886	2476	7324	5777	2719	9490	7356	3644	9235	7163	3774	8725	6577	3956	8470	6584	4060
	18	25	6403	5212	2234	8198	6283	2492	7674	6130	2736	10000	7871	3670	9660	7614	3774	9150	7028	3982	8810	6970	4086
	19	27	6569	5337	2250	8431	6547	2509	7906	6350	2754	10340	8193	3696	10000	7935	3800	9490	7349	3982	9150	7292	4086
	22	30	7119	5296	2250	9188	6503	2509	8605	6306	2754	11275	8129	3722	10935	7871	3826	10000	7478	4086	9405	7549	4242
	24	32	7505	5296	2266	9712	6503	2525	9071	6306	2771	11955	8129	3722	11530	7871	3852	10340	7607	4164	9575	7742	4346
1.8+3.5+4.2+4.2	12	18	6073	4753	2003	6975	5886	2259	6567	5733	2484	8470	7356	3392	8215	7099	3496	7790	6577	3678	7535	6520	3782
	14	20	6073	4753	2003	7382	5886	2259	6975	5777	2501	8980	7356	3418	8725	7163	3522	8215	6577	3704	7960	6584	3834
	16	22	6073	4962	2019	7790	5886	2276	7324	5777	2519	9490	7356	3444	9235	7163	3574	8725	6577	3756	8470	6584	3860
	18	25	6403	5212	2034	8198	6283	2292	7674	6130	2536	10000	7871	3470	9660	7614	3574	9150	7028	3782	8810	6970	3886
	19	27	6569	5337	2050	8431	6547	2309	7906	6350	2554	10340	8193	3496	10000	7935	3600	9490	7349	3782	9150	7292	3886
	22	30	7119	5296	2050	9188	6503	2309	8605	6306	2554	11275	8129	3522	10935	7871	3626	10000	7478	3886	9405	7549	4042
	24	32	7505	5296	2066	9712	6503	2325	9071	6306	2571	11955	8129	3522	11530	7871	3652	10340	7607	3964	9575	7742	4146

	INDOOR		OUTDOOR TEMPERATURE (°CDB)																				
	EWB	EDB	-10			21			27			32			35			40			43		
	°C	°C	TC	SHC	PI	TC	SHC	PI	TC	SHC	PI	TC	SHC	PI	TC	SHC	PI	TC	SHC	PI	TC	SHC	PI
1.8+3.5+4.2+5.0	12	18	6073	4753	2303	6975	5886	2559	6567	5733	2784	8470	7356	3692	8215	7099	3796	7790	6577	3978	7535	6520	4082
	14	20	6073	4753	2303	7382	5886	2559	6975	5777	2801	8980	7356	3718	8725	7163	3822	8215	6577	4004	7960	6584	4134
	16	22	6073	4962	2319	7790	5886	2576	7324	5777	2819	9490	7356	3744	9235	7163	3874	8725	6577	4056	8470	6584	4160
	18	25	6403	5212	2334	8198	6283	2592	7674	6130	2836	10000	7871	3770	9660	7614	3874	9150	7028	4082	8810	6970	4186
	19	27	6569	5337	2350	8431	6547	2609	7906	6350	2854	10340	8193	3796	10000	7935	3900	9490	7349	4082	9150	7292	4186
	22	30	7119	5296	2350	9188	6503	2609	8605	6306	2854	11275	8129	3822	10935	7871	3926	10000	7478	4186	9405	7549	4342
	24	32	7505	5296	2366	9712	6503	2625	9071	6306	2871	11955	8129	3822	11530	7871	3952	10340	7607	4264	9575	7742	4446
1.8+3.5+4.2+6.0	12	18	6073	4753	2403	6975	5886	2659	6567	5733	2884	8470	7356	3792	8215	7099	3896	7790	6577	4078	7535	6520	4182
	14	20	6073	4753	2403	7382	5886	2659	6975	5777	2901	8980	7356	3818	8725	7163	3922	8215	6577	4104	7960	6584	4234
	16	22	6073	4962	2419	7790	5886	2676	7324	5777	2919	9490	7356	3844	9235	7163	3974	8725	6577	4156	8470	6584	4260
	18	25	6403	5212	2434	8198	6283	2692	7674	6130	2936	10000	7871	3870	9660	7614	3974	9150	7028	4182	8810	6970	4286
	19	27	6569	5337	2450	8431	6547	2709	7906	6350	2954	10340	8193	3896	10000	7935	4000	9490	7349	4182	9150	7292	4286
	22	30	7119	5296	2450	9188	6503	2709	8605	6306	2954	11275	8129	3922	10935	7871	4026	10000	7478	4286	9405	7549	4442
	24	32	7505	5296	2466	9712	6503	2725	9071	6306	2971	11955	8129	3922	11530	7871	4052	10340	7607	4364	9575	7742	4546
1.8+3.5+5.0+5.0	12	18	6073	4753	2403	6975	5886	2659	6567	5733	2884	8470	7356	3792	8215	7099	3896	7790	6577	4078	7535	6520	4182
	14	20	6073	4753	2403	7382	5886	2659	6975	5777	2901	8980	7356	3818	8725	7163	3922	8215	6577	4104	7960	6584	4234
	16	22	6073	4962	2419	7790	5886	2676	7324	5777	2919	9490	7356	3844	9235	7163	3974	8725	6577	4156	8470	6584	4260
	18	25	6403	5212	2434	8198	6283	2692	7674	6130	2936	10000	7871	3870	9660	7614	3974	9150	7028	4182	8810	6970	4286
	19	27	6569	5337	2450	8431	6547	2709	7906	6350	2954	10340	8193	3896	10000	7935	4000	9490	7349	4182	9150	7292	4286
	22	30	7119	5296	2450	9188	6503	2709	8605	6306	2954	11275	8129	3922	10935	7871	4026	10000	7478	4286	9405	7549	4442
	24	32	7505	5296	2466	9712	6503	2725	9071	6306	2971	11955	8129	3922	11530	7871	4052	10340	7607	4364	9575	7742	4546
1.8+3.5+5.0+6.0	12	18	6073	4753	2403	6975	5886	2659	6567	5733	2884	8470	7356	3792	8215	7099	3896	7790	6577	4078	7535	6520	4182
	14	20	6073	4753	2403	7382	5886	2659	6975	5777	2901	8980	7356	3818	8725	7163	3922	8215	6577	4104	7960	6584	4234
	16	22	6073	4962	2419	7790	5886	2676	7324	5777	2919	9490	7356	3844	9235	7163	3974	8725	6577	4156	8470	6584	4260
	18	25	6403	5212	2434	8198	6283	2692	7674	6130	2936	10000	7871	3870	9660	7614	3974	9150	7028	4182	8810	6970	4286
	19	27	6569	5337	2450	8431	6547	2709	7906	6350	2954	10340	8193	3896	10000	7935	4000	9490	7349	4182	9150	7292	4286
	22	30	7119	5296	2450	9188	6503	2709	8605	6306	2954	11275	8129	3922	10935	7871	4026	10000	7478	4286	9405	7549	4442
	24	32	7505	5296	2466	9712	6503	2725	9071	6306	2971	11955	8129	3922	11530	7871	4052	10340	7607	4364	9575	7742	4546
1.8+4.2+4.2+4.2	12	18	6073	4753	2253	6975	5886	2509	6567	5733	2734	8470	7356	3642	8215	7099	3746	7790	6577	3928	7535	6520	4032
	14	20	6073	4753	2253	7382	5886	2509	6975	5777	2751	8980	7356	3668	8725	7163	3772	8215	6577	3954	7960	6584	4084
	16	22	6073	4962	2269	7790	5886	2526	7324	5777	2769	9490	7356	3694	9235	7163	3824	8725	6577	4006	8470	6584	4110
	18	25	6403	5212	2284	8198	6283	2542	7674	6130	2786	10000	7871	3720	9660	7614	3824	9150	7028	4032	8810	6970	4136
	19	27	6569	5337	2300	8431	6547	2559	7906	6350	2804	10340	8193	3746	10000	7935	3850	9490	7349	4032	9150	7292	4136
	22	30	7119	5296	2300	9188	6503	2559	8605	6306	2804	11275	8129	3772	10935	7871	3876	10000	7478	4136	9405	7549	4292
	24	32	7505	5296	2316	9712	6503	2575	9071	6306	2821	11955	8129	3772	11530	7871	3902	10340	7607	4214	9575	7742	4396
1.8+4.2+4.2+5.0	12	18	6073	4753	2403	6975	5886	2659	6567	5733	2884	8470	7356	3792	8215	7099	3896	7790	6577	4078	7535	6520	4182
	14	20	6073	4753	2403	7382	5886	2659	6975	5777	2901	8980	7356	3818	8725	7163	3922	8215	6577	4104	7960	6584	4234
	16	22	6073	4962	2419	7790	5886	2676	7324	5777	2919	9490	7356	3844	9235	7163	3974	8725	6577	4156	8470	6584	4260
	18	25	6403	5212	2434	8198	6283	2692	7674	6130	2936	10000	7871	3870	9660	7614	3974	9150	7028	4182	8810	6970	4286
	19	27	6569	5337	2450	8431	6547	2709	7906	6350	2954	10340	8193	3896	10000	7935	4000	9490	7349	4182	9150	7292	4286
	22	30	7119	5296	2450	9188	6503	2709	8605	6306	2954	11275	8129	3922	10935	7871	4026	10000	7478	4286	9405	7549	4442
	24	32	7505	5296	2466	9712	6503	2725	9071	6306	2971	11955	8129	3922	11530	7871	4052	10340	7607	4364	9575	7742	4546
1.8+4.2+4.2+6.0	12	18	6073	4753	2403	6975	5886	2659	6567	5733	2884	8470	7356	3792	8215	7099	3896	7790	6577	4078	7535	6520	4182
	14	20	6073	4753	2403	7382	5886	2659	6975	5777	2901	8980	7356	3818	8725	7163	3922	8215	6577	4104	7960	6584	4234
	16	22	6073	4962	2419	7790	5886	2676	7324	5777	2919	9490	7356	3844	9235	7163	3974	8725	6577	4156	8470	6584	4260
	18	25	6403	5212	2434	8198	6283	2692	7674	6130	2936	10000	7871	3870	9660	7614	3974	9150	7028	4182	8810	6970	4286
	19	27	6569	5337	2450	8431	6547	2709	7906	6350	2954	10340	8193	3896	10000	7935	4000	9490	7349	4182	9150	7292	4286
	22	30	7119	5296	2450	9188	6503	2709	8605	6306	2954	11275	8129	3922	10935	7871	4026	10000	7478	4286	9405	7549	4442
	24	32	7505	5296	2466	9712	6503	2725	9071	6306	2971	11955	8129	3922	11530	7871	4052	10340	7607	4364	9575	7742	4546
1.8+4.2+5.0+5.0	12	18	6073	4753	2403	6975	5886	2659	6567	5733	2884	8470	7356	3792	8215	7099	3896	7790	6577	4078	7535	6520	4182
	14	20	6073	4753	2403	7382	5886	2659	6975	5777	2901	8980	7356	3818	8725	7163	3922	8215	6577	4104	7960	6584	4234
	16	22	6073	4962	2419	7790	5886	2676	7324	5777	2919	9490	7356	3844	9235	7163	3974	8725	6577	4156	8470	6584	4260
	18	25	6403	5212	2434	8198	6283	2692	7674	6130	2936	10000	7871	3870	9660	7614	3974	9150	7028	4182	8810	6970	4286
	19	27	6569	5337	2450	8431	6547	2709	7906	6350	2954	10340	8193	3896	10000	7935	4000	9490	7349	4182	9150	7292	4286
	22	30	7119	5296	2450	9188	6503	2709	8605	6306	2954	11275	8129	3922	10935	7871	4026	10000	7478	4286	9405	7549	4442
	24	32	7505	5296	2466	9712	6503	2725	9071	6306	2971	11955	8129	3922	11530	7871	4052	10340	7607	4364	9575	7742	4546
2.5+2.5+2.5+2.5	12	18	5073	3753	1164	6475	5586	1611	6567	5733	2052	8470	7356	2925	8215	7099	3025	7790	6777	3200	7535	6520	3300
	14	20	5073	3753	1164	6882	5586	1611	6975	5777	2069	8980	7356	2950	8725	7163	3050	8215	6777	3225	7960	6584	3350
	16	22	5073	3962	1180	7290	5586	1627	7324	5777	2085	9490	7356	2950	9235	7163	3100	8725	6777	3275	8470	6584	3375
	18	25	5403	4212	1195	7698	5983	1643	7674	6130	2102	10000	7871	3000	9660	7614	3100	9150	7228	3300	8810	6970	3400
	19	27	5569	4337	1210	7931	6247	1659	7906	6350	2119	10340	8193	3025	10000	7935	3096	9490	7549	3300	9150	7292	3400
	22	30	6119	4296	1210	8688	6203	1659	8605	6306	2119	11275	8129	3050	10935	7871	3150	10000	7678	3400	9405	7549	3550
	24	32	6505	4296	1225	9212	6203	1674	9071	6306	2136	11955	8129	3050	11530	7871	3175	10340	7807	3475	9575	7742	3650

	INDOOR		OUTDOOR TEMPERATURE (°CDB)																				
	EWB	EDB	-10			21			27			32			35			40			43		
	°C	°C	TC	SHC	PI	TC	SHC	PI	TC	SHC	PI	TC	SHC	PI	TC	SHC	PI	TC	SHC	PI	TC	SHC	PI
2.5+2.5+2.5+3.5	12	18	6073	4753	1403	6975	5886	1659	6567	5733	1884	8470	7356	2792	8215	7099	2896	7790	6577	3078	7535	6520	3182
	14	20	6073	4753	1403	7382	5886	1659	6975	5777	1901	8980	7356	2818	8725	7163	2922	8215	6577	3104	7960	6584	3234
	16	22	6073	4962	1419	7790	5886	1676	7324	5777	1919	9490	7356	2844	9235	7163	2974	8725	6577	3156	8470	6584	3260
	18	25	6403	5212	1434	8198	6283	1692	7674	6130	1936	10000	7871	2870	9660	7614	2974	9150	7028	3182	8810	6970	3286
	19	27	6569	5337	1450	8431	6547	1709	7906	6350	1954	10340	8193	2896	10000	7935	3000	9490	7349	3182	9150	7292	3286
	22	30	7119	5296	1450	9188	6503	1709	8605	6306	1954	11275	8129	2922	10935	7871	3026	10000	7478	3286	9405	7549	3442
	24	32	7505	5296	1466	9712	6503	1725	9071	6306	1971	11955	8129	2922	11530	7871	3052	10340	7607	3364	9575	7742	3546
2.5+2.5+2.5+4.2	12	18	6073	4753	1553	6975	5886	1809	6567	5733	2034	8470	7356	2942	8215	7099	3046	7790	6577	3228	7535	6520	3332
	14	20	6073	4753	1553	7382	5886	1809	6975	5777	2051	8980	7356	2968	8725	7163	3072	8215	6577	3254	7960	6584	3384
	16	22	6073	4962	1569	7790	5886	1826	7324	5777	2069	9490	7356	2994	9235	7163	3124	8725	6577	3306	8470	6584	3410
	18	25	6403	5212	1584	8198	6283	1842	7674	6130	2086	10000	7871	3020	9660	7614	3124	9150	7028	3332	8810	6970	3436
	19	27	6569	5337	1600	8431	6547	1859	7906	6350	2104	10340	8193	3046	10000	7935	3150	9490	7349	3332	9150	7292	3436
	22	30	7119	5296	1600	9188	6503	1859	8605	6306	2104	11275	8129	3072	10935	7871	3176	10000	7478	3436	9405	7549	3592
	24	32	7505	5296	1616	9712	6503	1875	9071	6306	2121	11955	8129	3072	11530	7871	3202	10340	7607	3514	9575	7742	3696
2.5+2.5+2.5+5.0	12	18	6073	4753	1853	6975	5886	2109	6567	5733	2334	8470	7356	3242	8215	7099	3346	7790	6577	3528	7535	6520	3632
	14	20	6073	4753	1853	7382	5886	2109	6975	5777	2351	8980	7356	3268	8725	7163	3372	8215	6577	3554	7960	6584	3684
	16	22	6073	4962	1869	7790	5886	2126	7324	5777	2369	9490	7356	3294	9235	7163	3424	8725	6577	3606	8470	6584	3710
	18	25	6403	5212	1884	8198	6283	2142	7674	6130	2386	10000	7871	3320	9660	7614	3424	9150	7028	3632	8810	6970	3736
	19	27	6569	5337	1900	8431	6547	2159	7906	6350	2404	10340	8193	3346	10000	7935	3450	9490	7349	3632	9150	7292	3736
	22	30	7119	5296	1900	9188	6503	2159	8605	6306	2404	11275	8129	3372	10935	7871	3476	10000	7478	3736	9405	7549	3892
	24	32	7505	5296	1916	9712	6503	2175	9071	6306	2421	11955	8129	3372	11530	7871	3502	10340	7607	3814	9575	7742	3996
2.5+2.5+2.5+6.0	12	18	6073	4753	1903	6975	5886	2159	6567	5733	2384	8470	7356	3292	8215	7099	3396	7790	6577	3578	7535	6520	3682
	14	20	6073	4753	1903	7382	5886	2159	6975	5777	2401	8980	7356	3318	8725	7163	3422	8215	6577	3604	7960	6584	3734
	16	22	6073	4962	1919	7790	5886	2176	7324	5777	2419	9490	7356	3344	9235	7163	3474	8725	6577	3656	8470	6584	3760
	18	25	6403	5212	1934	8198	6283	2192	7674	6130	2436	10000	7871	3370	9660	7614	3474	9150	7028	3682	8810	6970	3786
	19	27	6569	5337	1950	8431	6547	2209	7906	6350	2454	10340	8193	3396	10000	7935	3500	9490	7349	3682	9150	7292	3786
	22	30	7119	5296	1950	9188	6503	2209	8605	6306	2454	11275	8129	3422	10935	7871	3526	10000	7478	3786	9405	7549	3942
	24	32	7505	5296	1966	9712	6503	2225	9071	6306	2471	11955	8129	3422	11530	7871	3552	10340	7607	3864	9575	7742	4046
2.5+2.5+3.5+3.5	12	18	6073	4753	1603	6975	5886	1859	6567	5733	2084	8470	7356	2992	8215	7099	3096	7790	6577	3278	7535	6520	3382
	14	20	6073	4753	1603	7382	5886	1859	6975	5777	2101	8980	7356	3018	8725	7163	3122	8215	6577	3304	7960	6584	3434
	16	22	6073	4962	1619	7790	5886	1876	7324	5777	2119	9490	7356	3044	9235	7163	3174	8725	6577	3356	8470	6584	3460
	18	25	6403	5212	1634	8198	6283	1892	7674	6130	2136	10000	7871	3070	9660	7614	3174	9150	7028	3382	8810	6970	3486
	19	27	6569	5337	1650	8431	6547	1909	7906	6350	2154	10340	8193	3096	10000	7935	3200	9490	7349	3382	9150	7292	3486
	22	30	7119	5296	1650	9188	6503	1909	8605	6306	2154	11275	8129	3122	10935	7871	3226	10000	7478	3486	9405	7549	3642
	24	32	7505	5296	1666	9712	6503	1925	9071	6306	2171	11955	8129	3122	11530	7871	3252	10340	7607	3564	9575	7742	3746
2.5+2.5+3.5+4.2	12	18	6073	4753	1803	6975	5886	2059	6567	5733	2284	8470	7356	3192	8215	7099	3296	7790	6577	3478	7535	6520	3582
	14	20	6073	4753	1803	7382	5886	2059	6975	5777	2301	8980	7356	3218	8725	7163	3322	8215	6577	3504	7960	6584	3634
	16	22	6073	4962	1819	7790	5886	2076	7324	5777	2319	9490	7356	3244	9235	7163	3374	8725	6577	3556	8470	6584	3660
	18	25	6403	5212	1834	8198	6283	2092	7674	6130	2336	10000	7871	3270	9660	7614	3374	9150	7028	3582	8810	6970	3686
	19	27	6569	5337	1850	8431	6547	2109	7906	6350	2354	10340	8193	3296	10000	7935	3400	9490	7349	3582	9150	7292	3686
	22	30	7119	5296	1850	9188	6503	2109	8605	6306	2354	11275	8129	3322	10935	7871	3426	10000	7478	3686	9405	7549	3842
	24	32	7505	5296	1866	9712	6503	2125	9071	6306	2371	11955	8129	3322	11530	7871	3452	10340	7607	3764	9575	7742	3946

	INDOOR		OUTDOOR TEMPERATURE (°CDB)																				
	EWB	EDB	-10			21			27			32			35			40			43		
	°C	°C	TC	SHC	PI	TC	SHC	PI	TC	SHC	PI	TC	SHC	PI	TC	SHC	PI	TC	SHC	PI	TC	SHC	PI
2.5+2.5+3.5+5.0	12	18	6073	4753	2003	6975	5886	2259	6567	5733	2484	8470	7356	3392	8215	7099	3496	7790	6577	3678	7535	6520	3782
	14	20	6073	4753	2003	7382	5886	2259	6975	5777	2501	8980	7356	3418	8725	7163	3522	8215	6577	3704	7960	6584	3834
	16	22	6073	4962	2019	7790	5886	2276	7324	5777	2519	9490	7356	3444	9235	7163	3574	8725	6577	3756	8470	6584	3860
	18	25	6403	5212	2034	8198	6283	2292	7674	6130	2536	10000	7871	3470	9660	7614	3574	9150	7028	3782	8810	6970	3886
	19	27	6569	5337	2050	8431	6547	2309	7906	6350	2554	10340	8193	3496	10000	7935	3600	9490	7349	3782	9150	7292	3886
	22	30	7119	5296	2050	9188	6503	2309	8605	6306	2554	11275	8129	3522	10935	7871	3626	10000	7478	3886	9405	7549	4042
	24	32	7505	5296	2066	9712	6503	2325	9071	6306	2571	11955	8129	3522	11530	7871	3652	10340	7607	3964	9575	7742	4146
2.5+2.5+3.5+6.0	12	18	6073	4753	2203	6975	5886	2459	6567	5733	2684	8470	7356	3592	8215	7099	3696	7790	6577	3878	7535	6520	3982
	14	20	6073	4753	2203	7382	5886	2459	6975	5777	2701	8980	7356	3618	8725	7163	3722	8215	6577	3904	7960	6584	4034
	16	22	6073	4962	2219	7790	5886	2476	7324	5777	2719	9490	7356	3644	9235	7163	3774	8725	6577	3956	8470	6584	4060
	18	25	6403	5212	2234	8198	6283	2492	7674	6130	2736	10000	7871	3670	9660	7614	3774	9150	7028	3982	8810	6970	4086
	19	27	6569	5337	2250	8431	6547	2509	7906	6350	2754	10340	8193	3696	10000	7935	3800	9490	7349	3982	9150	7292	4086
	22	30	7119	5296	2250	9188	6503	2509	8605	6306	2754	11275	8129	3722	10935	7871	3826	10000	7478	4086	9405	7549	4242
	24	32	7505	5296	2266	9712	6503	2525	9071	6306	2771	11955	8129	3722	11530	7871	3852	10340	7607	4164	9575	7742	4346
2.5+2.5+4.2+4.2	12	18	6073	4753	2003	6975	5886	2259	6567	5733	2484	8470	7356	3392	8215	7099	3496	7790	6577	3678	7535	6520	3782
	14	20	6073	4753	2003	7382	5886	2259	6975	5777	2501	8980	7356	3418	8725	7163	3522	8215	6577	3704	7960	6584	3834
	16	22	6073	4962	2019	7790	5886	2276	7324	5777	2519	9490	7356	3444	9235	7163	3574	8725	6577	3756	8470	6584	3860
	18	25	6403	5212	2034	8198	6283	2292	7674	6130	2536	10000	7871	3470	9660	7614	3574	9150	7028	3782	8810	6970	3886
	19	27	6569	5337	2050	8431	6547	2309	7906	6350	2554	10340	8193	3496	10000	7935	3600	9490	7349	3782	9150	7292	3886
	22	30	7119	5296	2050	9188	6503	2309	8605	6306	2554	11275	8129	3522	10935	7871	3626	10000	7478	3886	9405	7549	4042
	24	32	7505	5296	2066	9712	6503	2325	9071	6306	2571	11955	8129	3522	11530	7871	3652	10340	7607	3964	9575	7742	4146
2.5+2.5+4.2+5.0	12	18	6073	4753	2103	6975	5886	2359	6567	5733	2584	8470	7356	3492	8215	7099	3596	7790	6577	3778	7535	6520	3882
	14	20	6073	4753	2103	7382	5886	2359	6975	5777	2601	8980	7356	3518	8725	7163	3622	8215	6577	3804	7960	6584	3934
	16	22	6073	4962	2119	7790	5886	2376	7324	5777	2619	9490	7356	3544	9235	7163	3674	8725	6577	3856	8470	6584	3960
	18	25	6403	5212	2134	8198	6283	2392	7674	6130	2636	10000	7871	3570	9660	7614	3674	9150	7028	3882	8810	6970	3986
	19	27	6569	5337	2150	8431	6547	2409	7906	6350	2654	10340	8193	3596	10000	7935	3700	9490	7349	3882	9150	7292	3986
	22	30	7119	5296	2150	9188	6503	2409	8605	6306	2654	11275	8129	3622	10935	7871	3726	10000	7478	3986	9405	7549	4142
	24	32	7505	5296	2166	9712	6503	2425	9071	6306	2671	11955	8129	3622	11530	7871	3752	10340	7607	4064	9575	7742	4246
2.5+2.5+4.2+6.0	12	18	6073	4753	2383	6975	5886	2639	6567	5733	2864	8470	7356	3772	8215	7099	3876	7790	6577	4058	7535	6520	4162
	14	20	6073	4753	2383	7382	5886	2639	6975	5777	2881	8980	7356	3798	8725	7163	3902	8215	6577	4084	7960	6584	4214
	16	22	6073	4962	2399	7790	5886	2656	7324	5777	2899	9490	7356	3824	9235	7163	3954	8725	6577	4136	8470	6584	4240
	18	25	6403	5212	2414	8198	6283	2672	7674	6130	2916	10000	7871	3850	9660	7614	3954	9150	7028	4162	8810	6970	4266
	19	27	6569	5337	2430	8431	6547	2689	7906	6350	2934	10340	8193	3876	10000	7935	3980	9490	7349	4162	9150	7292	4266
	22	30	7119	5296	2430	9188	6503	2689	8605	6306	2934	11275	8129	3902	10935	7871	4006	10000	7478	4266	9405	7549	4422
	24	32	7505	5296	2446	9712	6503	2705	9071	6306	2951	11955	8129	3902	11530	7871	4032	10340	7607	4344	9575	7742	4526
2.5+2.5+5.0+5.0	12	18	6073	4753	2403	6975	5886	2659	6567	5733	2884	8470	7356	3792	8215	7099	3896	7790	6577	4078	7535	6520	4182
	14	20	6073	4753	2403	7382	5886	2659	6975	5777	2901	8980	7356	3818	8725	7163	3922	8215	6577	4104	7960	6584	4234
	16	22	6073	4962	2419	7790	5886	2676	7324	5777	2919	9490	7356	3844	9235	7163	3974	8725	6577	4156	8470	6584	4260
	18	25	6403	5212	2434	8198	6283	2692	7674	6130	2936	10000	7871	3870	9660	7614	3974	9150	7028	4182	8810	6970	4286
	19	27	6569	5337	2450	8431	6547	2709	7906	6350	2954	10340	8193	3896	10000	7935	4000	9490	7349	4182	9150	7292	4286
	22	30	7119	5296	2450	9188	6503	2709	8605	6306	2954	11275	8129	3922	10935	7871	4026	10000	7478	4286	9405	7549	4442
	24	32	7505	5296	2466	9712	6503	2725	9071	6306	2971	11955	8129	3922	11530	7871	4052	10340	7607	4364	9575	7742	4546
2.5+2.5+5.0+6.0	12	18	6073	4753	2403	6975	5886	2659	6567	5733	2884	8470	7356	3792	8215	7099	3896	7790	6577	4078	7535	6520	4182
	14	20	6073	4753	2403	7382	5886	2659	6975	5777	2901	8980	7356	3818	8725	7163	3922	8215	6577	4104	7960	6584	4234
	16	22	6073	4962	2419	7790	5886	2676	7324	5777	2919	9490	7356	3844	9235	7163	3974	8725	6577	4156	8470	6584	4260
	18	25	6403	5212	2434	8198	6283	2692	7674	6130	2936	10000	7871	3870	9660	7614	3974	9150	7028	4182	8810	6970	4286
	19	27	6569	5337	2450	8431	6547	2709	7906	6350	2954	10340	8193	3896	10000	7935	4000	9490	7349	4182	9150	7292	4286
	22	30	7119	5296	2450	9188	6503	2709	8605	6306	2954	11275	8129	3922	10935	7871	4026	10000	7478	4286	9405	7549	4442
	24	32	7505	5296	2466	9712	6503	2725	9071	6306	2971	11955	8129	3922	11530	7871	4052	10340	7607	4364	9575	7742	4546

	INDOOR		OUTDOOR TEMPERATURE (°CDB)																				
	EWB	EDB	-10			21			27			32			35			40			43		
	°C	°C	TC	SHC	PI	TC	SHC	PI	TC	SHC	PI	TC	SHC	PI	TC	SHC	PI	TC	SHC	PI	TC	SHC	PI
2.5+3.5+3.5+3.5	12	18	6073	4753	1923	6975	5886	2179	6567	5733	2404	8470	7356	3312	8215	7099	3416	7790	6577	3598	7535	6520	3702
	14	20	6073	4753	1923	7382	5886	2179	6975	5777	2421	8980	7356	3338	8725	7163	3442	8215	6577	3624	7960	6584	3754
	16	22	6073	4962	1939	7790	5886	2196	7324	5777	2439	9490	7356	3364	9235	7163	3494	8725	6577	3676	8470	6584	3780
	18	25	6403	5212	1954	8198	6283	2212	7674	6130	2456	10000	7871	3390	9660	7614	3494	9150	7028	3702	8810	6970	3806
	19	27	6569	5337	1970	8431	6547	2229	7906	6350	2474	10340	8193	3416	10000	7935	3520	9490	7349	3702	9150	7292	3806
	22	30	7119	5296	1970	9188	6503	2229	8605	6306	2474	11275	8129	3442	10935	7871	3546	10000	7478	3806	9405	7549	3962
	24	32	7505	5296	1986	9712	6503	2245	9071	6306	2491	11955	8129	3442	11530	7871	3572	10340	7607	3884	9575	7742	4066
2.5+3.5+3.5+4.2	12	18	6073	4753	2023	6975	5886	2279	6567	5733	2504	8470	7356	3412	8215	7099	3516	7790	6577	3698	7535	6520	3802
	14	20	6073	4753	2023	7382	5886	2279	6975	5777	2521	8980	7356	3438	8725	7163	3542	8215	6577	3724	7960	6584	3854
	16	22	6073	4962	2039	7790	5886	2296	7324	5777	2539	9490	7356	3464	9235	7163	3594	8725	6577	3776	8470	6584	3880
	18	25	6403	5212	2054	8198	6283	2312	7674	6130	2556	10000	7871	3490	9660	7614	3594	9150	7028	3802	8810	6970	3906
	19	27	6569	5337	2070	8431	6547	2329	7906	6350	2574	10340	8193	3516	10000	7935	3630	9490	7349	3802	9150	7292	3906
	22	30	7119	5296	2070	9188	6503	2329	8605	6306	2574	11275	8129	3542	10935	7871	3646	10000	7478	3906	9405	7549	4062
	24	32	7505	5296	2086	9712	6503	2345	9071	6306	2591	11955	8129	3542	11530	7871	3672	10340	7607	3984	9575	7742	4166
2.5+3.5+3.5+5.0	12	18	6073	4753	2323	6975	5886	2579	6567	5733	2804	8470	7356	3712	8215	7099	3816	7790	6577	3998	7535	6520	4102
	14	20	6073	4753	2323	7382	5886	2579	6975	5777	2821	8980	7356	3738	8725	7163	3842	8215	6577	4024	7960	6584	4154
	16	22	6073	4962	2339	7790	5886	2596	7324	5777	2839	9490	7356	3764	9235	7163	3894	8725	6577	4076	8470	6584	4180
	18	25	6403	5212	2354	8198	6283	2612	7674	6130	2856	10000	7871	3790	9660	7614	3894	9150	7028	4102	8810	6970	4206
	19	27	6569	5337	2370	8431	6547	2629	7906	6350	2874	10340	8193	3816	10000	7935	3920	9490	7349	4102	9150	7292	4206
	22	30	7119	5296	2370	9188	6503	2629	8605	6306	2874	11275	8129	3842	10935	7871	3946	10000	7478	4206	9405	7549	4362
	24	32	7505	5296	2386	9712	6503	2645	9071	6306	2891	11955	8129	3842	11530	7871	3972	10340	7607	4284	9575	7742	4466
2.5+3.5+3.5+6.0	12	18	6073	4753	2403	6975	5886	2659	6567	5733	2884	8470	7356	3792	8215	7099	3896	7790	6577	4078	7535	6520	4182
	14	20	6073	4753	2403	7382	5886	2659	6975	5777	2901	8980	7356	3818	8725	7163	3922	8215	6577	4104	7960	6584	4234
	16	22	6073	4962	2419	7790	5886	2676	7324	5777	2919	9490	7356	3844	9235	7163	3974	8725	6577	4156	8470	6584	4260
	18	25	6403	5212	2434	8198	6283	2692	7674	6130	2936	10000	7871	3870	9660	7614	3974	9150	7028	4182	8810	6970	4286
	19	27	6569	5337	2450	8431	6547	2709	7906	6350	2954	10340	8193	3896	10000	7935	4000	9490	7349	4182	9150	7292	4286
	22	30	7119	5296	2450	9188	6503	2709	8605	6306	2954	11275	8129	3922	10935	7871	4026	10000	7478	4286	9405	7549	4442
	24	32	7505	5296	2466	9712	6503	2725	9071	6306	2971	11955	8129	3922	11530	7871	4052	10340	7607	4364	9575	7742	4546
2.5+3.5+4.2+4.2	12	18	6073	4753	2223	6975	5886	2479	6567	5733	2704	8470	7356	3612	8215	7099	3716	7790	6577	3898	7535	6520	4002
	14	20	6073	4753	2223	7382	5886	2479	6975	5777	2721	8980	7356	3638	8725	7163	3742	8215	6577	3924	7960	6584	4054
	16	22	6073	4962	2239	7790	5886	2496	7324	5777	2739	9490	7356	3664	9235	7163	3794	8725	6577	3976	8470	6584	4080
	18	25	6403	5212	2254	8198	6283	2512	7674	6130	2756	10000	7871	3690	9660	7614	3794	9150	7028	4002	8810	6970	4106
	19	27	6569	5337	2270	8431	6547	2529	7906	6350	2774	10340	8193	3716	10000	7935	3820	9490	7349	4002	9150	7292	4106
	22	30	7119	5296	2270	9188	6503	2529	8605	6306	2774	11275	8129	3742	10935	7871	3846	10000	7478	4106	9405	7549	4262
	24	32	7505	5296	2286	9712	6503	2545	9071	6306	2791	11955	8129	3742	11530	7871	3872	10340	7607	4184	9575	7742	4366
2.5+3.5+4.2+5.0	12	18	6073	4753	2403	6975	5886	2659	6567	5733	2884	8470	7356	3792	8215	7099	3896	7790	6577	4078	7535	6520	4182
	14	20	6073	4753	2403	7382	5886	2659	6975	5777	2901	8980	7356	3818	8725	7163	3922	8215	6577	4104	7960	6584	4234
	16	22	6073	4962	2419	7790	5886	2676	7324	5777	2919	9490	7356	3844	9235	7163	3974	8725	6577	4156	8470	6584	4260
	18	25	6403	5212	2434	8198	6283	2692	7674	6130	2936	10000	7871	3870	9660	7614	3974	9150	7028	4182	8810	6970	4286
	19	27	6569	5337	2450	8431	6547	2709	7906	6350	2954	10340	8193	3896	10000	7935	4000	9490	7349	4182	9150	7292	4286
	22	30	7119	5296	2450	9188	6503	2709	8605	6306	2954	11275	8129	3922	10935	7871	4026	10000	7478	4286	9405	7549	4442
	24	32	7505	5296	2466	9712	6503	2725	9071	6306	2971	11955	8129	3922	11530	7871	4052	10340	7607	4364	9575	7742	4546
2.5+3.5+4.2+6.0	12	18	6073	4753	2403	6975	5886	2659	6567	5733	2884	8470	7356	3792	8215	7099	3896	7790	6577	4078	7535	6520	4182
	14	20	6073	4753	2403	7382	5886	2659	6975	5777	2901	8980	7356	3818	8725	7163	3922	8215	6577	4104	7960	6584	4234
	16	22	6073	4962	2419	7790	5886	2676	7324	5777	2919	9490	7356	3844	9235	7163	3974	8725	6577	4156	8470	6584	4260
	18	25	6403	5212	2434	8198	6283	2692	7674	6130	2936	10000	7871	3870	9660	7614	3974	9150	7028	4182	8810	6970	4286
	19	27	6569	5337	2450	8431	6547	2709	7906	6350	2954	10340	8193	3896	10000	7935	4000	9490	7349	4182	9150	7292	4286
	22	30	7119	5296	2450	9188	6503	2709	8605	6306	2954	11275	8129	3922	10935	7871	4026	10000	7478	4286	9405	7549	4442
	24	32	7505	5296	2466	9712	6503	2725	9071	6306	2971	11955	8129	3922	11530	7871	4052	10340	7607	4364	9575	7742	4546

	INDOOR		OUTDOOR TEMPERATURE (°CDB)																				
	EWB	EDB	-10			21			27			32			35			40			43		
	°C	°C	TC	SHC	PI	TC	SHC	PI	TC	SHC	PI	TC	SHC	PI	TC	SHC	PI	TC	SHC	PI	TC	SHC	PI
2.5+3.5+5.0+5.0	12	18	6073	4753	2403	6975	5886	2659	6567	5733	2884	8470	7356	3792	8215	7099	3896	7790	6577	4078	7535	6520	4182
	14	20	6073	4753	2403	7382	5886	2659	6975	5777	2901	8980	7356	3818	8725	7163	3922	8215	6577	4104	7960	6584	4234
	16	22	6073	4962	2419	7790	5886	2676	7324	5777	2919	9490	7356	3844	9235	7163	3974	8725	6577	4156	8470	6584	4260
	18	25	6403	5212	2434	8198	6283	2692	7674	6130	2936	10000	7871	3870	9660	7614	3974	9150	7028	4182	8810	6970	4286
	19	27	6569	5337	2450	8431	6547	2709	7906	6350	2954	10340	8193	3896	10000	7935	4000	9490	7349	4182	9150	7292	4286
	22	30	7119	5296	2450	9188	6503	2709	8605	6306	2954	11275	8129	3922	10935	7871	4026	10000	7478	4286	9405	7549	4442
	24	32	7505	5296	2466	9712	6503	2725	9071	6306	2971	11955	8129	3922	11530	7871	4052	10340	7607	4364	9575	7742	4546
3.5+3.5+3.5+3.5	12	18	6073	4753	2203	6975	5886	2459	6567	5733	2684	8470	7356	3592	8215	7099	3696	7790	6577	3878	7535	6520	3982
	14	20	6073	4753	2203	7382	5886	2459	6975	5777	2701	8980	7356	3618	8725	7163	3722	8215	6577	3904	7960	6584	4034
	16	22	6073	4962	2219	7790	5886	2476	7324	5777	2719	9490	7356	3644	9235	7163	3774	8725	6577	3956	8470	6584	4060
	18	25	6403	5212	2234	8198	6283	2492	7674	6130	2736	10000	7871	3670	9660	7614	3774	9150	7028	3982	8810	6970	4086
	19	27	6569	5337	2250	8431	6547	2509	7906	6350	2754	10340	8193	3696	10000	7935	3800	9490	7349	3982	9150	7292	4086
	22	30	7119	5296	2250	9188	6503	2509	8605	6306	2754	11275	8129	3722	10935	7871	3826	10000	7478	4086	9405	7549	4242
	24	32	7505	5296	2266	9712	6503	2525	9071	6306	2771	11955	8129	3722	11530	7871	3852	10340	7607	4164	9575	7742	4346
3.5+3.5+3.5+4.2	12	18	6073	4753	2403	6975	5886	2659	6567	5733	2884	8470	7356	3792	8215	7099	3896	7790	6577	4078	7535	6520	4182
	14	20	6073	4753	2403	7382	5886	2659	6975	5777	2901	8980	7356	3818	8725	7163	3922	8215	6577	4104	7960	6584	4234
	16	22	6073	4962	2419	7790	5886	2676	7324	5777	2919	9490	7356	3844	9235	7163	3974	8725	6577	4156	8470	6584	4260
	18	25	6403	5212	2434	8198	6283	2692	7674	6130	2936	10000	7871	3870	9660	7614	3974	9150	7028	4182	8810	6970	4286
	19	27	6569	5337	2450	8431	6547	2709	7906	6350	2954	10340	8193	3896	10000	7935	4000	9490	7349	4182	9150	7292	4286
	22	30	7119	5296	2450	9188	6503	2709	8605	6306	2954	11275	8129	3922	10935	7871	4026	10000	7478	4286	9405	7549	4442
	24	32	7505	5296	2466	9712	6503	2725	9071	6306	2971	11955	8129	3922	11530	7871	4052	10340	7607	4364	9575	7742	4546
3.5+3.5+3.5+5.0	12	18	6073	4753	2403	6975	5886	2659	6567	5733	2884	8470	7356	3792	8215	7099	3896	7790	6577	4078	7535	6520	4182
	14	20	6073	4753	2403	7382	5886	2659	6975	5777	2901	8980	7356	3818	8725	7163	3922	8215	6577	4104	7960	6584	4234
	16	22	6073	4962	2419	7790	5886	2676	7324	5777	2919	9490	7356	3844	9235	7163	3974	8725	6577	4156	8470	6584	4260
	18	25	6403	5212	2434	8198	6283	2692	7674	6130	2936	10000	7871	3870	9660	7614	3974	9150	7028	4182	8810	6970	4286
	19	27	6569	5337	2450	8431	6547	2709	7906	6350	2954	10340	8193	3896	10000	7935	4000	9490	7349	4182	9150	7292	4286
	22	30	7119	5296	2450	9188	6503	2709	8605	6306	2954	11275	8129	3922	10935	7871	4026	10000	7478	4286	9405	7549	4442
	24	32	7505	5296	2466	9712	6503	2725	9071	6306	2971	11955	8129	3922	11530	7871	4052	10340	7607	4364	9575	7742	4546
3.5+3.5+3.5+6.0	12	18	6073	4753	2403	6975	5886	2659	6567	5733	2884	8470	7356	3792	8215	7099	3896	7790	6577	4078	7535	6520	4182
	14	20	6073	4753	2403	7382	5886	2659	6975	5777	2901	8980	7356	3818	8725	7163	3922	8215	6577	4104	7960	6584	4234
	16	22	6073	4962	2419	7790	5886	2676	7324	5777	2919	9490	7356	3844	9235	7163	3974	8725	6577	4156	8470	6584	4260
	18	25	6403	5212	2434	8198	6283	2692	7674	6130	2936	10000	7871	3870	9660	7614	3974	9150	7028	4182	8810	6970	4286
	19	27	6569	5337	2450	8431	6547	2709	7906	6350	2954	10340	8193	3896	10000	7935	4000	9490	7349	4182	9150	7292	4286
	22	30	7119	5296	2450	9188	6503	2709	8605	6306	2954	11275	8129	3922	10935	7871	4026	10000	7478	4286	9405	7549	4442
	24	32	7505	5296	2466	9712	6503	2725	9071	6306	2971	11955	8129	3922	11530	7871	4052	10340	7607	4364	9575	7742	4546
3.5+3.5+4.2+4.2	12	18	6073	4753	2403	6975	5886	2659	6567	5733	2884	8470	7356	3792	8215	7099	3896	7790	6577	4078	7535	6520	4182
	14	20	6073	4753	2403	7382	5886	2659	6975	5777	2901	8980	7356	3818	8725	7163	3922	8215	6577	4104	7960	6584	4234
	16	22	6073	4962	2419	7790	5886	2676	7324	5777	2919	9490	7356	3844	9235	7163	3974	8725	6577	4156	8470	6584	4260
	18	25	6403	5212	2434	8198	6283	2692	7674	6130	2936	10000	7871	3870	9660	7614	3974	9150	7028	4182	8810	6970	4286
	19	27	6569	5337	2450	8431	6547	2709	7906	6350	2954	10340	8193	3896	10000	7935	4000	9490	7349	4182	9150	7292	4286
	22	30	7119	5296	2450	9188	6503	2709	8605	6306	2954	11275	8129	3922	10935	7871	4026	10000	7478	4286	9405	7549	4442
	24	32	7505	5296	2466	9712	6503	2725	9071	6306	2971	11955	8129	3922	11530	7871	4052	10340	7607	4364	9575	7742	4546
3.5+3.5+4.2+5.0	12	18	6073	4753	2403	6975	5886	2659	6567	5733	2884	8470	7356	3792	8215	7099	3896	7790	6577	4078	7535	6520	4182
	14	20	6073	4753	2403	7382	5886	2659	6975	5777	2901	8980	7356	3818	8725	7163	3922	8215	6577	4104	7960	6584	4234
	16	22	6073	4962	2419	7790	5886	2676	7324	5777	2919	9490	7356	3844	9235	7163	3974	8725	6577	4156	8470	6584	4260
	18	25	6403	5212	2434	8198	6283	2692	7674	6130	2936	10000	7871	3870	9660	7614	3974	9150	7028	4182	8810	6970	4286
	19	27	6569	5337	2450	8431	6547	2709	7906	6350	2954	10340	8193	3896	10000	7935	4000	9490	7349	4182	9150	7292	4286
	22	30	7119	5296	2450	9188	6503	2709	8605	6306	2954	11275	8129	3922	10935	7871	4026	10000	7478	4286	9405	7549	4442
	24	32	7505	5296	2466	9712	6503	2725	9071	6306	2971	11955	8129	3922	11530	7871	4052	10340	7607	4364	9575	7742	4546
1.5+1.5+1.5+1.5+1.5	12	18	4035	2871	849	4831	4046	1065	4471	3735	1256	6150	5167	2024	5925	4940	2112	5550	4656	2266	5325	4429	2354
	14	20	4035	2871	849	5190	4046	1065	4831	3774	1270	6600	5167	2046	6375	4997	2134	5925	4656	2288	5700	4486	2398
	16	22	4035	3055	862	5550	4046	1079	5139	3774	1285	7050	5167	2068	6825	4997	2178	6375	4656	2332	6150	4486	2420
	18	25	4326	3276	875	5910	4397	1093	5447	4085	1300	7500	5622	2090	7200	5394	2178	6750	5054	2354	6450	4827	2442
	19	27	4472	3386	888	6115	4630	1107	5653	4280	1315	7800	5905	2112	7500	5678	2200	7050	5338	2354	6750	5111	2442
	22	30	4958	3349	888	6783	4591	1107	6269	4241	1315	8625	5849	2134	8325	5622	2222	7500	5451	2442	6975	5338	2574
	24	32	5299	3349	902	7246	4591	1122	6681	4241	1330	9225	5849	2134	8850	5622	2244	7800	5565	2508	7125	5508	2662

	INDOOR		OUTDOOR TEMPERATURE (°CDB)																				
	EWB	EDB	-10			21			27			32			35			40			43		
	°C	°C	TC	SHC	PI	TC	SHC	PI	TC	SHC	PI	TC	SHC	PI	TC	SHC	PI	TC	SHC	PI	TC	SHC	PI
1.5+1.5+1.5+ 1.5+1.8	12	18	4196	2986	880	5024	4208	1104	4650	3885	1301	6396	5374	2098	6162	5138	2189	5772	4843	2348	5538	4606	2440
	14	20	4196	2986	880	5398	4208	1104	5024	3925	1317	6864	5374	2120	6630	5197	2212	6162	4843	2371	5928	4665	2485
	16	22	4196	3177	893	5772	4208	1119	5344	3925	1332	7332	5374	2143	7098	5197	2257	6630	4843	2417	6396	4665	2508
	18	25	4499	3407	907	6146	4572	1133	5665	4249	1347	7800	5846	2166	7488	5610	2257	7020	5256	2440	6708	5020	2531
	19	27	4651	3521	921	6360	4815	1148	5879	4451	1363	8112	6142	2189	7800	5905	2280	7332	5551	2440	7020	5315	2531
	22	30	5157	3483	921	7055	4775	1148	6520	4411	1363	8970	6083	2212	8658	5846	2303	7800	5669	2531	7254	5551	2668
	24	32	5511	3483	935	7536	4775	1162	6948	4411	1378	9594	6083	2212	9204	5846	2326	8112	5787	2599	7410	5728	2759
1.5+1.5+1.5+ 1.5+2.5	12	18	4573	3253	899	5475	4586	1128	5067	4233	1330	6970	5856	2144	6715	5599	2237	6290	5277	2400	6035	5020	2493
	14	20	4573	3253	899	5882	4586	1128	5475	4277	1346	7480	5856	2167	7225	5663	2260	6715	5277	2423	6460	5084	2540
	16	22	4573	3462	913	6290	4586	1143	5824	4277	1361	7990	5856	2190	7735	5663	2307	7225	5277	2470	6970	5084	2563
	18	25	4903	3712	927	6698	4983	1158	6174	4630	1377	8500	6371	2214	8160	6114	2307	7650	5728	2493	7310	5470	2586
	19	27	5069	3837	941	6931	5247	1173	6406	4850	1392	8840	6693	2237	8500	6435	2330	7990	6049	2493	7650	5792	2586
	22	30	5619	3796	941	7688	5203	1173	7105	4806	1392	9775	6629	2260	9435	6371	2353	8500	6178	2586	7905	6049	2726
	24	32	6005	3796	955	8212	5203	1188	7571	4806	1408	10455	6629	2260	10030	6371	2377	8840	6307	2656	8075	6242	2819
1.5+1.5+1.5+ 1.5+3.5	12	18	5073	3653	1099	5975	4986	1328	6067	5033	1720	7970	6656	2534	7715	6399	2627	7290	6077	2790	7035	5820	2883
	14	20	5073	3653	1099	6382	4986	1328	6475	5077	1736	8480	6656	2557	8225	6463	2650	7715	6077	2813	7460	5884	2930
	16	22	5073	3862	1113	6790	4986	1343	6824	5077	1751	8990	6656	2580	8735	6463	2697	8225	6077	2860	7970	5884	2953
	18	25	5403	4112	1127	7198	5383	1358	7174	5430	1767	9500	7171	2604	9160	6914	2697	8650	6528	2883	8310	6270	2976
	19	27	5569	4237	1141	7431	5647	1373	7406	5650	1782	9840	7493	2627	9500	7235	2720	8990	6849	2883	8650	6592	2976
	22	30	6119	4196	1141	8188	5603	1373	8105	5606	1782	10775	7429	2650	10435	7171	2743	9500	6978	2976	8905	6849	3116
	24	32	6505	4196	1155	8712	5603	1388	8571	5606	1798	11455	7429	2650	11030	7171	2767	9840	7107	3046	9075	7042	3209
1.5+1.5+1.5+ 1.5+4.2	12	18	6073	4753	1333	6975	5886	1589	6567	5733	1814	8470	7356	2722	8215	7099	2826	7790	6577	3008	7535	6520	3112
	14	20	6073	4753	1333	7382	5886	1589	6975	5777	1831	8980	7356	2748	8725	7163	2852	8215	6577	3034	7960	6584	3164
	16	22	6073	4962	1349	7790	5886	1606	7324	5777	1849	9490	7356	2774	9235	7163	2904	8725	6577	3086	8470	6584	3190
	18	25	6403	5212	1364	8198	6283	1622	7674	6130	1866	10000	7871	2800	9660	7614	2904	9150	7028	3112	8810	6970	3216
	19	27	6569	5337	1380	8431	6547	1639	7906	6350	1884	10340	8193	2826	10000	7935	2930	9490	7349	3112	9150	7292	3216
	22	30	7119	5296	1380	9188	6503	1639	8605	6306	1884	11275	8129	2852	10935	7871	2956	10000	7478	3216	9405	7549	3372
	24	32	7505	5296	1396	9712	6503	1655	9071	6306	1901	11955	8129	2852	11530	7871	2982	10340	7607	3294	9575	7742	3476
1.5+1.5+1.5+ 1.5+5.0	12	18	6073	4753	1403	6975	5886	1659	6567	5733	1884	8470	7356	2792	8215	7099	2896	7790	6577	3078	7535	6520	3182
	14	20	6073	4753	1403	7382	5886	1659	6975	5777	1901	8980	7356	2818	8725	7163	2922	8215	6577	3104	7960	6584	3234
	16	22	6073	4962	1419	7790	5886	1676	7324	5777	1919	9490	7356	2844	9235	7163	2974	8725	6577	3156	8470	6584	3260
	18	25	6403	5212	1434	8198	6283	1692	7674	6130	1936	10000	7871	2870	9660	7614	2974	9150	7028	3182	8810	6970	3286
	19	27	6569	5337	1450	8431	6547	1709	7906	6350	1954	10340	8193	2896	10000	7935	3000	9490	7349	3182	9150	7292	3286
	22	30	7119	5296	1450	9188	6503	1709	8605	6306	1954	11275	8129	2922	10935	7871	3026	10000	7478	3286	9405	7549	3442
	24	32	7505	5296	1466	9712	6503	1725	9071	6306	1971	11955	8129	2922	11530	7871	3052	10340	7607	3364	9575	7742	3546
1.5+1.5+1.5+ 1.5+6.0	12	18	6073	4753	1403	6975	5886	1659	6567	5733	1884	8470	7356	2792	8215	7099	2896	7790	6577	3078	7535	6520	3182
	14	20	6073	4753	1403	7382	5886	1659	6975	5777	1901	8980	7356	2818	8725	7163	2922	8215	6577	3104	7960	6584	3234
	16	22	6073	4962	1419	7790	5886	1676	7324	5777	1919	9490	7356	2844	9235	7163	2974	8725	6577	3156	8470	6584	3260
	18	25	6403	5212	1434	8198	6283	1692	7674	6130	1936	10000	7871	2870	9660	7614	2974	9150	7028	3182	8810	6970	3286
	19	27	6569	5337	1450	8431	6547	1709	7906	6350	1954	10340	8193	2896	10000	7935	3000	9490	7349	3182	9150	7292	3286
	22	30	7119	5296	1450	9188	6503	1709	8605	6306	1954	11275	8129	2922	10935	7871	3026	10000	7478	3286	9405	7549	3442
	24	32	7505	5296	1466	9712	6503	1725	9071	6306	1971	11955	8129	2922	11530	7871	3052	10340	7607	3364	9575	7742	3546

	INDOOR		OUTDOOR TEMPERATURE (°CDB)																				
	EWB	EDB	-10			21			27			32			35			40			43		
	°C	°C	TC	SHC	PI	TC	SHC	PI	TC	SHC	PI	TC	SHC	PI	TC	SHC	PI	TC	SHC	PI	TC	SHC	PI
1.5+1.5+1.5+1.8+1.8	12	18	4358	3100	829	5217	4370	1041	4829	4034	1227	6642	5581	1978	6399	5335	2064	5994	5029	2215	5751	4783	2301
	14	20	4358	3100	829	5606	4370	1041	5217	4076	1242	7128	5581	2000	6885	5397	2086	6399	5029	2236	6156	4845	2344
	16	22	4358	3299	842	5994	4370	1055	5550	4076	1256	7614	5581	2021	7371	5397	2129	6885	5029	2279	6642	4845	2365
	18	25	4673	3538	855	6383	4748	1069	5883	4412	1270	8100	6071	2043	7776	5826	2129	7290	5458	2301	6966	5213	2387
	19	27	4830	3657	868	6605	5000	1082	6105	4622	1285	8424	6378	2064	8100	6133	2150	7614	5765	2301	7290	5519	2387
	22	30	5355	3617	868	7326	4958	1082	6771	4580	1285	9315	6317	2086	8991	6071	2172	8100	5887	2387	7533	5765	2516
	24	32	5723	3617	881	7826	4958	1096	7215	4580	1299	9963	6317	2086	9558	6071	2193	8424	6010	2451	7695	5949	2602
1.5+1.5+1.5+1.8+2.5	12	18	4873	3553	849	5775	4886	1065	5367	4533	1256	7270	6156	2024	7015	5899	2112	6590	5577	2266	6335	5320	2354
	14	20	4873	3553	849	6182	4886	1065	5775	4577	1270	7780	6156	2046	7525	5963	2134	7015	5577	2288	6760	5384	2398
	16	22	4873	3762	862	6590	4886	1079	6124	4577	1285	8290	6156	2068	8035	5963	2178	7525	5577	2332	7270	5384	2420
	18	25	5203	4012	875	6998	5283	1093	6474	4930	1300	8800	6671	2090	8460	6414	2178	7950	6028	2354	7610	5770	2442
	19	27	5369	4137	888	7231	5547	1107	6706	5150	1315	9140	6993	2112	8800	6735	2200	8290	6349	2354	7950	6092	2442
	22	30	5919	4096	888	7988	5503	1107	7405	5106	1315	10075	6929	2134	9735	6671	2222	8800	6478	2442	8205	6349	2574
	24	32	6305	4096	902	8512	5503	1122	7871	5106	1330	10755	6929	2134	10330	6671	2244	9140	6607	2508	8375	6542	2662
1.5+1.5+1.5+1.8+3.5	12	18	5173	3653	1011	6775	5586	1269	6367	5233	1495	8270	6856	2410	8015	6599	2515	7590	6277	2699	7335	6020	2803
	14	20	5173	3653	1011	7182	5586	1269	6775	5277	1513	8780	6856	2437	8525	6663	2541	8015	6277	2725	7760	6084	2856
	16	22	5173	3862	1027	7590	5586	1286	7124	5277	1531	9290	6856	2463	9035	6663	2594	8525	6277	2777	8270	6084	2882
	18	25	5503	4112	1042	7998	5983	1302	7474	5630	1548	9800	7371	2489	9460	7114	2594	8950	6728	2803	8610	6470	2908
	19	27	5669	4237	1058	8231	6247	1319	7706	5850	1566	10140	7693	2515	9800	7435	2620	9290	7049	2803	8950	6792	2908
	22	30	6219	4196	1058	8988	6203	1319	8405	5806	1566	11075	7629	2541	10735	7371	2646	9800	7178	2908	9205	7049	3065
	24	32	6605	4196	1074	9512	6203	1336	8871	5806	1583	11755	7629	2541	11330	7371	2672	10140	7307	2987	9375	7242	3170
1.5+1.5+1.5+1.8+4.2	12	18	5373	3853	1011	6975	5786	1269	6567	5433	1495	8470	7056	2410	8215	6799	2515	7790	6477	2699	7535	6220	2803
	14	20	5373	3853	1011	7382	5786	1269	6975	5477	1513	8980	7056	2437	8725	6863	2541	8215	6477	2725	7960	6284	2856
	16	22	5373	4062	1027	7790	5786	1286	7324	5477	1531	9490	7056	2463	9235	6863	2594	8725	6477	2777	8470	6284	2882
	18	25	5703	4312	1042	8198	6183	1302	7674	5830	1548	10000	7571	2489	9660	7314	2594	9150	6928	2803	8810	6670	2908
	19	27	5869	4437	1058	8431	6447	1319	7906	6050	1566	10340	7893	2515	10000	7635	2620	9490	7249	2803	9150	6992	2908
	22	30	6419	4396	1058	9188	6403	1319	8605	6006	1566	11275	7829	2541	10935	7571	2646	10000	7378	2908	9405	7249	3065
	24	32	6805	4396	1074	9712	6403	1336	9071	6006	1583	11955	7829	2541	11530	7571	2672	10340	7507	2987	9575	7442	3170
1.5+1.5+1.5+1.8+5.0	12	18	6073	4753	1403	6975	5886	1659	6567	5733	1884	8470	7356	2792	8215	7099	2896	7790	6577	3078	7535	6520	3182
	14	20	6073	4753	1403	7382	5886	1659	6975	5777	1901	8980	7356	2818	8725	7163	2922	8215	6577	3104	7960	6584	3234
	16	22	6073	4962	1419	7790	5886	1676	7324	5777	1919	9490	7356	2844	9235	7163	2974	8725	6577	3156	8470	6584	3260
	18	25	6403	5212	1434	8198	6283	1692	7674	6130	1936	10000	7871	2870	9660	7614	2974	9150	7028	3182	8810	6970	3286
	19	27	6569	5337	1450	8431	6547	1709	7906	6350	1954	10340	8193	2896	10000	7935	3000	9490	7349	3182	9150	7292	3286
	22	30	7119	5296	1450	9188	6503	1709	8605	6306	1954	11275	8129	2922	10935	7871	3026	10000	7478	3286	9405	7549	3442
	24	32	7505	5296	1466	9712	6503	1725	9071	6306	1971	11955	8129	2922	11530	7871	3052	10340	7607	3364	9575	7742	3546
1.5+1.5+1.5+1.8+6.0	12	18	6073	4753	1403	6975	5886	1659	6567	5733	1884	8470	7356	2792	8215	7099	2896	7790	6577	3078	7535	6520	3182
	14	20	6073	4753	1403	7382	5886	1659	6975	5777	1901	8980	7356	2818	8725	7163	2922	8215	6577	3104	7960	6584	3234
	16	22	6073	4962	1419	7790	5886	1676	7324	5777	1919	9490	7356	2844	9235	7163	2974	8725	6577	3156	8470	6584	3260
	18	25	6403	5212	1434	8198	6283	1692	7674	6130	1936	10000	7871	2870	9660	7614	2974	9150	7028	3182	8810	6970	3286
	19	27	6569	5337	1450	8431	6547	1709	7906	6350	1954	10340	8193	2896	10000	7935	3000	9490	7349	3182	9150	7292	3286
	22	30	7119	5296	1450	9188	6503	1709	8605	6306	1954	11275	8129	2922	10935	7871	3026	10000	7478	3286	9405	7549	3442
	24	32	7505	5296	1466	9712	6503	1725	9071	6306	1971	11955	8129	2922	11530	7871	3052	10340	7607	3364	9575	7742	3546

	INDOOR		OUTDOOR TEMPERATURE (°CDB)																				
	EWB	EDB	-10			21			27			32			35			40			43		
	°C	°C	TC	SHC	PI	TC	SHC	PI	TC	SHC	PI	TC	SHC	PI	TC	SHC	PI	TC	SHC	PI	TC	SHC	PI
1.5+1.5+1.5+ 2.5+2.5	12	18	5573	4353	1403	6475	5486	1659	6067	5333	1884	7970	6956	2792	7715	6699	2896	7290	6177	3078	7035	6120	3182
	14	20	5573	4353	1403	6882	5486	1659	6475	5377	1901	8480	6956	2818	8225	6763	2922	7715	6177	3104	7460	6184	3234
	16	22	5573	4562	1419	7290	5486	1676	6824	5377	1919	8990	6956	2844	8735	6763	2974	8225	6177	3156	7970	6184	3260
	18	25	5903	4812	1434	7698	5883	1692	7174	5730	1936	9500	7471	2870	9160	7214	2974	8650	6628	3182	8310	6570	3286
	19	27	6069	4937	1450	7931	6147	1709	7406	5950	1954	9840	7793	2896	9500	7535	3000	8990	6949	3182	8650	6892	3286
	22	30	6619	4896	1450	8688	6103	1709	8105	5906	1954	10775	7729	2922	10435	7471	3026	9500	7078	3286	8905	7149	3442
	24	32	7005	4896	1466	9212	6103	1725	8571	5906	1971	11455	7729	2922	11030	7471	3052	9840	7207	3364	9075	7342	3546
1.5+1.5+1.5+ 2.5+3.5	12	18	6073	4753	1403	6975	5886	1659	6567	5733	1884	8470	7356	2792	8215	7099	2896	7790	6577	3078	7535	6520	3182
	14	20	6073	4753	1403	7382	5886	1659	6975	5777	1901	8980	7356	2818	8725	7163	2922	8215	6577	3104	7960	6584	3234
	16	22	6073	4962	1419	7790	5886	1676	7324	5777	1919	9490	7356	2844	9235	7163	2974	8725	6577	3156	8470	6584	3260
	18	25	6403	5212	1434	8198	6283	1692	7674	6130	1936	10000	7871	2870	9660	7614	2974	9150	7028	3182	8810	6970	3286
	19	27	6569	5337	1450	8431	6547	1709	7906	6350	1954	10340	8193	2896	10000	7935	3000	9490	7349	3182	9150	7292	3286
	22	30	7119	5296	1450	9188	6503	1709	8605	6306	1954	11275	8129	2922	10935	7871	3026	10000	7478	3286	9405	7549	3442
	24	32	7505	5296	1466	9712	6503	1725	9071	6306	1971	11955	8129	2922	11530	7871	3052	10340	7607	3364	9575	7742	3546
1.5+1.5+1.5+ 2.5+4.2	12	18	6073	4753	1403	6975	5886	1659	6567	5733	1884	8470	7356	2792	8215	7099	2896	7790	6577	3078	7535	6520	3182
	14	20	6073	4753	1403	7382	5886	1659	6975	5777	1901	8980	7356	2818	8725	7163	2922	8215	6577	3104	7960	6584	3234
	16	22	6073	4962	1419	7790	5886	1676	7324	5777	1919	9490	7356	2844	9235	7163	2974	8725	6577	3156	8470	6584	3260
	18	25	6403	5212	1434	8198	6283	1692	7674	6130	1936	10000	7871	2870	9660	7614	2974	9150	7028	3182	8810	6970	3286
	19	27	6569	5337	1450	8431	6547	1709	7906	6350	1954	10340	8193	2896	10000	7935	3000	9490	7349	3182	9150	7292	3286
	22	30	7119	5296	1450	9188	6503	1709	8605	6306	1954	11275	8129	2922	10935	7871	3026	10000	7478	3286	9405	7549	3442
	24	32	7505	5296	1466	9712	6503	1725	9071	6306	1971	11955	8129	2922	11530	7871	3052	10340	7607	3364	9575	7742	3546
1.5+1.5+1.5+ 2.5+5.0	12	18	6073	4753	1903	6975	5886	2159	6567	5733	2384	8470	7356	3292	8215	7099	3396	7790	6577	3578	7535	6520	3682
	14	20	6073	4753	1903	7382	5886	2159	6975	5777	2401	8980	7356	3318	8725	7163	3422	8215	6577	3604	7960	6584	3734
	16	22	6073	4962	1919	7790	5886	2176	7324	5777	2419	9490	7356	3344	9235	7163	3474	8725	6577	3656	8470	6584	3760
	18	25	6403	5212	1934	8198	6283	2192	7674	6130	2436	10000	7871	3370	9660	7614	3474	9150	7028	3682	8810	6970	3786
	19	27	6569	5337	1950	8431	6547	2209	7906	6350	2454	10340	8193	3396	10000	7935	3500	9490	7349	3682	9150	7292	3786
	22	30	7119	5296	1950	9188	6503	2209	8605	6306	2454	11275	8129	3422	10935	7871	3526	10000	7478	3786	9405	7549	3942
	24	32	7505	5296	1966	9712	6503	2225	9071	6306	2471	11955	8129	3422	11530	7871	3552	10340	7607	3864	9575	7742	4046
1.5+1.5+1.5+ 2.5+6.0	12	18	6073	4753	1903	6975	5886	2159	6567	5733	2384	8470	7356	3292	8215	7099	3396	7790	6577	3578	7535	6520	3682
	14	20	6073	4753	1903	7382	5886	2159	6975	5777	2401	8980	7356	3318	8725	7163	3422	8215	6577	3604	7960	6584	3734
	16	22	6073	4962	1919	7790	5886	2176	7324	5777	2419	9490	7356	3344	9235	7163	3474	8725	6577	3656	8470	6584	3760
	18	25	6403	5212	1934	8198	6283	2192	7674	6130	2436	10000	7871	3370	9660	7614	3474	9150	7028	3682	8810	6970	3786
	19	27	6569	5337	1950	8431	6547	2209	7906	6350	2454	10340	8193	3396	10000	7935	3500	9490	7349	3682	9150	7292	3786
	22	30	7119	5296	1950	9188	6503	2209	8605	6306	2454	11275	8129	3422	10935	7871	3526	10000	7478	3786	9405	7549	3942
	24	32	7505	5296	1966	9712	6503	2225	9071	6306	2471	11955	8129	3422	11530	7871	3552	10340	7607	3864	9575	7742	4046
1.5+1.5+1.5+ 3.5+3.5	12	18	6073	4753	1903	6975	5886	2159	6567	5733	2384	8470	7356	3292	8215	7099	3396	7790	6577	3578	7535	6520	3682
	14	20	6073	4753	1903	7382	5886	2159	6975	5777	2401	8980	7356	3318	8725	7163	3422	8215	6577	3604	7960	6584	3734
	16	22	6073	4962	1919	7790	5886	2176	7324	5777	2419	9490	7356	3344	9235	7163	3474	8725	6577	3656	8470	6584	3760
	18	25	6403	5212	1934	8198	6283	2192	7674	6130	2436	10000	7871	3370	9660	7614	3474	9150	7028	3682	8810	6970	3786
	19	27	6569	5337	1950	8431	6547	2209	7906	6350	2454	10340	8193	3396	10000	7935	3500	9490	7349	3682	9150	7292	3786
	22	30	7119	5296	1950	9188	6503	2209	8605	6306	2454	11275	8129	3422	10935	7871	3526	10000	7478	3786	9405	7549	3942
	24	32	7505	5296	1966	9712	6503	2225	9071	6306	2471	11955	8129	3422	11530	7871	3552	10340	7607	3864	9575	7742	4046

	INDOOR		OUTDOOR TEMPERATURE (°CDB)																				
	EWB	EDB	-10			21			27			32			35			40			43		
	°C	°C	TC	SHC	PI	TC	SHC	PI	TC	SHC	PI	TC	SHC	PI	TC	SHC	PI	TC	SHC	PI	TC	SHC	PI
1.5+1.5+1.5+ 3.5+4.2	12	18	6073	4753	1903	6975	5886	2159	6567	5733	2384	8470	7356	3292	8215	7099	3396	7790	6577	3578	7535	6520	3682
	14	20	6073	4753	1903	7382	5886	2159	6975	5777	2401	8980	7356	3318	8725	7163	3422	8215	6577	3604	7960	6584	3734
	16	22	6073	4962	1919	7790	5886	2176	7324	5777	2419	9490	7356	3344	9235	7163	3474	8725	6577	3656	8470	6584	3760
	18	25	6403	5212	1934	8198	6283	2192	7674	6130	2436	10000	7871	3370	9660	7614	3474	9150	7028	3682	8810	6970	3786
	19	27	6569	5337	1950	8431	6547	2209	7906	6350	2454	10340	8193	3396	10000	7935	3500	9490	7349	3682	9150	7292	3786
	22	30	7119	5296	1950	9188	6503	2209	8605	6306	2454	11275	8129	3422	10935	7871	3526	10000	7478	3786	9405	7549	3942
	24	32	7505	5296	1966	9712	6503	2225	9071	6306	2471	11955	8129	3422	11530	7871	3552	10340	7607	3864	9575	7742	4046
1.5+1.5+1.5+ 3.5+5.0	12	18	6073	4753	2403	6975	5886	2659	6567	5733	2884	8470	7356	3792	8215	7099	3896	7790	6577	4078	7535	6520	4182
	14	20	6073	4753	2403	7382	5886	2659	6975	5777	2901	8980	7356	3818	8725	7163	3922	8215	6577	4104	7960	6584	4234
	16	22	6073	4962	2419	7790	5886	2676	7324	5777	2919	9490	7356	3844	9235	7163	3974	8725	6577	4156	8470	6584	4260
	18	25	6403	5212	2434	8198	6283	2692	7674	6130	2936	10000	7871	3870	9660	7614	3974	9150	7028	4182	8810	6970	4286
	19	27	6569	5337	2450	8431	6547	2709	7906	6350	2954	10340	8193	3896	10000	7935	4000	9490	7349	4182	9150	7292	4286
	22	30	7119	5296	2450	9188	6503	2709	8605	6306	2954	11275	8129	3922	10935	7871	4026	10000	7478	4286	9405	7549	4442
	24	32	7505	5296	2466	9712	6503	2725	9071	6306	2971	11955	8129	3922	11530	7871	4052	10340	7607	4364	9575	7742	4546
1.5+1.5+1.5+ 3.5+6.0	12	18	6073	4753	2403	6975	5886	2659	6567	5733	2884	8470	7356	3792	8215	7099	3896	7790	6577	4078	7535	6520	4182
	14	20	6073	4753	2403	7382	5886	2659	6975	5777	2901	8980	7356	3818	8725	7163	3922	8215	6577	4104	7960	6584	4234
	16	22	6073	4962	2419	7790	5886	2676	7324	5777	2919	9490	7356	3844	9235	7163	3974	8725	6577	4156	8470	6584	4260
	18	25	6403	5212	2434	8198	6283	2692	7674	6130	2936	10000	7871	3870	9660	7614	3974	9150	7028	4182	8810	6970	4286
	19	27	6569	5337	2450	8431	6547	2709	7906	6350	2954	10340	8193	3896	10000	7935	4000	9490	7349	4182	9150	7292	4286
	22	30	7119	5296	2450	9188	6503	2709	8605	6306	2954	11275	8129	3922	10935	7871	4026	10000	7478	4286	9405	7549	4442
	24	32	7505	5296	2466	9712	6503	2725	9071	6306	2971	11955	8129	3922	11530	7871	4052	10340	7607	4364	9575	7742	4546
1.5+1.5+1.5+ 4.2+4.2	12	18	6073	4753	2403	6975	5886	2659	6567	5733	2884	8470	7356	3792	8215	7099	3896	7790	6577	4078	7535	6520	4182
	14	20	6073	4753	2403	7382	5886	2659	6975	5777	2901	8980	7356	3818	8725	7163	3922	8215	6577	4104	7960	6584	4234
	16	22	6073	4962	2419	7790	5886	2676	7324	5777	2919	9490	7356	3844	9235	7163	3974	8725	6577	4156	8470	6584	4260
	18	25	6403	5212	2434	8198	6283	2692	7674	6130	2936	10000	7871	3870	9660	7614	3974	9150	7028	4182	8810	6970	4286
	19	27	6569	5337	2450	8431	6547	2709	7906	6350	2954	10340	8193	3896	10000	7935	4000	9490	7349	4182	9150	7292	4286
	22	30	7119	5296	2450	9188	6503	2709	8605	6306	2954	11275	8129	3922	10935	7871	4026	10000	7478	4286	9405	7549	4442
	24	32	7505	5296	2466	9712	6503	2725	9071	6306	2971	11955	8129	3922	11530	7871	4052	10340	7607	4364	9575	7742	4546
1.5+1.5+1.5+ 4.2+5.0	12	18	6073	4753	2403	6975	5886	2659	6567	5733	2884	8470	7356	3792	8215	7099	3896	7790	6577	4078	7535	6520	4182
	14	20	6073	4753	2403	7382	5886	2659	6975	5777	2901	8980	7356	3818	8725	7163	3922	8215	6577	4104	7960	6584	4234
	16	22	6073	4962	2419	7790	5886	2676	7324	5777	2919	9490	7356	3844	9235	7163	3974	8725	6577	4156	8470	6584	4260
	18	25	6403	5212	2434	8198	6283	2692	7674	6130	2936	10000	7871	3870	9660	7614	3974	9150	7028	4182	8810	6970	4286
	19	27	6569	5337	2450	8431	6547	2709	7906	6350	2954	10340	8193	3896	10000	7935	4000	9490	7349	4182	9150	7292	4286
	22	30	7119	5296	2450	9188	6503	2709	8605	6306	2954	11275	8129	3922	10935	7871	4026	10000	7478	4286	9405	7549	4442
	24	32	7505	5296	2466	9712	6503	2725	9071	6306	2971	11955	8129	3922	11530	7871	4052	10340	7607	4364	9575	7742	4546
1.5+1.5+1.5+ 4.2+6.0	12	18	6073	4753	2403	6975	5886	2659	6567	5733	2884	8470	7356	3792	8215	7099	3896	7790	6577	4078	7535	6520	4182
	14	20	6073	4753	2403	7382	5886	2659	6975	5777	2901	8980	7356	3818	8725	7163	3922	8215	6577	4104	7960	6584	4234
	16	22	6073	4962	2419	7790	5886	2676	7324	5777	2919	9490	7356	3844	9235	7163	3974	8725	6577	4156	8470	6584	4260
	18	25	6403	5212	2434	8198	6283	2692	7674	6130	2936	10000	7871	3870	9660	7614	3974	9150	7028	4182	8810	6970	4286
	19	27	6569	5337	2450	8431	6547	2709	7906	6350	2954	10340	8193	3896	10000	7935	4000	9490	7349	4182	9150	7292	4286
	22	30	7119	5296	2450	9188	6503	2709	8605	6306	2954	11275	8129	3922	10935	7871	4026	10000	7478	4286	9405	7549	4442
	24	32	7505	5296	2466	9712	6503	2725	9071	6306	2971	11955	8129	3922	11530	7871	4052	10340	7607	4364	9575	7742	4546

	INDOOR		OUTDOOR TEMPERATURE (°CDB)																				
	EWB	EDB	-10			21			27			32			35			40			43		
	°C	°C	TC	SHC	PI	TC	SHC	PI	TC	SHC	PI	TC	SHC	PI	TC	SHC	PI	TC	SHC	PI	TC	SHC	PI
1.5+1.5+1.5+ 5.0+5.0	12	18	6073	4753	2403	6975	5886	2659	6567	5733	2884	8470	7356	3792	8215	7099	3896	7790	6577	4078	7535	6520	4182
	14	20	6073	4753	2403	7382	5886	2659	6975	5777	2901	8980	7356	3818	8725	7163	3922	8215	6577	4104	7960	6584	4234
	16	22	6073	4962	2419	7790	5886	2676	7324	5777	2919	9490	7356	3844	9235	7163	3974	8725	6577	4156	8470	6584	4260
	18	25	6403	5212	2434	8198	6283	2692	7674	6130	2936	10000	7871	3870	9660	7614	3974	9150	7028	4182	8810	6970	4286
	19	27	6569	5337	2450	8431	6547	2709	7906	6350	2954	10340	8193	3896	10000	7935	4000	9490	7349	4182	9150	7292	4286
	22	30	7119	5296	2450	9188	6503	2709	8605	6306	2954	11275	8129	3922	10935	7871	4026	10000	7478	4286	9405	7549	4442
	24	32	7505	5296	2466	9712	6503	2725	9071	6306	2971	11955	8129	3922	11530	7871	4052	10340	7607	4364	9575	7742	4546
1.5+1.5+1.5+ 5.0+6.0	12	18	6073	4753	2403	6975	5886	2659	6567	5733	2884	8470	7356	3792	8215	7099	3896	7790	6577	4078	7535	6520	4182
	14	20	6073	4753	2403	7382	5886	2659	6975	5777	2901	8980	7356	3818	8725	7163	3922	8215	6577	4104	7960	6584	4234
	16	22	6073	4962	2419	7790	5886	2676	7324	5777	2919	9490	7356	3844	9235	7163	3974	8725	6577	4156	8470	6584	4260
	18	25	6403	5212	2434	8198	6283	2692	7674	6130	2936	10000	7871	3870	9660	7614	3974	9150	7028	4182	8810	6970	4286
	19	27	6569	5337	2450	8431	6547	2709	7906	6350	2954	10340	8193	3896	10000	7935	4000	9490	7349	4182	9150	7292	4286
	22	30	7119	5296	2450	9188	6503	2709	8605	6306	2954	11275	8129	3922	10935	7871	4026	10000	7478	4286	9405	7549	4442
	24	32	7505	5296	2466	9712	6503	2725	9071	6306	2971	11955	8129	3922	11530	7871	4052	10340	7607	4364	9575	7742	4546
1.5+1.5+1.8+ 1.8+1.8	12	18	4519	3215	841	5410	4532	1056	5007	4183	1244	6888	5787	2006	6636	5533	2093	6216	5215	2245	5964	4961	2333
	14	20	4519	3215	841	5813	4532	1056	5410	4227	1259	7392	5787	2027	7140	5597	2115	6636	5215	2267	6384	5024	2376
	16	22	4519	3421	854	6216	4532	1070	5756	4227	1274	7896	5787	2049	7644	5597	2158	7140	5215	2311	6888	5024	2398
	18	25	4846	3669	867	6619	4924	1084	6101	4575	1288	8400	6296	2071	8064	6042	2158	7560	5660	2333	7224	5406	2420
	19	27	5009	3792	880	6849	5186	1097	6331	4793	1303	8736	6614	2093	8400	6360	2180	7896	5978	2333	7560	5724	2420
	22	30	5553	3751	880	7597	5142	1097	7022	4750	1303	9660	6551	2115	9324	6296	2202	8400	6105	2420	7812	5978	2551
	24	32	5934	3751	894	8115	5142	1111	7482	4750	1317	10332	6551	2115	9912	6296	2224	8736	6233	2485	7980	6169	2638
1.5+1.5+1.8+ 1.8+2.5	12	18	5173	3753	961	6075	5086	1206	5667	4733	1421	7570	6356	2291	7315	6099	2390	6890	5777	2565	6635	5520	2664
	14	20	5173	3753	961	6482	5086	1206	6075	4777	1438	8080	6356	2316	7825	6163	2415	7315	5777	2590	7060	5584	2714
	16	22	5173	3962	976	6890	5086	1222	6424	4777	1455	8590	6356	2341	8335	6163	2465	7825	5777	2639	7570	5584	2739
	18	25	5503	4212	991	7298	5483	1238	6774	5130	1471	9100	6871	2366	8760	6614	2465	8250	6228	2664	7910	5970	2764
	19	27	5669	4337	1006	7531	5747	1253	7006	5350	1488	9440	7193	2390	9100	6935	2490	8590	6549	2664	8250	6292	2764
	22	30	6219	4296	1006	8288	5703	1253	7705	5306	1488	10375	7129	2415	10035	6871	2515	9100	6678	2764	8505	6549	2913
	24	32	6605	4296	1021	8812	5703	1269	8171	5306	1505	11055	7129	2415	10630	6871	2540	9440	6807	2839	8675	6742	3013
1.5+1.5+1.8+ 1.8+3.5	12	18	5573	4053	1038	6975	5886	1303	6567	5533	1535	8470	7156	2475	8215	6899	2582	7790	6577	2771	7535	6320	2878
	14	20	5573	4053	1038	7382	5886	1303	6975	5577	1553	8980	7156	2502	8725	6963	2609	8215	6577	2798	7960	6384	2932
	16	22	5573	4262	1054	7790	5886	1320	7324	5577	1571	9490	7156	2529	9235	6963	2663	8725	6577	2851	8470	6384	2959
	18	25	5903	4512	1070	8198	6283	1337	7674	5930	1590	10000	7671	2556	9660	7414	2663	9150	7028	2878	8810	6770	2986
	19	27	6069	4637	1086	8431	6547	1354	7906	6150	1608	10340	7993	2582	10000	7735	2690	9490	7349	2878	9150	7092	2986
	22	30	6619	4596	1086	9188	6503	1354	8605	6106	1608	11275	7929	2609	10935	7671	2717	10000	7478	2986	9405	7349	3147
	24	32	7005	4596	1103	9712	6503	1371	9071	6106	1626	11955	7929	2609	11530	7671	2744	10340	7607	3067	9575	7542	3255
1.5+1.5+1.8+ 1.8+4.2	12	18	5573	4053	1038	6975	5886	1303	6567	5533	1535	8470	7156	2475	8215	6899	2582	7790	6577	2771	7535	6320	2878
	14	20	5573	4053	1038	7382	5886	1303	6975	5577	1553	8980	7156	2502	8725	6963	2609	8215	6577	2798	7960	6384	2932
	16	22	5573	4262	1054	7790	5886	1320	7324	5577	1571	9490	7156	2529	9235	6963	2663	8725	6577	2851	8470	6384	2959
	18	25	5903	4512	1070	8198	6283	1337	7674	5930	1590	10000	7671	2556	9660	7414	2663	9150	7028	2878	8810	6770	2986
	19	27	6069	4637	1086	8431	6547	1354	7906	6150	1608	10340	7993	2582	10000	7735	2690	9490	7349	2878	9150	7092	2986
	22	30	6619	4596	1086	9188	6503	1354	8605	6106	1608	11275	7929	2609	10935	7671	2717	10000	7478	2986	9405	7349	3147
	24	32	7005	4596	1103	9712	6503	1371	9071	6106	1626	11955	7929	2609	11530	7671	2744	10340	7607	3067	9575	7542	3255

	INDOOR		OUTDOOR TEMPERATURE (°CDB)																				
	EWB	EDB	-10			21			27			32			35			40			43		
	°C	°C	TC	SHC	PI	TC	SHC	PI	TC	SHC	PI	TC	SHC	PI	TC	SHC	PI	TC	SHC	PI	TC	SHC	PI
1.5+1.5+1.8+ 1.8+5.0	12	18	6073	4753	1403	6975	5886	1659	6567	5733	1884	8470	7356	2792	8215	7099	2896	7790	6577	3078	7535	6520	3182
	14	20	6073	4753	1403	7382	5886	1659	6975	5777	1901	8980	7356	2818	8725	7163	2922	8215	6577	3104	7960	6584	3234
	16	22	6073	4962	1419	7790	5886	1676	7324	5777	1919	9490	7356	2844	9235	7163	2974	8725	6577	3156	8470	6584	3260
	18	25	6403	5212	1434	8198	6283	1692	7674	6130	1936	10000	7871	2870	9660	7614	2974	9150	7028	3182	8810	6970	3286
	19	27	6569	5337	1450	8431	6547	1709	7906	6350	1954	10340	8193	2896	10000	7935	3000	9490	7349	3182	9150	7292	3286
	22	30	7119	5296	1450	9188	6503	1709	8605	6306	1954	11275	8129	2922	10935	7871	3026	10000	7478	3286	9405	7549	3442
	24	32	7505	5296	1466	9712	6503	1725	9071	6306	1971	11955	8129	2922	11530	7871	3052	10340	7607	3364	9575	7742	3546
1.5+1.5+1.8+ 1.8+6.0	12	18	6073	4753	1403	6975	5886	1659	6567	5733	1884	8470	7356	2792	8215	7099	2896	7790	6577	3078	7535	6520	3182
	14	20	6073	4753	1403	7382	5886	1659	6975	5777	1901	8980	7356	2818	8725	7163	2922	8215	6577	3104	7960	6584	3234
	16	22	6073	4962	1419	7790	5886	1676	7324	5777	1919	9490	7356	2844	9235	7163	2974	8725	6577	3156	8470	6584	3260
	18	25	6403	5212	1434	8198	6283	1692	7674	6130	1936	10000	7871	2870	9660	7614	2974	9150	7028	3182	8810	6970	3286
	19	27	6569	5337	1450	8431	6547	1709	7906	6350	1954	10340	8193	2896	10000	7935	3000	9490	7349	3182	9150	7292	3286
	22	30	7119	5296	1450	9188	6503	1709	8605	6306	1954	11275	8129	2922	10935	7871	3026	10000	7478	3286	9405	7549	3442
	24	32	7505	5296	1466	9712	6503	1725	9071	6306	1971	11955	8129	2922	11530	7871	3052	10340	7607	3364	9575	7742	3546
1.5+1.5+1.8+ 2.5+2.5	12	18	5373	3853	1038	6775	6086	1303	6367	5333	1535	8270	6956	2475	8015	6699	2582	7590	6777	2771	7335	6120	2878
	14	20	5373	3853	1038	7182	6086	1303	6775	5377	1553	8780	6956	2502	8525	6763	2609	8015	6777	2798	7760	6184	2932
	16	22	5373	4062	1054	7590	6086	1320	7124	5377	1571	9290	6956	2529	9035	6763	2663	8525	6777	2851	8270	6184	2959
	18	25	5703	4312	1070	7998	6483	1337	7474	5730	1590	9800	7471	2556	9460	7214	2663	8950	7228	2878	8610	6570	2986
	19	27	5869	4437	1086	8231	6747	1354	7706	5950	1608	10140	7793	2582	9800	7535	2690	9290	7549	2878	8950	6892	2986
	22	30	6419	4396	1086	8988	6703	1354	8405	5906	1608	11075	7729	2609	10735	7471	2717	9800	7678	2986	9205	7149	3147
	24	32	6805	4396	1103	9512	6703	1371	8871	5906	1626	11755	7729	2609	11330	7471	2744	10140	7807	3067	9375	7342	3255
1.5+1.5+1.8+ 2.5+3.5	12	18	5573	4053	1038	6975	5886	1303	6567	5533	1535	8470	7156	2475	8215	6899	2582	7790	6577	2771	7535	6320	2878
	14	20	5573	4053	1038	7382	5886	1303	6975	5577	1553	8980	7156	2502	8725	6963	2609	8215	6577	2798	7960	6384	2932
	16	22	5573	4262	1054	7790	5886	1320	7324	5577	1571	9490	7156	2529	9235	6963	2663	8725	6577	2851	8470	6384	2959
	18	25	5903	4512	1070	8198	6283	1337	7674	5930	1590	10000	7671	2556	9660	7414	2663	9150	7028	2878	8810	6770	2986
	19	27	6069	4637	1086	8431	6547	1354	7906	6150	1608	10340	7993	2582	10000	7735	2690	9490	7349	2878	9150	7092	2986
	22	30	6619	4596	1086	9188	6503	1354	8605	6106	1608	11275	7929	2609	10935	7671	2717	10000	7478	2986	9405	7349	3147
	24	32	7005	4596	1103	9712	6503	1371	9071	6106	1626	11955	7929	2609	11530	7671	2744	10340	7607	3067	9575	7542	3255
1.5+1.5+1.8+ 2.5+4.2	12	18	6073	4753	1403	6975	5886	1659	6567	5733	1884	8470	7356	2792	8215	7099	2896	7790	6577	3078	7535	6520	3182
	14	20	6073	4753	1403	7382	5886	1659	6975	5777	1901	8980	7356	2818	8725	7163	2922	8215	6577	3104	7960	6584	3234
	16	22	6073	4962	1419	7790	5886	1676	7324	5777	1919	9490	7356	2844	9235	7163	2974	8725	6577	3156	8470	6584	3260
	18	25	6403	5212	1434	8198	6283	1692	7674	6130	1936	10000	7871	2870	9660	7614	2974	9150	7028	3182	8810	6970	3286
	19	27	6569	5337	1450	8431	6547	1709	7906	6350	1954	10340	8193	2896	10000	7935	3000	9490	7349	3182	9150	7292	3286
	22	30	7119	5296	1450	9188	6503	1709	8605	6306	1954	11275	8129	2922	10935	7871	3026	10000	7478	3286	9405	7549	3442
	24	32	7505	5296	1466	9712	6503	1725	9071	6306	1971	11955	8129	2922	11530	7871	3052	10340	7607	3364	9575	7742	3546
1.5+1.5+1.8+ 2.5+5.0	12	18	6073	4753	1783	6975	5886	2039	6567	5733	2264	8470	7356	3172	8215	7099	3276	7790	6577	3458	7535	6520	3562
	14	20	6073	4753	1783	7382	5886	2039	6975	5777	2281	8980	7356	3198	8725	7163	3302	8215	6577	3484	7960	6584	3614
	16	22	6073	4962	1799	7790	5886	2056	7324	5777	2299	9490	7356	3224	9235	7163	3354	8725	6577	3536	8470	6584	3640
	18	25	6403	5212	1814	8198	6283	2072	7674	6130	2316	10000	7871	3250	9660	7614	3354	9150	7028	3562	8810	6970	3666
	19	27	6569	5337	1830	8431	6547	2089	7906	6350	2334	10340	8193	3276	10000	7935	3380	9490	7349	3562	9150	7292	3666
	22	30	7119	5296	1830	9188	6503	2089	8605	6306	2334	11275	8129	3302	10935	7871	3406	10000	7478	3666	9405	7549	3822
	24	32	7505	5296	1846	9712	6503	2105	9071	6306	2351	11955	8129	3302	11530	7871	3432	10340	7607	3744	9575	7742	3926

	INDOOR		OUTDOOR TEMPERATURE (°CDB)																				
	EWB	EDB	-10			21			27			32			35			40			43		
	°C	°C	TC	SHC	PI	TC	SHC	PI	TC	SHC	PI	TC	SHC	PI	TC	SHC	PI	TC	SHC	PI	TC	SHC	PI
1.5+1.5+1.8+ 2.5+6.0	12	18	6073	4753	1783	6975	5886	2039	6567	5733	2264	8470	7356	3172	8215	7099	3276	7790	6577	3458	7535	6520	3562
	14	20	6073	4753	1783	7382	5886	2039	6975	5777	2281	8980	7356	3198	8725	7163	3302	8215	6577	3484	7960	6584	3614
	16	22	6073	4962	1799	7790	5886	2056	7324	5777	2299	9490	7356	3224	9235	7163	3354	8725	6577	3536	8470	6584	3640
	18	25	6403	5212	1814	8198	6283	2072	7674	6130	2316	10000	7871	3250	9660	7614	3354	9150	7028	3562	8810	6970	3666
	19	27	6569	5337	1830	8431	6547	2089	7906	6350	2334	10340	8193	3276	10000	7935	3380	9490	7349	3562	9150	7292	3666
	22	30	7119	5296	1830	9188	6503	2089	8605	6306	2334	11275	8129	3302	10935	7871	3406	10000	7478	3666	9405	7549	3822
	24	32	7505	5296	1846	9712	6503	2105	9071	6306	2351	11955	8129	3302	11530	7871	3432	10340	7607	3744	9575	7742	3926
1.5+1.5+1.8+ 3.5+3.5	12	18	6073	4753	1783	6975	5886	2039	6567	5733	2264	8470	7356	3172	8215	7099	3276	7790	6577	3458	7535	6520	3562
	14	20	6073	4753	1783	7382	5886	2039	6975	5777	2281	8980	7356	3198	8725	7163	3302	8215	6577	3484	7960	6584	3614
	16	22	6073	4962	1799	7790	5886	2056	7324	5777	2299	9490	7356	3224	9235	7163	3354	8725	6577	3536	8470	6584	3640
	18	25	6403	5212	1814	8198	6283	2072	7674	6130	2316	10000	7871	3250	9660	7614	3354	9150	7028	3562	8810	6970	3666
	19	27	6569	5337	1830	8431	6547	2089	7906	6350	2334	10340	8193	3276	10000	7935	3380	9490	7349	3562	9150	7292	3666
	22	30	7119	5296	1830	9188	6503	2089	8605	6306	2334	11275	8129	3302	10935	7871	3406	10000	7478	3666	9405	7549	3822
	24	32	7505	5296	1846	9712	6503	2105	9071	6306	2351	11955	8129	3302	11530	7871	3432	10340	7607	3744	9575	7742	3926
1.5+1.5+1.8+ 3.5+4.2	12	18	6073	4753	1783	6975	5886	2039	6567	5733	2264	8470	7356	3172	8215	7099	3276	7790	6577	3458	7535	6520	3562
	14	20	6073	4753	1783	7382	5886	2039	6975	5777	2281	8980	7356	3198	8725	7163	3302	8215	6577	3484	7960	6584	3614
	16	22	6073	4962	1799	7790	5886	2056	7324	5777	2299	9490	7356	3224	9235	7163	3354	8725	6577	3536	8470	6584	3640
	18	25	6403	5212	1814	8198	6283	2072	7674	6130	2316	10000	7871	3250	9660	7614	3354	9150	7028	3562	8810	6970	3666
	19	27	6569	5337	1830	8431	6547	2089	7906	6350	2334	10340	8193	3276	10000	7935	3380	9490	7349	3562	9150	7292	3666
	22	30	7119	5296	1830	9188	6503	2089	8605	6306	2334	11275	8129	3302	10935	7871	3406	10000	7478	3666	9405	7549	3822
	24	32	7505	5296	1846	9712	6503	2105	9071	6306	2351	11955	8129	3302	11530	7871	3432	10340	7607	3744	9575	7742	3926
1.5+1.5+1.8+ 3.5+5.0	12	18	6073	4753	2223	6975	5886	2479	6567	5733	2704	8470	7356	3612	8215	7099	3716	7790	6577	3898	7535	6520	4002
	14	20	6073	4753	2223	7382	5886	2479	6975	5777	2721	8980	7356	3638	8725	7163	3742	8215	6577	3924	7960	6584	4054
	16	22	6073	4962	2239	7790	5886	2496	7324	5777	2739	9490	7356	3664	9235	7163	3794	8725	6577	3976	8470	6584	4080
	18	25	6403	5212	2254	8198	6283	2512	7674	6130	2756	10000	7871	3690	9660	7614	3794	9150	7028	4002	8810	6970	4106
	19	27	6569	5337	2270	8431	6547	2529	7906	6350	2774	10340	8193	3716	10000	7935	3820	9490	7349	4002	9150	7292	4106
	22	30	7119	5296	2270	9188	6503	2529	8605	6306	2774	11275	8129	3742	10935	7871	3846	10000	7478	4106	9405	7549	4262
	24	32	7505	5296	2286	9712	6503	2545	9071	6306	2791	11955	8129	3742	11530	7871	3872	10340	7607	4184	9575	7742	4366
1.5+1.5+1.8+ 3.5+6.0	12	18	6073	4753	2223	6975	5886	2479	6567	5733	2704	8470	7356	3612	8215	7099	3716	7790	6577	3898	7535	6520	4002
	14	20	6073	4753	2223	7382	5886	2479	6975	5777	2721	8980	7356	3638	8725	7163	3742	8215	6577	3924	7960	6584	4054
	16	22	6073	4962	2239	7790	5886	2496	7324	5777	2739	9490	7356	3664	9235	7163	3794	8725	6577	3976	8470	6584	4080
	18	25	6403	5212	2254	8198	6283	2512	7674	6130	2756	10000	7871	3690	9660	7614	3794	9150	7028	4002	8810	6970	4106
	19	27	6569	5337	2270	8431	6547	2529	7906	6350	2774	10340	8193	3716	10000	7935	3820	9490	7349	4002	9150	7292	4106
	22	30	7119	5296	2270	9188	6503	2529	8605	6306	2774	11275	8129	3742	10935	7871	3846	10000	7478	4106	9405	7549	4262
	24	32	7505	5296	2286	9712	6503	2545	9071	6306	2791	11955	8129	3742	11530	7871	3872	10340	7607	4184	9575	7742	4366
1.5+1.5+1.8+ 4.2+4.2	12	18	6073	4753	2223	6975	5886	2479	6567	5733	2704	8470	7356	3612	8215	7099	3716	7790	6577	3898	7535	6520	4002
	14	20	6073	4753	2223	7382	5886	2479	6975	5777	2721	8980	7356	3638	8725	7163	3742	8215	6577	3924	7960	6584	4054
	16	22	6073	4962	2239	7790	5886	2496	7324	5777	2739	9490	7356	3664	9235	7163	3794	8725	6577	3976	8470	6584	4080
	18	25	6403	5212	2254	8198	6283	2512	7674	6130	2756	10000	7871	3690	9660	7614	3794	9150	7028	4002	8810	6970	4106
	19	27	6569	5337	2270	8431	6547	2529	7906	6350	2774	10340	8193	3716	10000	7935	3820	9490	7349	4002	9150	7292	4106
	22	30	7119	5296	2270	9188	6503	2529	8605	6306	2774	11275	8129	3742	10935	7871	3846	10000	7478	4106	9405	7549	4262
	24	32	7505	5296	2286	9712	6503	2545	9071	6306	2791	11955	8129	3742	11530	7871	3872	10340	7607	4184	9575	7742	4366

	INDOOR		OUTDOOR TEMPERATURE (°CDB)																				
	EWB	EDB	-10			21			27			32			35			40			43		
	°C	°C	TC	SHC	PI	TC	SHC	PI	TC	SHC	PI	TC	SHC	PI	TC	SHC	PI	TC	SHC	PI	TC	SHC	PI
1.5+1.5+1.8+ 4.2+5.0	12	18	6073	4753	2403	6975	5886	2659	6567	5733	2884	8470	7356	3792	8215	7099	3896	7790	6577	4078	7535	6520	4182
	14	20	6073	4753	2403	7382	5886	2659	6975	5777	2901	8980	7356	3818	8725	7163	3922	8215	6577	4104	7960	6584	4234
	16	22	6073	4962	2419	7790	5886	2676	7324	5777	2919	9490	7356	3844	9235	7163	3974	8725	6577	4156	8470	6584	4260
	18	25	6403	5212	2434	8198	6283	2692	7674	6130	2936	10000	7871	3870	9660	7614	3974	9150	7028	4182	8810	6970	4286
	19	27	6569	5337	2450	8431	6547	2709	7906	6350	2954	10340	8193	3896	10000	7935	4000	9490	7349	4182	9150	7292	4286
	22	30	7119	5296	2450	9188	6503	2709	8605	6306	2954	11275	8129	3922	10935	7871	4026	10000	7478	4286	9405	7549	4442
	24	32	7505	5296	2466	9712	6503	2725	9071	6306	2971	11955	8129	3922	11530	7871	4052	10340	7607	4364	9575	7742	4546
1.5+1.5+1.8+ 4.2+6.0	12	18	6073	4753	2403	6975	5886	2659	6567	5733	2884	8470	7356	3792	8215	7099	3896	7790	6577	4078	7535	6520	4182
	14	20	6073	4753	2403	7382	5886	2659	6975	5777	2901	8980	7356	3818	8725	7163	3922	8215	6577	4104	7960	6584	4234
	16	22	6073	4962	2419	7790	5886	2676	7324	5777	2919	9490	7356	3844	9235	7163	3974	8725	6577	4156	8470	6584	4260
	18	25	6403	5212	2434	8198	6283	2692	7674	6130	2936	10000	7871	3870	9660	7614	3974	9150	7028	4182	8810	6970	4286
	19	27	6569	5337	2450	8431	6547	2709	7906	6350	2954	10340	8193	3896	10000	7935	4000	9490	7349	4182	9150	7292	4286
	22	30	7119	5296	2450	9188	6503	2709	8605	6306	2954	11275	8129	3922	10935	7871	4026	10000	7478	4286	9405	7549	4442
	24	32	7505	5296	2466	9712	6503	2725	9071	6306	2971	11955	8129	3922	11530	7871	4052	10340	7607	4364	9575	7742	4546
1.5+1.5+1.8+ 5.0+5.0	12	18	6073	4753	2403	6975	5886	2659	6567	5733	2884	8470	7356	3792	8215	7099	3896	7790	6577	4078	7535	6520	4182
	14	20	6073	4753	2403	7382	5886	2659	6975	5777	2901	8980	7356	3818	8725	7163	3922	8215	6577	4104	7960	6584	4234
	16	22	6073	4962	2419	7790	5886	2676	7324	5777	2919	9490	7356	3844	9235	7163	3974	8725	6577	4156	8470	6584	4260
	18	25	6403	5212	2434	8198	6283	2692	7674	6130	2936	10000	7871	3870	9660	7614	3974	9150	7028	4182	8810	6970	4286
	19	27	6569	5337	2450	8431	6547	2709	7906	6350	2954	10340	8193	3896	10000	7935	4000	9490	7349	4182	9150	7292	4286
	22	30	7119	5296	2450	9188	6503	2709	8605	6306	2954	11275	8129	3922	10935	7871	4026	10000	7478	4286	9405	7549	4442
	24	32	7505	5296	2466	9712	6503	2725	9071	6306	2971	11955	8129	3922	11530	7871	4052	10340	7607	4364	9575	7742	4546
1.5+1.5+2.5+ 2.5+2.5	12	18	5573	4053	1038	6975	5886	1303	6567	5533	1535	8470	7156	2475	8215	6899	2582	7790	6577	2771	7535	6320	2878
	14	20	5573	4053	1038	7382	5886	1303	6975	5577	1553	8980	7156	2502	8725	6963	2609	8215	6577	2798	7960	6384	2932
	16	22	5573	4262	1054	7790	5886	1320	7324	5577	1571	9490	7156	2529	9235	6963	2663	8725	6577	2851	8470	6384	2959
	18	25	5903	4512	1070	8198	6283	1337	7674	5930	1590	10000	7671	2556	9660	7414	2663	9150	7028	2878	8810	6770	2986
	19	27	6069	4637	1086	8431	6547	1354	7906	6150	1608	10340	7993	2582	10000	7735	2690	9490	7349	2878	9150	7092	2986
	22	30	6619	4596	1086	9188	6503	1354	8605	6106	1608	11275	7929	2609	10935	7671	2717	10000	7478	2986	9405	7349	3147
	24	32	7005	4596	1103	9712	6503	1371	9071	6106	1626	11955	7929	2609	11530	7671	2744	10340	7607	3067	9575	7542	3255
1.5+1.5+2.5+ 2.5+3.5	12	18	6073	4753	1403	6975	5886	1659	6567	5733	1884	8470	7356	2792	8215	7099	2896	7790	6577	3078	7535	6520	3182
	14	20	6073	4753	1403	7382	5886	1659	6975	5777	1901	8980	7356	2818	8725	7163	2922	8215	6577	3104	7960	6584	3234
	16	22	6073	4962	1419	7790	5886	1676	7324	5777	1919	9490	7356	2844	9235	7163	2974	8725	6577	3156	8470	6584	3260
	18	25	6403	5212	1434	8198	6283	1692	7674	6130	1936	10000	7871	2870	9660	7614	2974	9150	7028	3182	8810	6970	3286
	19	27	6569	5337	1450	8431	6547	1709	7906	6350	1954	10340	8193	2896	10000	7935	3000	9490	7349	3182	9150	7292	3286
	22	30	7119	5296	1450	9188	6503	1709	8605	6306	1954	11275	8129	2922	10935	7871	3026	10000	7478	3286	9405	7549	3442
	24	32	7505	5296	1466	9712	6503	1725	9071	6306	1971	11955	8129	2922	11530	7871	3052	10340	7607	3364	9575	7742	3546
1.5+1.5+2.5+ 2.5+4.2	12	18	6073	4753	1683	6975	5886	1939	6567	5733	2164	8470	7356	3072	8215	7099	3176	7790	6577	3358	7535	6520	3462
	14	20	6073	4753	1683	7382	5886	1939	6975	5777	2181	8980	7356	3098	8725	7163	3202	8215	6577	3384	7960	6584	3514
	16	22	6073	4962	1699	7790	5886	1956	7324	5777	2199	9490	7356	3124	9235	7163	3254	8725	6577	3436	8470	6584	3540
	18	25	6403	5212	1714	8198	6283	1972	7674	6130	2216	10000	7871	3150	9660	7614	3254	9150	7028	3462	8810	6970	3566
	19	27	6569	5337	1730	8431	6547	1989	7906	6350	2234	10340	8193	3176	10000	7935	3280	9490	7349	3462	9150	7292	3566
	22	30	7119	5296	1730	9188	6503	1989	8605	6306	2234	11275	8129	3202	10935	7871	3306	10000	7478	3566	9405	7549	3722
	24	32	7505	5296	1746	9712	6503	2005	9071	6306	2251	11955	8129	3202	11530	7871	3332	10340	7607	3644	9575	7742	3826

	INDOOR		OUTDOOR TEMPERATURE (°CDB)																				
	EWB	EDB	-10			21			27			32			35			40			43		
	°C	°C	TC	SHC	PI	TC	SHC	PI	TC	SHC	PI	TC	SHC	PI	TC	SHC	PI	TC	SHC	PI	TC	SHC	PI
1.5+1.5+2.5+ 2.5+5.0	12	18	6073	4753	1883	6975	5886	1939	6567	5733	2364	8470	7356	3272	8215	7099	3376	7790	6577	3358	7535	6520	3662
	14	20	6073	4753	1883	7382	5886	1939	6975	5777	2381	8980	7356	3298	8725	7163	3402	8215	6577	3384	7960	6584	3714
	16	22	6073	4962	1899	7790	5886	1956	7324	5777	2399	9490	7356	3324	9235	7163	3454	8725	6577	3436	8470	6584	3740
	18	25	6403	5212	1914	8198	6283	1972	7674	6130	2416	10000	7871	3350	9660	7614	3454	9150	7028	3462	8810	6970	3766
	19	27	6569	5337	1930	8431	6547	1989	7906	6350	2434	10340	8193	3376	10000	7935	3480	9490	7349	3462	9150	7292	3766
	22	30	7119	5296	1930	9188	6503	1989	8605	6306	2434	11275	8129	3402	10935	7871	3506	10000	7478	3566	9405	7549	3922
	24	32	7505	5296	1946	9712	6503	2005	9071	6306	2451	11955	8129	3402	11530	7871	3532	10340	7607	3644	9575	7742	4026
1.5+1.5+2.5+ 2.5+6.0	12	18	6073	4753	1883	6975	5886	1939	6567	5733	2364	8470	7356	3272	8215	7099	3376	7790	6577	3358	7535	6520	3662
	14	20	6073	4753	1883	7382	5886	1939	6975	5777	2381	8980	7356	3298	8725	7163	3402	8215	6577	3384	7960	6584	3714
	16	22	6073	4962	1899	7790	5886	1956	7324	5777	2399	9490	7356	3324	9235	7163	3454	8725	6577	3436	8470	6584	3740
	18	25	6403	5212	1914	8198	6283	1972	7674	6130	2416	10000	7871	3350	9660	7614	3454	9150	7028	3462	8810	6970	3766
	19	27	6569	5337	1930	8431	6547	1989	7906	6350	2434	10340	8193	3376	10000	7935	3480	9490	7349	3462	9150	7292	3766
	22	30	7119	5296	1930	9188	6503	1989	8605	6306	2434	11275	8129	3402	10935	7871	3506	10000	7478	3566	9405	7549	3922
	24	32	7505	5296	1946	9712	6503	2005	9071	6306	2451	11955	8129	3402	11530	7871	3532	10340	7607	3644	9575	7742	4026
1.5+1.5+2.5+ 3.5+3.5	12	18	6073	4753	1683	6975	5886	1739	6567	5733	2164	8470	7356	3072	8215	7099	3176	7790	6577	3158	7535	6520	3462
	14	20	6073	4753	1683	7382	5886	1739	6975	5777	2181	8980	7356	3098	8725	7163	3202	8215	6577	3184	7960	6584	3514
	16	22	6073	4962	1699	7790	5886	1756	7324	5777	2199	9490	7356	3124	9235	7163	3254	8725	6577	3236	8470	6584	3540
	18	25	6403	5212	1714	8198	6283	1772	7674	6130	2216	10000	7871	3150	9660	7614	3254	9150	7028	3262	8810	6970	3566
	19	27	6569	5337	1730	8431	6547	1789	7906	6350	2234	10340	8193	3176	10000	7935	3280	9490	7349	3262	9150	7292	3566
	22	30	7119	5296	1730	9188	6503	1789	8605	6306	2234	11275	8129	3202	10935	7871	3306	10000	7478	3366	9405	7549	3722
	24	32	7505	5296	1746	9712	6503	1805	9071	6306	2251	11955	8129	3202	11530	7871	3332	10340	7607	3444	9575	7742	3826
1.5+1.5+2.5+ 3.5+4.2	12	18	6073	4753	1883	6975	5886	1939	6567	5733	2364	8470	7356	3272	8215	7099	3376	7790	6577	3358	7535	6520	3662
	14	20	6073	4753	1883	7382	5886	1939	6975	5777	2381	8980	7356	3298	8725	7163	3402	8215	6577	3384	7960	6584	3714
	16	22	6073	4962	1899	7790	5886	1956	7324	5777	2399	9490	7356	3324	9235	7163	3454	8725	6577	3436	8470	6584	3740
	18	25	6403	5212	1914	8198	6283	1972	7674	6130	2416	10000	7871	3350	9660	7614	3454	9150	7028	3462	8810	6970	3766
	19	27	6569	5337	1930	8431	6547	1989	7906	6350	2434	10340	8193	3376	10000	7935	3480	9490	7349	3462	9150	7292	3766
	22	30	7119	5296	1930	9188	6503	1989	8605	6306	2434	11275	8129	3402	10935	7871	3506	10000	7478	3566	9405	7549	3922
	24	32	7505	5296	1946	9712	6503	2005	9071	6306	2451	11955	8129	3402	11530	7871	3532	10340	7607	3644	9575	7742	4026
1.5+1.5+2.5+ 3.5+5.0	12	18	6073	4753	2023	6975	5886	2079	6567	5733	2504	8470	7356	3412	8215	7099	3516	7790	6577	3498	7535	6520	3802
	14	20	6073	4753	2023	7382	5886	2079	6975	5777	2521	8980	7356	3438	8725	7163	3542	8215	6577	3524	7960	6584	3854
	16	22	6073	4962	2039	7790	5886	2096	7324	5777	2539	9490	7356	3464	9235	7163	3594	8725	6577	3576	8470	6584	3880
	18	25	6403	5212	2054	8198	6283	2112	7674	6130	2556	10000	7871	3490	9660	7614	3594	9150	7028	3602	8810	6970	3906
	19	27	6569	5337	2070	8431	6547	2129	7906	6350	2574	10340	8193	3516	10000	7935	3620	9490	7349	3602	9150	7292	3906
	22	30	7119	5296	2070	9188	6503	2129	8605	6306	2574	11275	8129	3542	10935	7871	3646	10000	7478	3706	9405	7549	4062
	24	32	7505	5296	2086	9712	6503	2145	9071	6306	2591	11955	8129	3542	11530	7871	3672	10340	7607	3784	9575	7742	4166
1.5+1.5+2.5+ 3.5+6.0	12	18	6073	4753	2023	6975	5886	2079	6567	5733	2504	8470	7356	3412	8215	7099	3516	7790	6577	3498	7535	6520	3802
	14	20	6073	4753	2023	7382	5886	2079	6975	5777	2521	8980	7356	3438	8725	7163	3542	8215	6577	3524	7960	6584	3854
	16	22	6073	4962	2039	7790	5886	2096	7324	5777	2539	9490	7356	3464	9235	7163	3594	8725	6577	3576	8470	6584	3880
	18	25	6403	5212	2054	8198	6283	2112	7674	6130	2556	10000	7871	3490	9660	7614	3594	9150	7028	3602	8810	6970	3906
	19	27	6569	5337	2070	8431	6547	2129	7906	6350	2574	10340	8193	3516	10000	7935	3620	9490	7349	3602	9150	7292	3906
	22	30	7119	5296	2070	9188	6503	2129	8605	6306	2574	11275	8129	3542	10935	7871	3646	10000	7478	3706	9405	7549	4062
	24	32	7505	5296	2086	9712	6503	2145	9071	6306	2591	11955	8129	3542	11530	7871	3672	10340	7607	3784	9575	7742	4166

	INDOOR		OUTDOOR TEMPERATURE (°CDB)																				
	EWB	EDB	-10			21			27			32			35			40			43		
	°C	°C	TC	SHC	PI	TC	SHC	PI	TC	SHC	PI	TC	SHC	PI	TC	SHC	PI	TC	SHC	PI	TC	SHC	PI
1.5+1.5+2.5+ 4.2+4.2	12	18	6073	4753	2023	6975	5886	2079	6567	5733	2504	8470	7356	3412	8215	7099	3516	7790	6577	3498	7535	6520	3802
	14	20	6073	4753	2023	7382	5886	2079	6975	5777	2521	8980	7356	3438	8725	7163	3542	8215	6577	3524	7960	6584	3854
	16	22	6073	4962	2039	7790	5886	2096	7324	5777	2539	9490	7356	3464	9235	7163	3594	8725	6577	3576	8470	6584	3880
	18	25	6403	5212	2054	8198	6283	2112	7674	6130	2556	10000	7871	3490	9660	7614	3594	9150	7028	3602	8810	6970	3906
	19	27	6569	5337	2070	8431	6547	2129	7906	6350	2574	10340	8193	3516	10000	7935	3620	9490	7349	3602	9150	7292	3906
	22	30	7119	5296	2070	9188	6503	2129	8605	6306	2574	11275	8129	3542	10935	7871	3646	10000	7478	3706	9405	7549	4062
	24	32	7505	5296	2086	9712	6503	2145	9071	6306	2591	11955	8129	3542	11530	7871	3672	10340	7607	3784	9575	7742	4166
1.5+1.5+2.5+ 4.2+5.0	12	18	6073	4753	2403	6975	5886	2659	6567	5733	2884	8470	7356	3792	8215	7099	3896	7790	6577	4078	7535	6520	4182
	14	20	6073	4753	2403	7382	5886	2659	6975	5777	2901	8980	7356	3818	8725	7163	3922	8215	6577	4104	7960	6584	4234
	16	22	6073	4962	2419	7790	5886	2676	7324	5777	2919	9490	7356	3844	9235	7163	3974	8725	6577	4156	8470	6584	4260
	18	25	6403	5212	2434	8198	6283	2692	7674	6130	2936	10000	7871	3870	9660	7614	3974	9150	7028	4182	8810	6970	4286
	19	27	6569	5337	2450	8431	6547	2709	7906	6350	2954	10340	8193	3896	10000	7935	4000	9490	7349	4182	9150	7292	4286
	22	30	7119	5296	2450	9188	6503	2709	8605	6306	2954	11275	8129	3922	10935	7871	4026	10000	7478	4286	9405	7549	4442
	24	32	7505	5296	2466	9712	6503	2725	9071	6306	2971	11955	8129	3922	11530	7871	4052	10340	7607	4364	9575	7742	4546
1.5+1.5+2.5+ 5.0+5.0	12	18	6073	4753	2403	6975	5886	2659	6567	5733	2884	8470	7356	3792	8215	7099	3896	7790	6577	4078	7535	6520	4182
	14	20	6073	4753	2403	7382	5886	2659	6975	5777	2901	8980	7356	3818	8725	7163	3922	8215	6577	4104	7960	6584	4234
	16	22	6073	4962	2419	7790	5886	2676	7324	5777	2919	9490	7356	3844	9235	7163	3974	8725	6577	4156	8470	6584	4260
	18	25	6403	5212	2434	8198	6283	2692	7674	6130	2936	10000	7871	3870	9660	7614	3974	9150	7028	4182	8810	6970	4286
	19	27	6569	5337	2450	8431	6547	2709	7906	6350	2954	10340	8193	3896	10000	7935	4000	9490	7349	4182	9150	7292	4286
	22	30	7119	5296	2450	9188	6503	2709	8605	6306	2954	11275	8129	3922	10935	7871	4026	10000	7478	4286	9405	7549	4442
	24	32	7505	5296	2466	9712	6503	2725	9071	6306	2971	11955	8129	3922	11530	7871	4052	10340	7607	4364	9575	7742	4546
1.5+1.5+2.5+ 5.0+6.0	12	18	6073	4753	2403	6975	5886	2659	6567	5733	2884	8470	7356	3792	8215	7099	3896	7790	6577	4078	7535	6520	4182
	14	20	6073	4753	2403	7382	5886	2659	6975	5777	2901	8980	7356	3818	8725	7163	3922	8215	6577	4104	7960	6584	4234
	16	22	6073	4962	2419	7790	5886	2676	7324	5777	2919	9490	7356	3844	9235	7163	3974	8725	6577	4156	8470	6584	4260
	18	25	6403	5212	2434	8198	6283	2692	7674	6130	2936	10000	7871	3870	9660	7614	3974	9150	7028	4182	8810	6970	4286
	19	27	6569	5337	2450	8431	6547	2709	7906	6350	2954	10340	8193	3896	10000	7935	4000	9490	7349	4182	9150	7292	4286
	22	30	7119	5296	2450	9188	6503	2709	8605	6306	2954	11275	8129	3922	10935	7871	4026	10000	7478	4286	9405	7549	4442
	24	32	7505	5296	2466	9712	6503	2725	9071	6306	2971	11955	8129	3922	11530	7871	4052	10340	7607	4364	9575	7742	4546
1.5+1.5+3.5+ 3.5+3.5	12	18	6073	4753	2023	6975	5886	2079	6567	5733	2504	8470	7356	3412	8215	7099	3516	7790	6577	3498	7535	6520	3802
	14	20	6073	4753	2023	7382	5886	2079	6975	5777	2521	8980	7356	3438	8725	7163	3542	8215	6577	3524	7960	6584	3854
	16	22	6073	4962	2039	7790	5886	2096	7324	5777	2539	9490	7356	3464	9235	7163	3594	8725	6577	3576	8470	6584	3880
	18	25	6403	5212	2054	8198	6283	2112	7674	6130	2556	10000	7871	3490	9660	7614	3594	9150	7028	3602	8810	6970	3906
	19	27	6569	5337	2070	8431	6547	2129	7906	6350	2574	10340	8193	3516	10000	7935	3620	9490	7349	3602	9150	7292	3906
	22	30	7119	5296	2070	9188	6503	2129	8605	6306	2574	11275	8129	3542	10935	7871	3646	10000	7478	3706	9405	7549	4062
	24	32	7505	5296	2086	9712	6503	2145	9071	6306	2591	11955	8129	3542	11530	7871	3672	10340	7607	3784	9575	7742	4166
1.5+1.5+3.5+ 3.5+4.2	12	18	6073	4753	2023	6975	5886	2079	6567	5733	2504	8470	7356	3412	8215	7099	3516	7790	6577	3498	7535	6520	3802
	14	20	6073	4753	2023	7382	5886	2079	6975	5777	2521	8980	7356	3438	8725	7163	3542	8215	6577	3524	7960	6584	3854
	16	22	6073	4962	2039	7790	5886	2096	7324	5777	2539	9490	7356	3464	9235	7163	3594	8725	6577	3576	8470	6584	3880
	18	25	6403	5212	2054	8198	6283	2112	7674	6130	2556	10000	7871	3490	9660	7614	3594	9150	7028	3602	8810	6970	3906
	19	27	6569	5337	2070	8431	6547	2129	7906	6350	2574	10340	8193	3516	10000	7935	3620	9490	7349	3602	9150	7292	3906
	22	30	7119	5296	2070	9188	6503	2129	8605	6306	2574	11275	8129	3542	10935	7871	3646	10000	7478	3706	9405	7549	4062
	24	32	7505	5296	2086	9712	6503	2145	9071	6306	2591	11955	8129	3542	11530	7871	3672	10340	7607	3784	9575	7742	4166
1.5+1.5+3.5+ 3.5+5.0	12	18	6073	4753	2403	6975	5886	2659	6567	5733	2884	8470	7356	3792	8215	7099	3896	7790	6577	4078	7535	6520	4182
	14	20	6073	4753	2403	7382	5886	2659	6975	5777	2901	8980	7356	3818	8725	7163	3922	8215	6577	4104	7960	6584	4234
	16	22	6073	4962	2419	7790	5886	2676	7324	5777	2919	9490	7356	3844	9235	7163	3974	8725	6577	4156	8470	6584	4260
	18	25	6403	5212	2434	8198	6283	2692	7674	6130	2936	10000	7871	3870	9660	7614	3974	9150	7028	4182	8810	6970	4286
	19	27	6569	5337	2450	8431	6547	2709	7906	6350	2954	10340	8193	3896	10000	7935	4000	9490	7349	4182	9150	7292	4286
	22	30	7119	5296	2450	9188	6503	2709	8605	6306	2954	11275	8129	3922	10935	7871	4026	10000	7478	4286	9405	7549	4442
	24	32	7505	5296	2466	9712	6503	2725	9071	6306	2971	11955	8129	3922	11530	7871	4052	10340	7607	4364	9575	7742	4546

	INDOOR		OUTDOOR TEMPERATURE (°CDB)																				
	EWB	EDB	-10			21			27			32			35			40			43		
	°C	°C	TC	SHC	PI	TC	SHC	PI	TC	SHC	PI	TC	SHC	PI	TC	SHC	PI	TC	SHC	PI	TC	SHC	PI
1.5+1.5+3.5+ 3.5+6.0	12	18	6073	4753	2403	6975	5886	2659	6567	5733	2884	8470	7356	3792	8215	7099	3896	7790	6577	4078	7535	6520	4182
	14	20	6073	4753	2403	7382	5886	2659	6975	5777	2901	8980	7356	3818	8725	7163	3922	8215	6577	4104	7960	6584	4234
	16	22	6073	4962	2419	7790	5886	2676	7324	5777	2919	9490	7356	3844	9235	7163	3974	8725	6577	4156	8470	6584	4260
	18	25	6403	5212	2434	8198	6283	2692	7674	6130	2936	10000	7871	3870	9660	7614	3974	9150	7028	4182	8810	6970	4286
	19	27	6569	5337	2450	8431	6547	2709	7906	6350	2954	10340	8193	3896	10000	7935	4000	9490	7349	4182	9150	7292	4286
	22	30	7119	5296	2450	9188	6503	2709	8605	6306	2954	11275	8129	3922	10935	7871	4026	10000	7478	4286	9405	7549	4442
	24	32	7505	5296	2466	9712	6503	2725	9071	6306	2971	11955	8129	3922	11530	7871	4052	10340	7607	4364	9575	7742	4546
1.5+1.8+1.8+ 1.8+1.8	12	18	4773	3453	976	5675	4786	1225	5267	4433	1444	7170	6056	2328	6915	5799	2429	6490	5477	2606	6235	5220	2707
	14	20	4773	3453	976	6082	4786	1225	5675	4477	1461	7680	6056	2353	7425	5863	2454	6915	5477	2631	6660	5284	2758
	16	22	4773	3662	991	6490	4786	1241	6024	4477	1478	8190	6056	2378	7935	5863	2505	7425	5477	2682	7170	5284	2783
	18	25	5103	3912	1007	6898	5183	1257	6374	4830	1495	8700	6571	2404	8360	6314	2505	7850	5928	2707	7510	5670	2808
	19	27	5269	4037	1022	7131	5447	1274	6606	5050	1512	9040	6893	2429	8700	6635	2530	8190	6249	2707	7850	5992	2808
	22	30	5819	3996	1022	7888	5403	1274	7305	5006	1512	9975	6829	2454	9635	6571	2555	8700	6378	2808	8105	6249	2960
	24	32	6205	3996	1037	8412	5403	1290	7771	5006	1529	10655	6829	2454	10230	6571	2581	9040	6507	2884	8275	6442	3061
1.5+1.8+1.8+ 1.8+2.5	12	18	5073	3753	1038	6375	5486	1303	5967	5133	1535	7870	6756	2475	7615	6499	2582	7190	6177	2771	6935	5920	2878
	14	20	5073	3753	1038	6782	5486	1303	6375	5177	1553	8380	6756	2502	8125	6563	2609	7615	6177	2798	7360	5984	2932
	16	22	5073	3962	1054	7190	5486	1320	6724	5177	1571	8890	6756	2529	8635	6563	2663	8125	6177	2851	7870	5984	2959
	18	25	5403	4212	1070	7598	5883	1337	7074	5530	1590	9400	7271	2556	9060	7014	2663	8550	6628	2878	8210	6370	2986
	19	27	5569	4337	1086	7831	6147	1354	7306	5750	1608	9740	7593	2582	9400	7335	2690	8890	6949	2878	8550	6692	2986
	22	30	6119	4296	1086	8588	6103	1354	8005	5706	1608	10675	7529	2609	10335	7271	2717	9400	7078	2986	8805	6949	3147
	24	32	6505	4296	1103	9112	6103	1371	8471	5706	1626	11355	7529	2609	10930	7271	2744	9740	7207	3067	8975	7142	3255
1.5+1.8+1.8+ 1.8+3.5	12	18	5673	4253	1038	6975	5986	1303	6567	5633	1535	8470	7256	2475	8215	6999	2582	7790	6677	2771	7535	6420	2878
	14	20	5673	4253	1038	7382	5986	1303	6975	5677	1553	8980	7256	2502	8725	7063	2609	8215	6677	2798	7960	6484	2932
	16	22	5673	4462	1054	7790	5986	1320	7324	5677	1571	9490	7256	2529	9235	7063	2663	8725	6677	2851	8470	6484	2959
	18	25	6003	4712	1070	8198	6383	1337	7674	6030	1590	10000	7771	2556	9660	7514	2663	9150	7128	2878	8810	6870	2986
	19	27	6169	4837	1086	8431	6647	1354	7906	6250	1608	10340	8093	2582	10000	7835	2690	9490	7449	2878	9150	7192	2986
	22	30	6719	4796	1086	9188	6603	1354	8605	6206	1608	11275	8029	2609	10935	7771	2717	10000	7578	2986	9405	7449	3147
	24	32	7105	4796	1103	9712	6603	1371	9071	6206	1626	11955	8029	2609	11530	7771	2744	10340	7707	3067	9575	7642	3255
1.5+1.8+1.8+ 1.8+4.2	12	18	6073	4753	1403	6975	5886	1659	6567	5733	1884	8470	7356	2792	8215	7099	2896	7790	6577	3078	7535	6520	3182
	14	20	6073	4753	1403	7382	5886	1659	6975	5777	1901	8980	7356	2818	8725	7163	2922	8215	6577	3104	7960	6584	3234
	16	22	6073	4962	1419	7790	5886	1676	7324	5777	1919	9490	7356	2844	9235	7163	2974	8725	6577	3156	8470	6584	3260
	18	25	6403	5212	1434	8198	6283	1692	7674	6130	1936	10000	7871	2870	9660	7614	2974	9150	7028	3182	8810	6970	3286
	19	27	6569	5337	1450	8431	6547	1709	7906	6350	1954	10340	8193	2896	10000	7935	3000	9490	7349	3182	9150	7292	3286
	22	30	7119	5296	1450	9188	6503	1709	8605	6306	1954	11275	8129	2922	10935	7871	3026	10000	7478	3286	9405	7549	3442
	24	32	7505	5296	1466	9712	6503	1725	9071	6306	1971	11955	8129	2922	11530	7871	3052	10340	7607	3364	9575	7742	3546
1.5+1.8+1.8+ 1.8+5.0	12	18	6073	4753	1663	6975	5886	1919	6567	5733	2144	8470	7356	3052	8215	7099	3156	7790	6577	3338	7535	6520	3442
	14	20	6073	4753	1663	7382	5886	1919	6975	5777	2161	8980	7356	3078	8725	7163	3182	8215	6577	3364	7960	6584	3494
	16	22	6073	4962	1679	7790	5886	1936	7324	5777	2179	9490	7356	3104	9235	7163	3234	8725	6577	3416	8470	6584	3520
	18	25	6403	5212	1694	8198	6283	1952	7674	6130	2196	10000	7871	3130	9660	7614	3234	9150	7028	3442	8810	6970	3546
	19	27	6569	5337	1710	8431	6547	1969	7906	6350	2214	10340	8193	3156	10000	7935	3260	9490	7349	3442	9150	7292	3546
	22	30	7119	5296	1710	9188	6503	1969	8605	6306	2214	11275	8129	3182	10935	7871	3286	10000	7478	3546	9405	7549	3702
	24	32	7505	5296	1726	9712	6503	1985	9071	6306	2231	11955	8129	3182	11530	7871	3312	10340	7607	3624	9575	7742	3806

	INDOOR		OUTDOOR TEMPERATURE (°CDB)																				
	EWB	EDB	-10			21			27			32			35			40			43		
	°C	°C	TC	SHC	PI	TC	SHC	PI	TC	SHC	PI	TC	SHC	PI	TC	SHC	PI	TC	SHC	PI	TC	SHC	PI
1.5+1.8+1.8+1.8+6.0	12	18	6073	4753	1663	6975	5886	1919	6567	5733	2144	8470	7356	3052	8215	7099	3156	7790	6577	3338	7535	6520	3442
	14	20	6073	4753	1663	7382	5886	1919	6975	5777	2161	8980	7356	3078	8725	7163	3182	8215	6577	3364	7960	6584	3494
	16	22	6073	4962	1679	7790	5886	1936	7324	5777	2179	9490	7356	3104	9235	7163	3234	8725	6577	3416	8470	6584	3520
	18	25	6403	5212	1694	8198	6283	1952	7674	6130	2196	10000	7871	3130	9660	7614	3234	9150	7028	3442	8810	6970	3546
	19	27	6569	5337	1710	8431	6547	1969	7906	6350	2214	10340	8193	3156	10000	7935	3260	9490	7349	3442	9150	7292	3546
	22	30	7119	5296	1710	9188	6503	1969	8605	6306	2214	11275	8129	3182	10935	7871	3286	10000	7478	3546	9405	7549	3702
	24	32	7505	5296	1726	9712	6503	1985	9071	6306	2231	11955	8129	3182	11530	7871	3312	10340	7607	3624	9575	7742	3806
1.5+1.8+1.8+2.5+2.5	12	18	5673	4253	1038	6975	5986	1303	6567	5633	1535	8470	7256	2475	8215	6999	2582	7790	6677	2771	7535	6420	2878
	14	20	5673	4253	1038	7382	5986	1303	6975	5677	1553	8980	7256	2502	8725	7063	2609	8215	6677	2798	7960	6484	2932
	16	22	5673	4462	1054	7790	5986	1320	7324	5677	1571	9490	7256	2529	9235	7063	2663	8725	6677	2851	8470	6484	2959
	18	25	6003	4712	1070	8198	6383	1337	7674	6030	1590	10000	7771	2556	9660	7514	2663	9150	7128	2878	8810	6870	2986
	19	27	6169	4837	1086	8431	6647	1354	7906	6250	1608	10340	8093	2582	10000	7835	2690	9490	7449	2878	9150	7192	2986
	22	30	6719	4796	1086	9188	6603	1354	8605	6206	1608	11275	8029	2609	10935	7771	2717	10000	7578	2986	9405	7449	3147
	24	32	7105	4796	1103	9712	6603	1371	9071	6206	1626	11955	8029	2609	11530	7771	2744	10340	7707	3067	9575	7642	3255
1.5+1.8+1.8+2.5+3.5	12	18	5673	4253	1038	6975	5986	1303	6567	5633	1535	8470	7256	2475	8215	6999	2582	7790	6677	2771	7535	6420	2878
	14	20	5673	4253	1038	7382	5986	1303	6975	5677	1553	8980	7256	2502	8725	7063	2609	8215	6677	2798	7960	6484	2932
	16	22	5673	4462	1054	7790	5986	1320	7324	5677	1571	9490	7256	2529	9235	7063	2663	8725	6677	2851	8470	6484	2959
	18	25	6003	4712	1070	8198	6383	1337	7674	6030	1590	10000	7771	2556	9660	7514	2663	9150	7128	2878	8810	6870	2986
	19	27	6169	4837	1086	8431	6647	1354	7906	6250	1608	10340	8093	2582	10000	7835	2690	9490	7449	2878	9150	7192	2986
	22	30	6719	4796	1086	9188	6603	1354	8605	6206	1608	11275	8029	2609	10935	7771	2717	10000	7578	2986	9405	7449	3147
	24	32	7105	4796	1103	9712	6603	1371	9071	6206	1626	11955	8029	2609	11530	7771	2744	10340	7707	3067	9575	7642	3255
1.5+1.8+1.8+2.5+4.2	12	18	6073	4753	1663	6975	5886	1919	6567	5733	2144	8470	7356	3052	8215	7099	3156	7790	6577	3338	7535	6520	3442
	14	20	6073	4753	1663	7382	5886	1919	6975	5777	2161	8980	7356	3078	8725	7163	3182	8215	6577	3364	7960	6584	3494
	16	22	6073	4962	1679	7790	5886	1936	7324	5777	2179	9490	7356	3104	9235	7163	3234	8725	6577	3416	8470	6584	3520
	18	25	6403	5212	1694	8198	6283	1952	7674	6130	2196	10000	7871	3130	9660	7614	3234	9150	7028	3442	8810	6970	3546
	19	27	6569	5337	1710	8431	6547	1969	7906	6350	2214	10340	8193	3156	10000	7935	3260	9490	7349	3442	9150	7292	3546
	22	30	7119	5296	1710	9188	6503	1969	8605	6306	2214	11275	8129	3182	10935	7871	3286	10000	7478	3546	9405	7549	3702
	24	32	7505	5296	1726	9712	6503	1985	9071	6306	2231	11955	8129	3182	11530	7871	3312	10340	7607	3624	9575	7742	3806
1.5+1.8+1.8+2.5+5.0	12	18	6073	4753	1663	6975	5886	1919	6567	5733	2144	8470	7356	3052	8215	7099	3156	7790	6577	3338	7535	6520	3442
	14	20	6073	4753	1663	7382	5886	1919	6975	5777	2161	8980	7356	3078	8725	7163	3182	8215	6577	3364	7960	6584	3494
	16	22	6073	4962	1679	7790	5886	1936	7324	5777	2179	9490	7356	3104	9235	7163	3234	8725	6577	3416	8470	6584	3520
	18	25	6403	5212	1694	8198	6283	1952	7674	6130	2196	10000	7871	3130	9660	7614	3234	9150	7028	3442	8810	6970	3546
	19	27	6569	5337	1710	8431	6547	1969	7906	6350	2214	10340	8193	3156	10000	7935	3260	9490	7349	3442	9150	7292	3546
	22	30	7119	5296	1710	9188	6503	1969	8605	6306	2214	11275	8129	3182	10935	7871	3286	10000	7478	3546	9405	7549	3702
	24	32	7505	5296	1726	9712	6503	1985	9071	6306	2231	11955	8129	3182	11530	7871	3312	10340	7607	3624	9575	7742	3806
1.5+1.8+1.8+2.5+6.0	12	18	6073	4753	1953	6975	5886	2009	6567	5733	2434	8470	7356	3342	8215	7099	3446	7790	6577	3428	7535	6520	3732
	14	20	6073	4753	1953	7382	5886	2009	6975	5777	2451	8980	7356	3368	8725	7163	3472	8215	6577	3454	7960	6584	3784
	16	22	6073	4962	1969	7790	5886	2026	7324	5777	2469	9490	7356	3394	9235	7163	3524	8725	6577	3506	8470	6584	3810
	18	25	6403	5212	1984	8198	6283	2042	7674	6130	2486	10000	7871	3420	9660	7614	3524	9150	7028	3532	8810	6970	3836
	19	27	6569	5337	2000	8431	6547	2059	7906	6350	2504	10340	8193	3446	10000	7935	3550	9490	7349	3532	9150	7292	3836
	22	30	7119	5296	2000	9188	6503	2059	8605	6306	2504	11275	8129	3472	10935	7871	3576	10000	7478	3636	9405	7549	3992
	24	32	7505	5296	2016	9712	6503	2075	9071	6306	2521	11955	8129	3472	11530	7871	3602	10340	7607	3714	9575	7742	4096

	INDOOR		OUTDOOR TEMPERATURE (°CDB)																				
	EWB	EDB	-10			21			27			32			35			40			43		
	°C	°C	TC	SHC	PI	TC	SHC	PI	TC	SHC	PI	TC	SHC	PI	TC	SHC	PI	TC	SHC	PI	TC	SHC	PI
1.5+1.8+1.8+ 3.5+3.5	12	18	6073	4753	1663	6975	5886	1919	6567	5733	2144	8470	7356	3052	8215	7099	3156	7790	6577	3338	7535	6520	3442
	14	20	6073	4753	1663	7382	5886	1919	6975	5777	2161	8980	7356	3078	8725	7163	3182	8215	6577	3364	7960	6584	3494
	16	22	6073	4962	1679	7790	5886	1936	7324	5777	2179	9490	7356	3104	9235	7163	3234	8725	6577	3416	8470	6584	3520
	18	25	6403	5212	1694	8198	6283	1952	7674	6130	2196	10000	7871	3130	9660	7614	3234	9150	7028	3442	8810	6970	3546
	19	27	6569	5337	1710	8431	6547	1969	7906	6350	2214	10340	8193	3156	10000	7935	3260	9490	7349	3442	9150	7292	3546
	22	30	7119	5296	1710	9188	6503	1969	8605	6306	2214	11275	8129	3182	10935	7871	3286	10000	7478	3546	9405	7549	3702
	24	32	7505	5296	1726	9712	6503	1985	9071	6306	2231	11955	8129	3182	11530	7871	3312	10340	7607	3624	9575	7742	3806
1.5+1.8+1.8+ 3.5+4.2	12	18	6073	4753	1953	6975	5886	2009	6567	5733	2434	8470	7356	3342	8215	7099	3446	7790	6577	3428	7535	6520	3732
	14	20	6073	4753	1953	7382	5886	2009	6975	5777	2451	8980	7356	3368	8725	7163	3472	8215	6577	3454	7960	6584	3784
	16	22	6073	4962	1969	7790	5886	2026	7324	5777	2469	9490	7356	3394	9235	7163	3524	8725	6577	3506	8470	6584	3810
	18	25	6403	5212	1984	8198	6283	2042	7674	6130	2486	10000	7871	3420	9660	7614	3524	9150	7028	3532	8810	6970	3836
	19	27	6569	5337	2000	8431	6547	2059	7906	6350	2504	10340	8193	3446	10000	7935	3550	9490	7349	3532	9150	7292	3836
	22	30	7119	5296	2000	9188	6503	2059	8605	6306	2504	11275	8129	3472	10935	7871	3576	10000	7478	3636	9405	7549	3992
	24	32	7505	5296	2016	9712	6503	2075	9071	6306	2521	11955	8129	3472	11530	7871	3602	10340	7607	3714	9575	7742	4096
1.5+1.8+1.8+ 3.5+5.0	12	18	6073	4753	2403	6975	5886	2659	6567	5733	2884	8470	7356	3792	8215	7099	3896	7790	6577	4078	7535	6520	4182
	14	20	6073	4753	2403	7382	5886	2659	6975	5777	2901	8980	7356	3818	8725	7163	3922	8215	6577	4104	7960	6584	4234
	16	22	6073	4962	2419	7790	5886	2676	7324	5777	2919	9490	7356	3844	9235	7163	3974	8725	6577	4156	8470	6584	4260
	18	25	6403	5212	2434	8198	6283	2692	7674	6130	2936	10000	7871	3870	9660	7614	3974	9150	7028	4182	8810	6970	4286
	19	27	6569	5337	2450	8431	6547	2709	7906	6350	2954	10340	8193	3896	10000	7935	4000	9490	7349	4182	9150	7292	4286
	22	30	7119	5296	2450	9188	6503	2709	8605	6306	2954	11275	8129	3922	10935	7871	4026	10000	7478	4286	9405	7549	4442
	24	32	7505	5296	2466	9712	6503	2725	9071	6306	2971	11955	8129	3922	11530	7871	4052	10340	7607	4364	9575	7742	4546
1.5+1.8+1.8+ 3.5+6.0	12	18	6073	4753	2403	6975	5886	2659	6567	5733	2884	8470	7356	3792	8215	7099	3896	7790	6577	4078	7535	6520	4182
	14	20	6073	4753	2403	7382	5886	2659	6975	5777	2901	8980	7356	3818	8725	7163	3922	8215	6577	4104	7960	6584	4234
	16	22	6073	4962	2419	7790	5886	2676	7324	5777	2919	9490	7356	3844	9235	7163	3974	8725	6577	4156	8470	6584	4260
	18	25	6403	5212	2434	8198	6283	2692	7674	6130	2936	10000	7871	3870	9660	7614	3974	9150	7028	4182	8810	6970	4286
	19	27	6569	5337	2450	8431	6547	2709	7906	6350	2954	10340	8193	3896	10000	7935	4000	9490	7349	4182	9150	7292	4286
	22	30	7119	5296	2450	9188	6503	2709	8605	6306	2954	11275	8129	3922	10935	7871	4026	10000	7478	4286	9405	7549	4442
	24	32	7505	5296	2466	9712	6503	2725	9071	6306	2971	11955	8129	3922	11530	7871	4052	10340	7607	4364	9575	7742	4546
1.5+1.8+1.8+ 4.2+4.2	12	18	6073	4753	2083	6975	5886	2139	6567	5733	2564	8470	7356	3472	8215	7099	3576	7790	6577	3558	7535	6520	3862
	14	20	6073	4753	2083	7382	5886	2139	6975	5777	2581	8980	7356	3498	8725	7163	3602	8215	6577	3584	7960	6584	3914
	16	22	6073	4962	2099	7790	5886	2156	7324	5777	2599	9490	7356	3524	9235	7163	3654	8725	6577	3636	8470	6584	3940
	18	25	6403	5212	2114	8198	6283	2172	7674	6130	2616	10000	7871	3550	9660	7614	3654	9150	7028	3662	8810	6970	3966
	19	27	6569	5337	2130	8431	6547	2189	7906	6350	2634	10340	8193	3576	10000	7935	3680	9490	7349	3662	9150	7292	3966
	22	30	7119	5296	2130	9188	6503	2189	8605	6306	2634	11275	8129	3602	10935	7871	3706	10000	7478	3766	9405	7549	4122
	24	32	7505	5296	2146	9712	6503	2205	9071	6306	2651	11955	8129	3602	11530	7871	3732	10340	7607	3844	9575	7742	4226
1.5+1.8+1.8+ 4.2+5.0	12	18	6073	4753	2083	6975	5886	2139	6567	5733	2564	8470	7356	3472	8215	7099	3576	7790	6577	3558	7535	6520	3862
	14	20	6073	4753	2083	7382	5886	2139	6975	5777	2581	8980	7356	3498	8725	7163	3602	8215	6577	3584	7960	6584	3914
	16	22	6073	4962	2099	7790	5886	2156	7324	5777	2599	9490	7356	3524	9235	7163	3654	8725	6577	3636	8470	6584	3940
	18	25	6403	5212	2114	8198	6283	2172	7674	6130	2616	10000	7871	3550	9660	7614	3654	9150	7028	3662	8810	6970	3966
	19	27	6569	5337	2130	8431	6547	2189	7906	6350	2634	10340	8193	3576	10000	7935	3680	9490	7349	3662	9150	7292	3966
	22	30	7119	5296	2130	9188	6503	2189	8605	6306	2634	11275	8129	3602	10935	7871	3706	10000	7478	3766	9405	7549	4122
	24	32	7505	5296	2146	9712	6503	2205	9071	6306	2651	11955	8129	3602	11530	7871	3732	10340	7607	3844	9575	7742	4226

	INDOOR		OUTDOOR TEMPERATURE (°CDB)																				
	EWB	EDB	-10			21			27			32			35			40			43		
	°C	°C	TC	SHC	PI	TC	SHC	PI	TC	SHC	PI	TC	SHC	PI	TC	SHC	PI	TC	SHC	PI	TC	SHC	PI
1.5+1.8+1.8+4.2+6.0	12	18	6073	4753	2403	6975	5886	2659	6567	5733	2884	8470	7356	3792	8215	7099	3896	7790	6577	4078	7535	6520	4182
	14	20	6073	4753	2403	7382	5886	2659	6975	5777	2901	8980	7356	3818	8725	7163	3922	8215	6577	4104	7960	6584	4234
	16	22	6073	4962	2419	7790	5886	2676	7324	5777	2919	9490	7356	3844	9235	7163	3974	8725	6577	4156	8470	6584	4260
	18	25	6403	5212	2434	8198	6283	2692	7674	6130	2936	10000	7871	3870	9660	7614	3974	9150	7028	4182	8810	6970	4286
	19	27	6569	5337	2450	8431	6547	2709	7906	6350	2954	10340	8193	3896	10000	7935	4000	9490	7349	4182	9150	7292	4286
	22	30	7119	5296	2450	9188	6503	2709	8605	6306	2954	11275	8129	3922	10935	7871	4026	10000	7478	4286	9405	7549	4442
	24	32	7505	5296	2466	9712	6503	2725	9071	6306	2971	11955	8129	3922	11530	7871	4052	10340	7607	4364	9575	7742	4546
1.5+1.8+1.8+5.0+5.0	12	18	6073	4753	2403	6975	5886	2659	6567	5733	2884	8470	7356	3792	8215	7099	3896	7790	6577	4078	7535	6520	4182
	14	20	6073	4753	2403	7382	5886	2659	6975	5777	2901	8980	7356	3818	8725	7163	3922	8215	6577	4104	7960	6584	4234
	16	22	6073	4962	2419	7790	5886	2676	7324	5777	2919	9490	7356	3844	9235	7163	3974	8725	6577	4156	8470	6584	4260
	18	25	6403	5212	2434	8198	6283	2692	7674	6130	2936	10000	7871	3870	9660	7614	3974	9150	7028	4182	8810	6970	4286
	19	27	6569	5337	2450	8431	6547	2709	7906	6350	2954	10340	8193	3896	10000	7935	4000	9490	7349	4182	9150	7292	4286
	22	30	7119	5296	2450	9188	6503	2709	8605	6306	2954	11275	8129	3922	10935	7871	4026	10000	7478	4286	9405	7549	4442
	24	32	7505	5296	2466	9712	6503	2725	9071	6306	2971	11955	8129	3922	11530	7871	4052	10340	7607	4364	9575	7742	4546
1.5+1.8+1.8+5.0+6.0	12	18	6073	4753	2403	6975	5886	2659	6567	5733	2884	8470	7356	3792	8215	7099	3896	7790	6577	4078	7535	6520	4182
	14	20	6073	4753	2403	7382	5886	2659	6975	5777	2901	8980	7356	3818	8725	7163	3922	8215	6577	4104	7960	6584	4234
	16	22	6073	4962	2419	7790	5886	2676	7324	5777	2919	9490	7356	3844	9235	7163	3974	8725	6577	4156	8470	6584	4260
	18	25	6403	5212	2434	8198	6283	2692	7674	6130	2936	10000	7871	3870	9660	7614	3974	9150	7028	4182	8810	6970	4286
	19	27	6569	5337	2450	8431	6547	2709	7906	6350	2954	10340	8193	3896	10000	7935	4000	9490	7349	4182	9150	7292	4286
	22	30	7119	5296	2450	9188	6503	2709	8605	6306	2954	11275	8129	3922	10935	7871	4026	10000	7478	4286	9405	7549	4442
	24	32	7505	5296	2466	9712	6503	2725	9071	6306	2971	11955	8129	3922	11530	7871	4052	10340	7607	4364	9575	7742	4546
1.5+1.8+2.5+2.5+2.5	12	18	6073	4753	1403	6975	5886	1659	6567	5733	1884	8470	7356	2792	8215	7099	2896	7790	6577	3078	7535	6520	3182
	14	20	6073	4753	1403	7382	5886	1659	6975	5777	1901	8980	7356	2818	8725	7163	2922	8215	6577	3104	7960	6584	3234
	16	22	6073	4962	1419	7790	5886	1676	7324	5777	1919	9490	7356	2844	9235	7163	2974	8725	6577	3156	8470	6584	3260
	18	25	6403	5212	1434	8198	6283	1692	7674	6130	1936	10000	7871	2870	9660	7614	2974	9150	7028	3182	8810	6970	3286
	19	27	6569	5337	1450	8431	6547	1709	7906	6350	1954	10340	8193	2896	10000	7935	3000	9490	7349	3182	9150	7292	3286
	22	30	7119	5296	1450	9188	6503	1709	8605	6306	1954	11275	8129	2922	10935	7871	3026	10000	7478	3286	9405	7549	3442
	24	32	7505	5296	1466	9712	6503	1725	9071	6306	1971	11955	8129	2922	11530	7871	3052	10340	7607	3364	9575	7742	3546
1.5+1.8+2.5+2.5+3.5	12	18	6073	4753	1403	6975	5886	1659	6567	5733	1884	8470	7356	2792	8215	7099	2896	7790	6577	3078	7535	6520	3182
	14	20	6073	4753	1403	7382	5886	1659	6975	5777	1901	8980	7356	2818	8725	7163	2922	8215	6577	3104	7960	6584	3234
	16	22	6073	4962	1419	7790	5886	1676	7324	5777	1919	9490	7356	2844	9235	7163	2974	8725	6577	3156	8470	6584	3260
	18	25	6403	5212	1434	8198	6283	1692	7674	6130	1936	10000	7871	2870	9660	7614	2974	9150	7028	3182	8810	6970	3286
	19	27	6569	5337	1450	8431	6547	1709	7906	6350	1954	10340	8193	2896	10000	7935	3000	9490	7349	3182	9150	7292	3286
	22	30	7119	5296	1450	9188	6503	1709	8605	6306	1954	11275	8129	2922	10935	7871	3026	10000	7478	3286	9405	7549	3442
	24	32	7505	5296	1466	9712	6503	1725	9071	6306	1971	11955	8129	2922	11530	7871	3052	10340	7607	3364	9575	7742	3546
1.5+1.8+2.5+2.5+4.2	12	18	6073	4753	1663	6975	5886	1919	6567	5733	2144	8470	7356	3052	8215	7099	3156	7790	6577	3338	7535	6520	3442
	14	20	6073	4753	1663	7382	5886	1919	6975	5777	2161	8980	7356	3078	8725	7163	3182	8215	6577	3364	7960	6584	3494
	16	22	6073	4962	1679	7790	5886	1936	7324	5777	2179	9490	7356	3104	9235	7163	3234	8725	6577	3416	8470	6584	3520
	18	25	6403	5212	1694	8198	6283	1952	7674	6130	2196	10000	7871	3130	9660	7614	3234	9150	7028	3442	8810	6970	3546
	19	27	6569	5337	1710	8431	6547	1969	7906	6350	2214	10340	8193	3156	10000	7935	3260	9490	7349	3442	9150	7292	3546
	22	30	7119	5296	1710	9188	6503	1969	8605	6306	2214	11275	8129	3182	10935	7871	3286	10000	7478	3546	9405	7549	3702
	24	32	7505	5296	1726	9712	6503	1985	9071	6306	2231	11955	8129	3182	11530	7871	3312	10340	7607	3624	9575	7742	3806
1.5+1.8+2.5+2.5+5.0	12	18	6073	4753	2083	6975	5886	2139	6567	5733	2564	8470	7356	3472	8215	7099	3576	7790	6577	3558	7535	6520	3862
	14	20	6073	4753	2083	7382	5886	2139	6975	5777	2581	8980	7356	3498	8725	7163	3602	8215	6577	3584	7960	6584	3914
	16	22	6073	4962	2099	7790	5886	2156	7324	5777	2599	9490	7356	3524	9235	7163	3654	8725	6577	3636	8470	6584	3940
	18	25	6403	5212	2114	8198	6283	2172	7674	6130	2616	10000	7871	3550	9660	7614	3654	9150	7028	3662	8810	6970	3966
	19	27	6569	5337	2130	8431	6547	2189	7906	6350	2634	10340	8193	3576	10000	7935	3680	9490	7349	3662	9150	7292	3966
	22	30	7119	5296	2130	9188	6503	2189	8605	6306	2634	11275	8129	3602	10935	7871	3706	10000	7478	3766	9405	7549	4122
	24	32	7505	5296	2146	9712	6503	2205	9071	6306	2651	11955	8129	3602	11530	7871	3732	10340	7607	3844	9575	7742	4226

	INDOOR		OUTDOOR TEMPERATURE (°CDB)																				
	EWB	EDB	-10			21			27			32			35			40			43		
	°C	°C	TC	SHC	PI	TC	SHC	PI	TC	SHC	PI	TC	SHC	PI	TC	SHC	PI	TC	SHC	PI	TC	SHC	PI
1.5+1.8+2.5+ 2.5+6.0	12	18	6073	4753	2083	6975	5886	2139	6567	5733	2564	8470	7356	3472	8215	7099	3576	7790	6577	3558	7535	6520	3862
	14	20	6073	4753	2083	7382	5886	2139	6975	5777	2581	8980	7356	3498	8725	7163	3602	8215	6577	3584	7960	6584	3914
	16	22	6073	4962	2099	7790	5886	2156	7324	5777	2599	9490	7356	3524	9235	7163	3654	8725	6577	3636	8470	6584	3940
	18	25	6403	5212	2114	8198	6283	2172	7674	6130	2616	10000	7871	3550	9660	7614	3654	9150	7028	3662	8810	6970	3966
	19	27	6569	5337	2130	8431	6547	2189	7906	6350	2634	10340	8193	3576	10000	7935	3680	9490	7349	3662	9150	7292	3966
	22	30	7119	5296	2130	9188	6503	2189	8605	6306	2634	11275	8129	3602	10935	7871	3706	10000	7478	3766	9405	7549	4122
	24	32	7505	5296	2146	9712	6503	2205	9071	6306	2651	11955	8129	3602	11530	7871	3732	10340	7607	3844	9575	7742	4226
1.5+1.8+2.5+ 3.5+3.5	12	18	6073	4753	2083	6975	5886	2139	6567	5733	2564	8470	7356	3472	8215	7099	3576	7790	6577	3558	7535	6520	3862
	14	20	6073	4753	2083	7382	5886	2139	6975	5777	2581	8980	7356	3498	8725	7163	3602	8215	6577	3584	7960	6584	3914
	16	22	6073	4962	2099	7790	5886	2156	7324	5777	2599	9490	7356	3524	9235	7163	3654	8725	6577	3636	8470	6584	3940
	18	25	6403	5212	2114	8198	6283	2172	7674	6130	2616	10000	7871	3550	9660	7614	3654	9150	7028	3662	8810	6970	3966
	19	27	6569	5337	2130	8431	6547	2189	7906	6350	2634	10340	8193	3576	10000	7935	3680	9490	7349	3662	9150	7292	3966
	22	30	7119	5296	2130	9188	6503	2189	8605	6306	2634	11275	8129	3602	10935	7871	3706	10000	7478	3766	9405	7549	4122
	24	32	7505	5296	2146	9712	6503	2205	9071	6306	2651	11955	8129	3602	11530	7871	3732	10340	7607	3844	9575	7742	4226
1.5+1.8+2.5+ 3.5+4.2	12	18	6073	4753	2083	6975	5886	2139	6567	5733	2564	8470	7356	3472	8215	7099	3576	7790	6577	3558	7535	6520	3862
	14	20	6073	4753	2083	7382	5886	2139	6975	5777	2581	8980	7356	3498	8725	7163	3602	8215	6577	3584	7960	6584	3914
	16	22	6073	4962	2099	7790	5886	2156	7324	5777	2599	9490	7356	3524	9235	7163	3654	8725	6577	3636	8470	6584	3940
	18	25	6403	5212	2114	8198	6283	2172	7674	6130	2616	10000	7871	3550	9660	7614	3654	9150	7028	3662	8810	6970	3966
	19	27	6569	5337	2130	8431	6547	2189	7906	6350	2634	10340	8193	3576	10000	7935	3680	9490	7349	3662	9150	7292	3966
	22	30	7119	5296	2130	9188	6503	2189	8605	6306	2634	11275	8129	3602	10935	7871	3706	10000	7478	3766	9405	7549	4122
	24	32	7505	5296	2146	9712	6503	2205	9071	6306	2651	11955	8129	3602	11530	7871	3732	10340	7607	3844	9575	7742	4226
1.5+1.8+2.5+ 3.5+5.0	12	18	6073	4753	2403	6975	5886	2659	6567	5733	2884	8470	7356	3792	8215	7099	3896	7790	6577	4078	7535	6520	4182
	14	20	6073	4753	2403	7382	5886	2659	6975	5777	2901	8980	7356	3818	8725	7163	3922	8215	6577	4104	7960	6584	4234
	16	22	6073	4962	2419	7790	5886	2676	7324	5777	2919	9490	7356	3844	9235	7163	3974	8725	6577	4156	8470	6584	4260
	18	25	6403	5212	2434	8198	6283	2692	7674	6130	2936	10000	7871	3870	9660	7614	3974	9150	7028	4182	8810	6970	4286
	19	27	6569	5337	2450	8431	6547	2709	7906	6350	2954	10340	8193	3896	10000	7935	4000	9490	7349	4182	9150	7292	4286
	22	30	7119	5296	2450	9188	6503	2709	8605	6306	2954	11275	8129	3922	10935	7871	4026	10000	7478	4286	9405	7549	4442
	24	32	7505	5296	2466	9712	6503	2725	9071	6306	2971	11955	8129	3922	11530	7871	4052	10340	7607	4364	9575	7742	4546
1.5+1.8+2.5+ 3.5+6.0	12	18	6073	4753	2403	6975	5886	2659	6567	5733	2884	8470	7356	3792	8215	7099	3896	7790	6577	4078	7535	6520	4182
	14	20	6073	4753	2403	7382	5886	2659	6975	5777	2901	8980	7356	3818	8725	7163	3922	8215	6577	4104	7960	6584	4234
	16	22	6073	4962	2419	7790	5886	2676	7324	5777	2919	9490	7356	3844	9235	7163	3974	8725	6577	4156	8470	6584	4260
	18	25	6403	5212	2434	8198	6283	2692	7674	6130	2936	10000	7871	3870	9660	7614	3974	9150	7028	4182	8810	6970	4286
	19	27	6569	5337	2450	8431	6547	2709	7906	6350	2954	10340	8193	3896	10000	7935	4000	9490	7349	4182	9150	7292	4286
	22	30	7119	5296	2450	9188	6503	2709	8605	6306	2954	11275	8129	3922	10935	7871	4026	10000	7478	4286	9405	7549	4442
	24	32	7505	5296	2466	9712	6503	2725	9071	6306	2971	11955	8129	3922	11530	7871	4052	10340	7607	4364	9575	7742	4546
1.5+1.8+2.5+ 4.2+4.2	12	18	6073	4753	2403	6975	5886	2659	6567	5733	2884	8470	7356	3792	8215	7099	3896	7790	6577	4078	7535	6520	4182
	14	20	6073	4753	2403	7382	5886	2659	6975	5777	2901	8980	7356	3818	8725	7163	3922	8215	6577	4104	7960	6584	4234
	16	22	6073	4962	2419	7790	5886	2676	7324	5777	2919	9490	7356	3844	9235	7163	3974	8725	6577	4156	8470	6584	4260
	18	25	6403	5212	2434	8198	6283	2692	7674	6130	2936	10000	7871	3870	9660	7614	3974	9150	7028	4182	8810	6970	4286
	19	27	6569	5337	2450	8431	6547	2709	7906	6350	2954	10340	8193	3896	10000	7935	4000	9490	7349	4182	9150	7292	4286
	22	30	7119	5296	2450	9188	6503	2709	8605	6306	2954	11275	8129	3922	10935	7871	4026	10000	7478	4286	9405	7549	4442
	24	32	7505	5296	2466	9712	6503	2725	9071	6306	2971	11955	8129	3922	11530	7871	4052	10340	7607	4364	9575	7742	4546

	INDOOR		OUTDOOR TEMPERATURE (°CDB)																				
	EWB	EDB	-10			21			27			32			35			40			43		
	°C	°C	TC	SHC	PI	TC	SHC	PI	TC	SHC	PI	TC	SHC	PI	TC	SHC	PI	TC	SHC	PI	TC	SHC	PI
1.5+1.8+2.5+ 4.2+5.0	12	18	6073	4753	2403	6975	5886	2659	6567	5733	2884	8470	7356	3792	8215	7099	3896	7790	6577	4078	7535	6520	4182
	14	20	6073	4753	2403	7382	5886	2659	6975	5777	2901	8980	7356	3818	8725	7163	3922	8215	6577	4104	7960	6584	4234
	16	22	6073	4962	2419	7790	5886	2676	7324	5777	2919	9490	7356	3844	9235	7163	3974	8725	6577	4156	8470	6584	4260
	18	25	6403	5212	2434	8198	6283	2692	7674	6130	2936	10000	7871	3870	9660	7614	3974	9150	7028	4182	8810	6970	4286
	19	27	6569	5337	2450	8431	6547	2709	7906	6350	2954	10340	8193	3896	10000	7935	4000	9490	7349	4182	9150	7292	4286
	22	30	7119	5296	2450	9188	6503	2709	8605	6306	2954	11275	8129	3922	10935	7871	4026	10000	7478	4286	9405	7549	4442
	24	32	7505	5296	2466	9712	6503	2725	9071	6306	2971	11955	8129	3922	11530	7871	4052	10340	7607	4364	9575	7742	4546
1.5+1.8+2.5+ 4.2+6.0	12	18	6073	4753	2403	6975	5886	2659	6567	5733	2884	8470	7356	3792	8215	7099	3896	7790	6577	4078	7535	6520	4182
	14	20	6073	4753	2403	7382	5886	2659	6975	5777	2901	8980	7356	3818	8725	7163	3922	8215	6577	4104	7960	6584	4234
	16	22	6073	4962	2419	7790	5886	2676	7324	5777	2919	9490	7356	3844	9235	7163	3974	8725	6577	4156	8470	6584	4260
	18	25	6403	5212	2434	8198	6283	2692	7674	6130	2936	10000	7871	3870	9660	7614	3974	9150	7028	4182	8810	6970	4286
	19	27	6569	5337	2450	8431	6547	2709	7906	6350	2954	10340	8193	3896	10000	7935	4000	9490	7349	4182	9150	7292	4286
	22	30	7119	5296	2450	9188	6503	2709	8605	6306	2954	11275	8129	3922	10935	7871	4026	10000	7478	4286	9405	7549	4442
	24	32	7505	5296	2466	9712	6503	2725	9071	6306	2971	11955	8129	3922	11530	7871	4052	10340	7607	4364	9575	7742	4546
1.5+1.8+3.5+ 3.5+3.5	12	18	6073	4753	2403	6975	5886	2659	6567	5733	2884	8470	7356	3792	8215	7099	3896	7790	6577	4078	7535	6520	4182
	14	20	6073	4753	2403	7382	5886	2659	6975	5777	2901	8980	7356	3818	8725	7163	3922	8215	6577	4104	7960	6584	4234
	16	22	6073	4962	2419	7790	5886	2676	7324	5777	2919	9490	7356	3844	9235	7163	3974	8725	6577	4156	8470	6584	4260
	18	25	6403	5212	2434	8198	6283	2692	7674	6130	2936	10000	7871	3870	9660	7614	3974	9150	7028	4182	8810	6970	4286
	19	27	6569	5337	2450	8431	6547	2709	7906	6350	2954	10340	8193	3896	10000	7935	4000	9490	7349	4182	9150	7292	4286
	22	30	7119	5296	2450	9188	6503	2709	8605	6306	2954	11275	8129	3922	10935	7871	4026	10000	7478	4286	9405	7549	4442
	24	32	7505	5296	2466	9712	6503	2725	9071	6306	2971	11955	8129	3922	11530	7871	4052	10340	7607	4364	9575	7742	4546
1.5+1.8+3.5+ 3.5+4.2	12	18	6073	4753	2403	6975	5886	2659	6567	5733	2884	8470	7356	3792	8215	7099	3896	7790	6577	4078	7535	6520	4182
	14	20	6073	4753	2403	7382	5886	2659	6975	5777	2901	8980	7356	3818	8725	7163	3922	8215	6577	4104	7960	6584	4234
	16	22	6073	4962	2419	7790	5886	2676	7324	5777	2919	9490	7356	3844	9235	7163	3974	8725	6577	4156	8470	6584	4260
	18	25	6403	5212	2434	8198	6283	2692	7674	6130	2936	10000	7871	3870	9660	7614	3974	9150	7028	4182	8810	6970	4286
	19	27	6569	5337	2450	8431	6547	2709	7906	6350	2954	10340	8193	3896	10000	7935	4000	9490	7349	4182	9150	7292	4286
	22	30	7119	5296	2450	9188	6503	2709	8605	6306	2954	11275	8129	3922	10935	7871	4026	10000	7478	4286	9405	7549	4442
	24	32	7505	5296	2466	9712	6503	2725	9071	6306	2971	11955	8129	3922	11530	7871	4052	10340	7607	4364	9575	7742	4546
1.5+1.8+3.5+ 3.5+5.0	12	18	6073	4753	2403	6975	5886	2659	6567	5733	2884	8470	7356	3792	8215	7099	3896	7790	6577	4078	7535	6520	4182
	14	20	6073	4753	2403	7382	5886	2659	6975	5777	2901	8980	7356	3818	8725	7163	3922	8215	6577	4104	7960	6584	4234
	16	22	6073	4962	2419	7790	5886	2676	7324	5777	2919	9490	7356	3844	9235	7163	3974	8725	6577	4156	8470	6584	4260
	18	25	6403	5212	2434	8198	6283	2692	7674	6130	2936	10000	7871	3870	9660	7614	3974	9150	7028	4182	8810	6970	4286
	19	27	6569	5337	2450	8431	6547	2709	7906	6350	2954	10340	8193	3896	10000	7935	4000	9490	7349	4182	9150	7292	4286
	22	30	7119	5296	2450	9188	6503	2709	8605	6306	2954	11275	8129	3922	10935	7871	4026	10000	7478	4286	9405	7549	4442
	24	32	7505	5296	2466	9712	6503	2725	9071	6306	2971	11955	8129	3922	11530	7871	4052	10340	7607	4364	9575	7742	4546
1.5+2.5+2.5+ 2.5+2.5	12	18	6073	4753	1403	6975	5886	1659	6567	5733	1884	8470	7356	2792	8215	7099	2896	7790	6577	3078	7535	6520	3182
	14	20	6073	4753	1403	7382	5886	1659	6975	5777	1901	8980	7356	2818	8725	7163	2922	8215	6577	3104	7960	6584	3234
	16	22	6073	4962	1419	7790	5886	1676	7324	5777	1919	9490	7356	2844	9235	7163	2974	8725	6577	3156	8470	6584	3260
	18	25	6403	5212	1434	8198	6283	1692	7674	6130	1936	10000	7871	2870	9660	7614	2974	9150	7028	3182	8810	6970	3286
	19	27	6569	5337	1450	8431	6547	1709	7906	6350	1954	10340	8193	2896	10000	7935	3000	9490	7349	3182	9150	7292	3286
	22	30	7119	5296	1450	9188	6503	1709	8605	6306	1954	11275	8129	2922	10935	7871	3026	10000	7478	3286	9405	7549	3442
	24	32	7505	5296	1466	9712	6503	1725	9071	6306	1971	11955	8129	2922	11530	7871	3052	10340	7607	3364	9575	7742	3546

	INDOOR		OUTDOOR TEMPERATURE (°CDB)																				
	EWB	EDB	-10			21			27			32			35			40			43		
	°C	°C	TC	SHC	PI	TC	SHC	PI	TC	SHC	PI	TC	SHC	PI	TC	SHC	PI	TC	SHC	PI	TC	SHC	PI
1.5+2.5+2.5+ 2.5+3.5	12	18	6073	4753	1403	6975	5886	1659	6567	5733	1884	8470	7356	2792	8215	7099	2896	7790	6577	3078	7535	6520	3182
	14	20	6073	4753	1403	7382	5886	1659	6975	5777	1901	8980	7356	2818	8725	7163	2922	8215	6577	3104	7960	6584	3234
	16	22	6073	4962	1419	7790	5886	1676	7324	5777	1919	9490	7356	2844	9235	7163	2974	8725	6577	3156	8470	6584	3260
	18	25	6403	5212	1434	8198	6283	1692	7674	6130	1936	10000	7871	2870	9660	7614	2974	9150	7028	3182	8810	6970	3286
	19	27	6569	5337	1450	8431	6547	1709	7906	6350	1954	10340	8193	2896	10000	7935	3000	9490	7349	3182	9150	7292	3286
	22	30	7119	5296	1450	9188	6503	1709	8605	6306	1954	11275	8129	2922	10935	7871	3026	10000	7478	3286	9405	7549	3442
	24	32	7505	5296	1466	9712	6503	1725	9071	6306	1971	11955	8129	2922	11530	7871	3052	10340	7607	3364	9575	7742	3546
1.5+2.5+2.5+ 2.5+4.2	12	18	6073	4753	1663	6975	5886	1919	6567	5733	2144	8470	7356	3052	8215	7099	3156	7790	6577	3338	7535	6520	3442
	14	20	6073	4753	1663	7382	5886	1919	6975	5777	2161	8980	7356	3078	8725	7163	3182	8215	6577	3364	7960	6584	3494
	16	22	6073	4962	1679	7790	5886	1936	7324	5777	2179	9490	7356	3104	9235	7163	3234	8725	6577	3416	8470	6584	3520
	18	25	6403	5212	1694	8198	6283	1952	7674	6130	2196	10000	7871	3130	9660	7614	3234	9150	7028	3442	8810	6970	3546
	19	27	6569	5337	1710	8431	6547	1969	7906	6350	2214	10340	8193	3156	10000	7935	3260	9490	7349	3442	9150	7292	3546
	22	30	7119	5296	1710	9188	6503	1969	8605	6306	2214	11275	8129	3182	10935	7871	3286	10000	7478	3546	9405	7549	3702
	24	32	7505	5296	1726	9712	6503	1985	9071	6306	2231	11955	8129	3182	11530	7871	3312	10340	7607	3624	9575	7742	3806
1.5+2.5+2.5+ 2.5+5.0	12	18	6073	4753	2083	6975	5886	2139	6567	5733	2564	8470	7356	3472	8215	7099	3576	7790	6577	3558	7535	6520	3862
	14	20	6073	4753	2083	7382	5886	2139	6975	5777	2581	8980	7356	3498	8725	7163	3602	8215	6577	3584	7960	6584	3914
	16	22	6073	4962	2099	7790	5886	2156	7324	5777	2599	9490	7356	3524	9235	7163	3654	8725	6577	3636	8470	6584	3940
	18	25	6403	5212	2114	8198	6283	2172	7674	6130	2616	10000	7871	3550	9660	7614	3654	9150	7028	3662	8810	6970	3966
	19	27	6569	5337	2130	8431	6547	2189	7906	6350	2634	10340	8193	3576	10000	7935	3680	9490	7349	3662	9150	7292	3966
	22	30	7119	5296	2130	9188	6503	2189	8605	6306	2634	11275	8129	3602	10935	7871	3706	10000	7478	3766	9405	7549	4122
	24	32	7505	5296	2146	9712	6503	2205	9071	6306	2651	11955	8129	3602	11530	7871	3732	10340	7607	3844	9575	7742	4226
1.5+2.5+2.5+ 2.5+6.0	12	18	6073	4753	2083	6975	5886	2139	6567	5733	2564	8470	7356	3472	8215	7099	3576	7790	6577	3558	7535	6520	3862
	14	20	6073	4753	2083	7382	5886	2139	6975	5777	2581	8980	7356	3498	8725	7163	3602	8215	6577	3584	7960	6584	3914
	16	22	6073	4962	2099	7790	5886	2156	7324	5777	2599	9490	7356	3524	9235	7163	3654	8725	6577	3636	8470	6584	3940
	18	25	6403	5212	2114	8198	6283	2172	7674	6130	2616	10000	7871	3550	9660	7614	3654	9150	7028	3662	8810	6970	3966
	19	27	6569	5337	2130	8431	6547	2189	7906	6350	2634	10340	8193	3576	10000	7935	3680	9490	7349	3662	9150	7292	3966
	22	30	7119	5296	2130	9188	6503	2189	8605	6306	2634	11275	8129	3602	10935	7871	3706	10000	7478	3766	9405	7549	4122
	24	32	7505	5296	2146	9712	6503	2205	9071	6306	2651	11955	8129	3602	11530	7871	3732	10340	7607	3844	9575	7742	4226
1.5+2.5+2.5+ 3.5+3.5	12	18	6073	4753	2083	6975	5886	2139	6567	5733	2564	8470	7356	3472	8215	7099	3576	7790	6577	3558	7535	6520	3862
	14	20	6073	4753	2083	7382	5886	2139	6975	5777	2581	8980	7356	3498	8725	7163	3602	8215	6577	3584	7960	6584	3914
	16	22	6073	4962	2099	7790	5886	2156	7324	5777	2599	9490	7356	3524	9235	7163	3654	8725	6577	3636	8470	6584	3940
	18	25	6403	5212	2114	8198	6283	2172	7674	6130	2616	10000	7871	3550	9660	7614	3654	9150	7028	3662	8810	6970	3966
	19	27	6569	5337	2130	8431	6547	2189	7906	6350	2634	10340	8193	3576	10000	7935	3680	9490	7349	3662	9150	7292	3966
	22	30	7119	5296	2130	9188	6503	2189	8605	6306	2634	11275	8129	3602	10935	7871	3706	10000	7478	3766	9405	7549	4122
	24	32	7505	5296	2146	9712	6503	2205	9071	6306	2651	11955	8129	3602	11530	7871	3732	10340	7607	3844	9575	7742	4226
1.5+2.5+2.5+ 3.5+4.2	12	18	6073	4753	2083	6975	5886	2139	6567	5733	2564	8470	7356	3472	8215	7099	3576	7790	6577	3558	7535	6520	3862
	14	20	6073	4753	2083	7382	5886	2139	6975	5777	2581	8980	7356	3498	8725	7163	3602	8215	6577	3584	7960	6584	3914
	16	22	6073	4962	2099	7790	5886	2156	7324	5777	2599	9490	7356	3524	9235	7163	3654	8725	6577	3636	8470	6584	3940
	18	25	6403	5212	2114	8198	6283	2172	7674	6130	2616	10000	7871	3550	9660	7614	3654	9150	7028	3662	8810	6970	3966
	19	27	6569	5337	2130	8431	6547	2189	7906	6350	2634	10340	8193	3576	10000	7935	3680	9490	7349	3662	9150	7292	3966
	22	30	7119	5296	2130	9188	6503	2189	8605	6306	2634	11275	8129	3602	10935	7871	3706	10000	7478	3766	9405	7549	4122
	24	32	7505	5296	2146	9712	6503	2205	9071	6306	2651	11955	8129	3602	11530	7871	3732	10340	7607	3844	9575	7742	4226

	INDOOR		OUTDOOR TEMPERATURE (°CDB)																				
	EWB	EDB	-10			21			27			32			35			40			43		
	°C	°C	TC	SHC	PI	TC	SHC	PI	TC	SHC	PI	TC	SHC	PI	TC	SHC	PI	TC	SHC	PI	TC	SHC	PI
1.5+2.5+2.5+ 3.5+5.0	12	18	6073	4753	2403	6975	5886	2659	6567	5733	2884	8470	7356	3792	8215	7099	3896	7790	6577	4078	7535	6520	4182
	14	20	6073	4753	2403	7382	5886	2659	6975	5777	2901	8980	7356	3818	8725	7163	3922	8215	6577	4104	7960	6584	4234
	16	22	6073	4962	2419	7790	5886	2676	7324	5777	2919	9490	7356	3844	9235	7163	3974	8725	6577	4156	8470	6584	4260
	18	25	6403	5212	2434	8198	6283	2692	7674	6130	2936	10000	7871	3870	9660	7614	3974	9150	7028	4182	8810	6970	4286
	19	27	6569	5337	2450	8431	6547	2709	7906	6350	2954	10340	8193	3896	10000	7935	4000	9490	7349	4182	9150	7292	4286
	22	30	7119	5296	2450	9188	6503	2709	8605	6306	2954	11275	8129	3922	10935	7871	4026	10000	7478	4286	9405	7549	4442
	24	32	7505	5296	2466	9712	6503	2725	9071	6306	2971	11955	8129	3922	11530	7871	4052	10340	7607	4364	9575	7742	4546
1.5+2.5+2.5+ 3.5+6.0	12	18	6073	4753	2403	6975	5886	2659	6567	5733	2884	8470	7356	3792	8215	7099	3896	7790	6577	4078	7535	6520	4182
	14	20	6073	4753	2403	7382	5886	2659	6975	5777	2901	8980	7356	3818	8725	7163	3922	8215	6577	4104	7960	6584	4234
	16	22	6073	4962	2419	7790	5886	2676	7324	5777	2919	9490	7356	3844	9235	7163	3974	8725	6577	4156	8470	6584	4260
	18	25	6403	5212	2434	8198	6283	2692	7674	6130	2936	10000	7871	3870	9660	7614	3974	9150	7028	4182	8810	6970	4286
	19	27	6569	5337	2450	8431	6547	2709	7906	6350	2954	10340	8193	3896	10000	7935	4000	9490	7349	4182	9150	7292	4286
	22	30	7119	5296	2450	9188	6503	2709	8605	6306	2954	11275	8129	3922	10935	7871	4026	10000	7478	4286	9405	7549	4442
	24	32	7505	5296	2466	9712	6503	2725	9071	6306	2971	11955	8129	3922	11530	7871	4052	10340	7607	4364	9575	7742	4546
1.5+2.5+2.5+ 4.2+4.2	12	18	6073	4753	2403	6975	5886	2659	6567	5733	2884	8470	7356	3792	8215	7099	3896	7790	6577	4078	7535	6520	4182
	14	20	6073	4753	2403	7382	5886	2659	6975	5777	2901	8980	7356	3818	8725	7163	3922	8215	6577	4104	7960	6584	4234
	16	22	6073	4962	2419	7790	5886	2676	7324	5777	2919	9490	7356	3844	9235	7163	3974	8725	6577	4156	8470	6584	4260
	18	25	6403	5212	2434	8198	6283	2692	7674	6130	2936	10000	7871	3870	9660	7614	3974	9150	7028	4182	8810	6970	4286
	19	27	6569	5337	2450	8431	6547	2709	7906	6350	2954	10340	8193	3896	10000	7935	4000	9490	7349	4182	9150	7292	4286
	22	30	7119	5296	2450	9188	6503	2709	8605	6306	2954	11275	8129	3922	10935	7871	4026	10000	7478	4286	9405	7549	4442
	24	32	7505	5296	2466	9712	6503	2725	9071	6306	2971	11955	8129	3922	11530	7871	4052	10340	7607	4364	9575	7742	4546
1.5+2.5+2.5+ 4.2+5.0	12	18	6073	4753	2403	6975	5886	2659	6567	5733	2884	8470	7356	3792	8215	7099	3896	7790	6577	4078	7535	6520	4182
	14	20	6073	4753	2403	7382	5886	2659	6975	5777	2901	8980	7356	3818	8725	7163	3922	8215	6577	4104	7960	6584	4234
	16	22	6073	4962	2419	7790	5886	2676	7324	5777	2919	9490	7356	3844	9235	7163	3974	8725	6577	4156	8470	6584	4260
	18	25	6403	5212	2434	8198	6283	2692	7674	6130	2936	10000	7871	3870	9660	7614	3974	9150	7028	4182	8810	6970	4286
	19	27	6569	5337	2450	8431	6547	2709	7906	6350	2954	10340	8193	3896	10000	7935	4000	9490	7349	4182	9150	7292	4286
	22	30	7119	5296	2450	9188	6503	2709	8605	6306	2954	11275	8129	3922	10935	7871	4026	10000	7478	4286	9405	7549	4442
	24	32	7505	5296	2466	9712	6503	2725	9071	6306	2971	11955	8129	3922	11530	7871	4052	10340	7607	4364	9575	7742	4546
1.5+2.5+2.5+ 5.0+5.0	12	18	6073	4753	2403	6975	5886	2659	6567	5733	2884	8470	7356	3792	8215	7099	3896	7790	6577	4078	7535	6520	4182
	14	20	6073	4753	2403	7382	5886	2659	6975	5777	2901	8980	7356	3818	8725	7163	3922	8215	6577	4104	7960	6584	4234
	16	22	6073	4962	2419	7790	5886	2676	7324	5777	2919	9490	7356	3844	9235	7163	3974	8725	6577	4156	8470	6584	4260
	18	25	6403	5212	2434	8198	6283	2692	7674	6130	2936	10000	7871	3870	9660	7614	3974	9150	7028	4182	8810	6970	4286
	19	27	6569	5337	2450	8431	6547	2709	7906	6350	2954	10340	8193	3896	10000	7935	4000	9490	7349	4182	9150	7292	4286
	22	30	7119	5296	2450	9188	6503	2709	8605	6306	2954	11275	8129	3922	10935	7871	4026	10000	7478	4286	9405	7549	4442
	24	32	7505	5296	2466	9712	6503	2725	9071	6306	2971	11955	8129	3922	11530	7871	4052	10340	7607	4364	9575	7742	4546
1.5+2.5+3.5+ 3.5+3.5	12	18	6073	4753	2403	6975	5886	2659	6567	5733	2884	8470	7356	3792	8215	7099	3896	7790	6577	4078	7535	6520	4182
	14	20	6073	4753	2403	7382	5886	2659	6975	5777	2901	8980	7356	3818	8725	7163	3922	8215	6577	4104	7960	6584	4234
	16	22	6073	4962	2419	7790	5886	2676	7324	5777	2919	9490	7356	3844	9235	7163	3974	8725	6577	4156	8470	6584	4260
	18	25	6403	5212	2434	8198	6283	2692	7674	6130	2936	10000	7871	3870	9660	7614	3974	9150	7028	4182	8810	6970	4286
	19	27	6569	5337	2450	8431	6547	2709	7906	6350	2954	10340	8193	3896	10000	7935	4000	9490	7349	4182	9150	7292	4286
	22	30	7119	5296	2450	9188	6503	2709	8605	6306	2954	11275	8129	3922	10935	7871	4026	10000	7478	4286	9405	7549	4442
	24	32	7505	5296	2466	9712	6503	2725	9071	6306	2971	11955	8129	3922	11530	7871	4052	10340	7607	4364	9575	7742	4546
1.5+2.5+3.5+ 3.5+4.2	12	18	6073	4753	2403	6975	5886	2659	6567	5733	2884	8470	7356	3792	8215	7099	3896	7790	6577	4078	7535	6520	4182
	14	20	6073	4753	2403	7382	5886	2659	6975	5777	2901	8980	7356	3818	8725	7163	3922	8215	6577	4104	7960	6584	4234
	16	22	6073	4962	2419	7790	5886	2676	7324	5777	2919	9490	7356	3844	9235	7163	3974	8725	6577	4156	8470	6584	4260
	18	25	6403	5212	2434	8198	6283	2692	7674	6130	2936	10000	7871	3870	9660	7614	3974	9150	7028	4182	8810	6970	4286
	19	27	6569	5337	2450	8431	6547	2709	7906	6350	2954	10340	8193	3896	10000	7935	4000	9490	7349	4182	9150	7292	4286
	22	30	7119	5296	2450	9188	6503	2709	8605	6306	2954	11275	8129	3922	10935	7871	4026	10000	7478	4286	9405	7549	4442
	24	32	7505	5296	2466	9712	6503	2725	9071	6306	2971	11955	8129	3922	11530	7871	4052	10340	7607	4364	9575	7742	4546
1.5+2.5+3.5+ 3.5+5.0	12	18	6073	4753	2403	6975	5886	2659	6567	5733	2884	8470	7356	3792	8215	7099	3896	7790	6577	4078	7535	6520	4182
	14	20	6073	4753	2403	7382	5886	2659	6975	5777	2901	8980	7356	3818	8725	7163	3922	8215	6577	4104	7960	6584	4234
	16	22	6073	4962	2419	7790	5886	2676	7324	5777	2919	9490	7356	3844	9235	7163	3974	8725	6577	4156	8470	6584	4260
	18	25	6403	5212	2434	8198	6283	2692	7674	6130	2936	10000	7871	3870	9660	7614	3974	9150	7028	4182	8810	6970	4286
	19	27	6569	5337	2450	8431	6547	2709	7906	6350	2954	10340	8193	3896	10000	7935	4000	9490	7349	4182	9150	7292	4286
	22	30	7119	5296	2450	9188	6503	2709	8605	6306	2954	11275	8129	3922	10935	7871	4026	10000	7478	4286	9405	7549	4442
	24	32	7505	5296	2466	9712	6503	2725	9071	6306	2971	11955	8129	3922	11530	7871	4052	10340	7607	4364	9575	7742	4546
1.5+2.5+3.5+ 4.2+4.2	12	18	6073	4753	2403	6975	5886	2659	6567	5733	2884	8470	7356	3792	8215	7099	3896	7790	6577	4078	7535	6520	4182
	14	20	6073	4753	2403	7382	5886	2659	6975	5777	2901	8980	7356	3818	8725	7163	3922	8215	6577	4104	7960	6584	4234
	16	22	6073	4962	2419	7790	5886	2676	7324	5777	2919	9490	7356	3844	9235	7163	3974	8725	6577	4156	8470	6584	4260
	18	25	6403	5212	2434	8198	6283	2692	7674	6130	2936	10000	7871	3870	9660	7614	3974	9150	7028	4182	8810	6970	4286
	19	27	6569	5337	2450	8431	6547	2709	7906	6350	2954	10340	8193	3896	10000	7935	4000	9490	7349	4182	9150	7292	4286
	22	30	7119	5296	2450	9188	6503	2709	8605	6306	2954	11275	8129	3922	10935	7871	4026	10000	7478	4286	9405	7549	4442
	24	32	7505	5296	2466	9712	6503	2725	9071	6306	2971	11955	8129	3922	11530	7871	4052	10340	7607	4364	9575	7742	4546
1.8+1.8+1.8+ 1.8+1.8	12	18	5073	3653	976	5975	5086	1225	5567	4633	1444	7470	6256	2328	7215	5999	2429	6790	5777	2606	6535	5420	2707
	14	20	5073	3653	976	6382	5086	1225	5975	4677	1461	7980	6256	2353	7725	6063	2454	7215	5777	2631	6960	5484	2758
	16	22	5073	3862	991	6790	5086	1241	6324	4677	1478	8490	6256	2378	8235	6063	2505	7725	5777	2682	7470	5484	2783
	18	25	5403	4112	1007	7198	5483	1257	6674	5030	1495	9000	6771	2404	8660	6514	2505	8150	6228	2707	7810	5870	2808
	19	27	5569	4237	1022	7431	5747	1274	6906	5250	1512	9340	7093	2429	9000	6835	2530	8490	6549	2707	8150	6192	2808
	22	30	6119	4196	1022	8188	5703	1274	7605	5206	1512	10275	7029	2454	9935	6771	2555	9000	6678	2808	8405	6449	2960
	24	32	6505	4196	1037	8712	5703	1290	8071	5206	1529	10955	7029	2454	10530	6771	2581	9340	6807	2884	8575	6642	3061

	INDOOR		OUTDOOR TEMPERATURE (°CDB)																				
	EWB	EDB	-10			21			27			32			35			40			43		
	°C	°C	TC	SHC	PI	TC	SHC	PI	TC	SHC	PI	TC	SHC	PI	TC	SHC	PI	TC	SHC	PI	TC	SHC	PI
1.8+1.8+1.8+ 1.8+2.5	12	18	5373	3953	1038	6675	5986	1303	6267	5333	1535	8170	6956	2475	7915	6699	2582	7490	6677	2771	7235	6120	2878
	14	20	5373	3953	1038	7082	5986	1303	6675	5377	1553	8680	6956	2502	8425	6763	2609	7915	6677	2798	7660	6184	2932
	16	22	5373	4162	1054	7490	5986	1320	7024	5377	1571	9190	6956	2529	8935	6763	2663	8425	6677	2851	8170	6184	2959
	18	25	5703	4412	1070	7898	6383	1337	7374	5730	1590	9700	7471	2556	9360	7214	2663	8850	7128	2878	8510	6570	2986
	19	27	5869	4537	1086	8131	6647	1354	7606	5950	1608	10040	7793	2582	9700	7535	2690	9190	7449	2878	8850	6892	2986
	22	30	6419	4496	1086	8888	6603	1354	8305	5906	1608	10975	7729	2609	10635	7471	2717	9700	7578	2986	9105	7149	3147
	24	32	6805	4496	1103	9412	6603	1371	8771	5906	1626	11655	7729	2609	11230	7471	2744	10040	7707	3067	9275	7342	3255
1.8+1.8+1.8+ 1.8+3.5	12	18	5673	4253	1038	6975	5986	1303	6567	5633	1535	8470	7256	2475	8215	6999	2582	7790	6677	2771	7535	6420	2878
	14	20	5673	4253	1038	7382	5986	1303	6975	5677	1553	8980	7256	2502	8725	7063	2609	8215	6677	2798	7960	6484	2932
	16	22	5673	4462	1054	7790	5986	1320	7324	5677	1571	9490	7256	2529	9235	7063	2663	8725	6677	2851	8470	6484	2959
	18	25	6003	4712	1070	8198	6383	1337	7674	6030	1590	10000	7771	2556	9660	7514	2663	9150	7128	2878	8810	6870	2986
	19	27	6169	4837	1086	8431	6647	1354	7906	6250	1608	10340	8093	2582	10000	7835	2690	9490	7449	2878	9150	7192	2986
	22	30	6719	4796	1086	9188	6603	1354	8605	6206	1608	11275	8029	2609	10935	7771	2717	10000	7578	2986	9405	7449	3147
	24	32	7105	4796	1103	9712	6603	1371	9071	6206	1626	11955	8029	2609	11530	7771	2744	10340	7707	3067	9575	7642	3255
1.8+1.8+1.8+ 1.8+4.2	12	18	6073	4753	1403	6975	5886	1659	6567	5733	1884	8470	7356	2792	8215	7099	2896	7790	6577	3078	7535	6520	3182
	14	20	6073	4753	1403	7382	5886	1659	6975	5777	1901	8980	7356	2818	8725	7163	2922	8215	6577	3104	7960	6584	3234
	16	22	6073	4962	1419	7790	5886	1676	7324	5777	1919	9490	7356	2844	9235	7163	2974	8725	6577	3156	8470	6584	3260
	18	25	6403	5212	1434	8198	6283	1692	7674	6130	1936	10000	7871	2870	9660	7614	2974	9150	7028	3182	8810	6970	3286
	19	27	6569	5337	1450	8431	6547	1709	7906	6350	1954	10340	8193	2896	10000	7935	3000	9490	7349	3182	9150	7292	3286
	22	30	7119	5296	1450	9188	6503	1709	8605	6306	1954	11275	8129	2922	10935	7871	3026	10000	7478	3286	9405	7549	3442
	24	32	7505	5296	1466	9712	6503	1725	9071	6306	1971	11955	8129	2922	11530	7871	3052	10340	7607	3364	9575	7742	3546
1.8+1.8+1.8+ 1.8+5.0	12	18	6073	4753	1663	6975	5886	1919	6567	5733	2144	8470	7356	3052	8215	7099	3156	7790	6577	3338	7535	6520	3442
	14	20	6073	4753	1663	7382	5886	1919	6975	5777	2161	8980	7356	3078	8725	7163	3182	8215	6577	3364	7960	6584	3494
	16	22	6073	4962	1679	7790	5886	1936	7324	5777	2179	9490	7356	3104	9235	7163	3234	8725	6577	3416	8470	6584	3520
	18	25	6403	5212	1694	8198	6283	1952	7674	6130	2196	10000	7871	3130	9660	7614	3234	9150	7028	3442	8810	6970	3546
	19	27	6569	5337	1710	8431	6547	1969	7906	6350	2214	10340	8193	3156	10000	7935	3260	9490	7349	3442	9150	7292	3546
	22	30	7119	5296	1710	9188	6503	1969	8605	6306	2214	11275	8129	3182	10935	7871	3286	10000	7478	3546	9405	7549	3702
	24	32	7505	5296	1726	9712	6503	1985	9071	6306	2231	11955	8129	3182	11530	7871	3312	10340	7607	3624	9575	7742	3806
1.8+1.8+1.8+ 1.8+6.0	12	18	6073	4753	1663	6975	5886	1919	6567	5733	2144	8470	7356	3052	8215	7099	3156	7790	6577	3338	7535	6520	3442
	14	20	6073	4753	1663	7382	5886	1919	6975	5777	2161	8980	7356	3078	8725	7163	3182	8215	6577	3364	7960	6584	3494
	16	22	6073	4962	1679	7790	5886	1936	7324	5777	2179	9490	7356	3104	9235	7163	3234	8725	6577	3416	8470	6584	3520
	18	25	6403	5212	1694	8198	6283	1952	7674	6130	2196	10000	7871	3130	9660	7614	3234	9150	7028	3442	8810	6970	3546
	19	27	6569	5337	1710	8431	6547	1969	7906	6350	2214	10340	8193	3156	10000	7935	3260	9490	7349	3442	9150	7292	3546
	22	30	7119	5296	1710	9188	6503	1969	8605	6306	2214	11275	8129	3182	10935	7871	3286	10000	7478	3546	9405	7549	3702
	24	32	7505	5296	1726	9712	6503	1985	9071	6306	2231	11955	8129	3182	11530	7871	3312	10340	7607	3624	9575	7742	3806
1.8+1.8+1.8+ 2.5+2.5	12	18	5673	4253	1038	6975	5986	1303	6567	5633	1535	8470	7256	2475	8215	6999	2582	7790	6677	2771	7535	6420	2878
	14	20	5673	4253	1038	7382	5986	1303	6975	5677	1553	8980	7256	2502	8725	7063	2609	8215	6677	2798	7960	6484	2932
	16	22	5673	4462	1054	7790	5986	1320	7324	5677	1571	9490	7256	2529	9235	7063	2663	8725	6677	2851	8470	6484	2959
	18	25	6003	4712	1070	8198	6383	1337	7674	6030	1590	10000	7771	2556	9660	7514	2663	9150	7128	2878	8810	6870	2986
	19	27	6169	4837	1086	8431	6647	1354	7906	6250	1608	10340	8093	2582	10000	7835	2690	9490	7449	2878	9150	7192	2986
	22	30	6719	4796	1086	9188	6603	1354	8605	6206	1608	11275	8029	2609	10935	7771	2717	10000	7578	2986	9405	7449	3147
	24	32	7105	4796	1103	9712	6603	1371	9071	6206	1626	11955	8029	2609	11530	7771	2744	10340	7707	3067	9575	7642	3255

	INDOOR		OUTDOOR TEMPERATURE (°CDB)																				
	EWB	EDB	-10			21			27			32			35			40			43		
	°C	°C	TC	SHC	PI	TC	SHC	PI	TC	SHC	PI	TC	SHC	PI	TC	SHC	PI	TC	SHC	PI	TC	SHC	PI
1.8+1.8+1.8+ 2.5+3.5	12	18	6073	4753	1403	6975	5886	1659	6567	5733	1884	8470	7356	2792	8215	7099	2896	7790	6577	3078	7535	6520	3182
	14	20	6073	4753	1403	7382	5886	1659	6975	5777	1901	8980	7356	2818	8725	7163	2922	8215	6577	3104	7960	6584	3234
	16	22	6073	4962	1419	7790	5886	1676	7324	5777	1919	9490	7356	2844	9235	7163	2974	8725	6577	3156	8470	6584	3260
	18	25	6403	5212	1434	8198	6283	1692	7674	6130	1936	10000	7871	2870	9660	7614	2974	9150	7028	3182	8810	6970	3286
	19	27	6569	5337	1450	8431	6547	1709	7906	6350	1954	10340	8193	2896	10000	7935	3000	9490	7349	3182	9150	7292	3286
	22	30	7119	5296	1450	9188	6503	1709	8605	6306	1954	11275	8129	2922	10935	7871	3026	10000	7478	3286	9405	7549	3442
	24	32	7505	5296	1466	9712	6503	1725	9071	6306	1971	11955	8129	2922	11530	7871	3052	10340	7607	3364	9575	7742	3546
1.8+1.8+1.8+ 2.5+4.2	12	18	6073	4753	1663	6975	5886	1919	6567	5733	2144	8470	7356	3052	8215	7099	3156	7790	6577	3338	7535	6520	3442
	14	20	6073	4753	1663	7382	5886	1919	6975	5777	2161	8980	7356	3078	8725	7163	3182	8215	6577	3364	7960	6584	3494
	16	22	6073	4962	1679	7790	5886	1936	7324	5777	2179	9490	7356	3104	9235	7163	3234	8725	6577	3416	8470	6584	3520
	18	25	6403	5212	1694	8198	6283	1952	7674	6130	2196	10000	7871	3130	9660	7614	3234	9150	7028	3442	8810	6970	3546
	19	27	6569	5337	1710	8431	6547	1969	7906	6350	2214	10340	8193	3156	10000	7935	3260	9490	7349	3442	9150	7292	3546
	22	30	7119	5296	1710	9188	6503	1969	8605	6306	2214	11275	8129	3182	10935	7871	3286	10000	7478	3546	9405	7549	3702
	24	32	7505	5296	1726	9712	6503	1985	9071	6306	2231	11955	8129	3182	11530	7871	3312	10340	7607	3624	9575	7742	3806
1.8+1.8+1.8+ 2.5+5.0	12	18	6073	4753	1663	6975	5886	1919	6567	5733	2144	8470	7356	3052	8215	7099	3156	7790	6577	3338	7535	6520	3442
	14	20	6073	4753	1663	7382	5886	1919	6975	5777	2161	8980	7356	3078	8725	7163	3182	8215	6577	3364	7960	6584	3494
	16	22	6073	4962	1679	7790	5886	1936	7324	5777	2179	9490	7356	3104	9235	7163	3234	8725	6577	3416	8470	6584	3520
	18	25	6403	5212	1694	8198	6283	1952	7674	6130	2196	10000	7871	3130	9660	7614	3234	9150	7028	3442	8810	6970	3546
	19	27	6569	5337	1710	8431	6547	1969	7906	6350	2214	10340	8193	3156	10000	7935	3260	9490	7349	3442	9150	7292	3546
	22	30	7119	5296	1710	9188	6503	1969	8605	6306	2214	11275	8129	3182	10935	7871	3286	10000	7478	3546	9405	7549	3702
	24	32	7505	5296	1726	9712	6503	1985	9071	6306	2231	11955	8129	3182	11530	7871	3312	10340	7607	3624	9575	7742	3806
1.8+1.8+1.8+ 2.5+6.0	12	18	6073	4753	2083	6975	5886	2139	6567	5733	2564	8470	7356	3472	8215	7099	3576	7790	6577	3558	7535	6520	3862
	14	20	6073	4753	2083	7382	5886	2139	6975	5777	2581	8980	7356	3498	8725	7163	3602	8215	6577	3584	7960	6584	3914
	16	22	6073	4962	2099	7790	5886	2156	7324	5777	2599	9490	7356	3524	9235	7163	3654	8725	6577	3636	8470	6584	3940
	18	25	6403	5212	2114	8198	6283	2172	7674	6130	2616	10000	7871	3550	9660	7614	3654	9150	7028	3662	8810	6970	3966
	19	27	6569	5337	2130	8431	6547	2189	7906	6350	2634	10340	8193	3576	10000	7935	3680	9490	7349	3662	9150	7292	3966
	22	30	7119	5296	2130	9188	6503	2189	8605	6306	2634	11275	8129	3602	10935	7871	3706	10000	7478	3766	9405	7549	4122
	24	32	7505	5296	2146	9712	6503	2205	9071	6306	2651	11955	8129	3602	11530	7871	3732	10340	7607	3844	9575	7742	4226
1.8+1.8+1.8+ 3.5+3.5	12	18	6073	4753	1663	6975	5886	1919	6567	5733	2144	8470	7356	3052	8215	7099	3156	7790	6577	3338	7535	6520	3442
	14	20	6073	4753	1663	7382	5886	1919	6975	5777	2161	8980	7356	3078	8725	7163	3182	8215	6577	3364	7960	6584	3494
	16	22	6073	4962	1679	7790	5886	1936	7324	5777	2179	9490	7356	3104	9235	7163	3234	8725	6577	3416	8470	6584	3520
	18	25	6403	5212	1694	8198	6283	1952	7674	6130	2196	10000	7871	3130	9660	7614	3234	9150	7028	3442	8810	6970	3546
	19	27	6569	5337	1710	8431	6547	1969	7906	6350	2214	10340	8193	3156	10000	7935	3260	9490	7349	3442	9150	7292	3546
	22	30	7119	5296	1710	9188	6503	1969	8605	6306	2214	11275	8129	3182	10935	7871	3286	10000	7478	3546	9405	7549	3702
	24	32	7505	5296	1726	9712	6503	1985	9071	6306	2231	11955	8129	3182	11530	7871	3312	10340	7607	3624	9575	7742	3806
1.8+1.8+1.8+ 3.5+4.2	12	18	6073	4753	2083	6975	5886	2139	6567	5733	2564	8470	7356	3472	8215	7099	3576	7790	6577	3558	7535	6520	3862
	14	20	6073	4753	2083	7382	5886	2139	6975	5777	2581	8980	7356	3498	8725	7163	3602	8215	6577	3584	7960	6584	3914
	16	22	6073	4962	2099	7790	5886	2156	7324	5777	2599	9490	7356	3524	9235	7163	3654	8725	6577	3636	8470	6584	3940
	18	25	6403	5212	2114	8198	6283	2172	7674	6130	2616	10000	7871	3550	9660	7614	3654	9150	7028	3662	8810	6970	3966
	19	27	6569	5337	2130	8431	6547	2189	7906	6350	2634	10340	8193	3576	10000	7935	3680	9490	7349	3662	9150	7292	3966
	22	30	7119	5296	2130	9188	6503	2189	8605	6306	2634	11275	8129	3602	10935	7871	3706	10000	7478	3766	9405	7549	4122
	24	32	7505	5296	2146	9712	6503	2205	9071	6306	2651	11955	8129	3602	11530	7871	3732	10340	7607	3844	9575	7742	4226

	INDOOR		OUTDOOR TEMPERATURE (°CDB)																				
	EWB	EDB	-10			21			27			32			35			40			43		
	°C	°C	TC	SHC	PI	TC	SHC	PI	TC	SHC	PI	TC	SHC	PI	TC	SHC	PI	TC	SHC	PI	TC	SHC	PI
1.8+1.8+1.8+ 3.5+5.0	12	18	6073	4753	2403	6975	5886	2659	6567	5733	2884	8470	7356	3792	8215	7099	3896	7790	6577	4078	7535	6520	4182
	14	20	6073	4753	2403	7382	5886	2659	6975	5777	2901	8980	7356	3818	8725	7163	3922	8215	6577	4104	7960	6584	4234
	16	22	6073	4962	2419	7790	5886	2676	7324	5777	2919	9490	7356	3844	9235	7163	3974	8725	6577	4156	8470	6584	4260
	18	25	6403	5212	2434	8198	6283	2692	7674	6130	2936	10000	7871	3870	9660	7614	3974	9150	7028	4182	8810	6970	4286
	19	27	6569	5337	2450	8431	6547	2709	7906	6350	2954	10340	8193	3896	10000	7935	4000	9490	7349	4182	9150	7292	4286
	22	30	7119	5296	2450	9188	6503	2709	8605	6306	2954	11275	8129	3922	10935	7871	4026	10000	7478	4286	9405	7549	4442
	24	32	7505	5296	2466	9712	6503	2725	9071	6306	2971	11955	8129	3922	11530	7871	4052	10340	7607	4364	9575	7742	4546
1.8+1.8+1.8+ 3.5+6.0	12	18	6073	4753	2403	6975	5886	2659	6567	5733	2884	8470	7356	3792	8215	7099	3896	7790	6577	4078	7535	6520	4182
	14	20	6073	4753	2403	7382	5886	2659	6975	5777	2901	8980	7356	3818	8725	7163	3922	8215	6577	4104	7960	6584	4234
	16	22	6073	4962	2419	7790	5886	2676	7324	5777	2919	9490	7356	3844	9235	7163	3974	8725	6577	4156	8470	6584	4260
	18	25	6403	5212	2434	8198	6283	2692	7674	6130	2936	10000	7871	3870	9660	7614	3974	9150	7028	4182	8810	6970	4286
	19	27	6569	5337	2450	8431	6547	2709	7906	6350	2954	10340	8193	3896	10000	7935	4000	9490	7349	4182	9150	7292	4286
	22	30	7119	5296	2450	9188	6503	2709	8605	6306	2954	11275	8129	3922	10935	7871	4026	10000	7478	4286	9405	7549	4442
	24	32	7505	5296	2466	9712	6503	2725	9071	6306	2971	11955	8129	3922	11530	7871	4052	10340	7607	4364	9575	7742	4546
1.8+1.8+1.8+ 4.2+4.2	12	18	6073	4753	2083	6975	5886	2139	6567	5733	2564	8470	7356	3472	8215	7099	3576	7790	6577	3558	7535	6520	3862
	14	20	6073	4753	2083	7382	5886	2139	6975	5777	2581	8980	7356	3498	8725	7163	3602	8215	6577	3584	7960	6584	3914
	16	22	6073	4962	2099	7790	5886	2156	7324	5777	2599	9490	7356	3524	9235	7163	3654	8725	6577	3636	8470	6584	3940
	18	25	6403	5212	2114	8198	6283	2172	7674	6130	2616	10000	7871	3550	9660	7614	3654	9150	7028	3662	8810	6970	3966
	19	27	6569	5337	2130	8431	6547	2189	7906	6350	2634	10340	8193	3576	10000	7935	3680	9490	7349	3662	9150	7292	3966
	22	30	7119	5296	2130	9188	6503	2189	8605	6306	2634	11275	8129	3602	10935	7871	3706	10000	7478	3766	9405	7549	4122
	24	32	7505	5296	2146	9712	6503	2205	9071	6306	2651	11955	8129	3602	11530	7871	3732	10340	7607	3844	9575	7742	4226
1.8+1.8+1.8+ 4.2+5.0	12	18	6073	4753	2403	6975	5886	2659	6567	5733	2884	8470	7356	3792	8215	7099	3896	7790	6577	4078	7535	6520	4182
	14	20	6073	4753	2403	7382	5886	2659	6975	5777	2901	8980	7356	3818	8725	7163	3922	8215	6577	4104	7960	6584	4234
	16	22	6073	4962	2419	7790	5886	2676	7324	5777	2919	9490	7356	3844	9235	7163	3974	8725	6577	4156	8470	6584	4260
	18	25	6403	5212	2434	8198	6283	2692	7674	6130	2936	10000	7871	3870	9660	7614	3974	9150	7028	4182	8810	6970	4286
	19	27	6569	5337	2450	8431	6547	2709	7906	6350	2954	10340	8193	3896	10000	7935	4000	9490	7349	4182	9150	7292	4286
	22	30	7119	5296	2450	9188	6503	2709	8605	6306	2954	11275	8129	3922	10935	7871	4026	10000	7478	4286	9405	7549	4442
	24	32	7505	5296	2466	9712	6503	2725	9071	6306	2971	11955	8129	3922	11530	7871	4052	10340	7607	4364	9575	7742	4546
1.8+1.8+1.8+ 4.2+6.0	12	18	6073	4753	2403	6975	5886	2659	6567	5733	2884	8470	7356	3792	8215	7099	3896	7790	6577	4078	7535	6520	4182
	14	20	6073	4753	2403	7382	5886	2659	6975	5777	2901	8980	7356	3818	8725	7163	3922	8215	6577	4104	7960	6584	4234
	16	22	6073	4962	2419	7790	5886	2676	7324	5777	2919	9490	7356	3844	9235	7163	3974	8725	6577	4156	8470	6584	4260
	18	25	6403	5212	2434	8198	6283	2692	7674	6130	2936	10000	7871	3870	9660	7614	3974	9150	7028	4182	8810	6970	4286
	19	27	6569	5337	2450	8431	6547	2709	7906	6350	2954	10340	8193	3896	10000	7935	4000	9490	7349	4182	9150	7292	4286
	22	30	7119	5296	2450	9188	6503	2709	8605	6306	2954	11275	8129	3922	10935	7871	4026	10000	7478	4286	9405	7549	4442
	24	32	7505	5296	2466	9712	6503	2725	9071	6306	2971	11955	8129	3922	11530	7871	4052	10340	7607	4364	9575	7742	4546
1.8+1.8+1.8+ 5.0+5.0	12	18	6073	4753	2403	6975	5886	2659	6567	5733	2884	8470	7356	3792	8215	7099	3896	7790	6577	4078	7535	6520	4182
	14	20	6073	4753	2403	7382	5886	2659	6975	5777	2901	8980	7356	3818	8725	7163	3922	8215	6577	4104	7960	6584	4234
	16	22	6073	4962	2419	7790	5886	2676	7324	5777	2919	9490	7356	3844	9235	7163	3974	8725	6577	4156	8470	6584	4260
	18	25	6403	5212	2434	8198	6283	2692	7674	6130	2936	10000	7871	3870	9660	7614	3974	9150	7028	4182	8810	6970	4286
	19	27	6569	5337	2450	8431	6547	2709	7906	6350	2954	10340	8193	3896	10000	7935	4000	9490	7349	4182	9150	7292	4286
	22	30	7119	5296	2450	9188	6503	2709	8605	6306	2954	11275	8129	3922	10935	7871	4026	10000	7478	4286	9405	7549	4442
	24	32	7505	5296	2466	9712	6503	2725	9071	6306	2971	11955	8129	3922	11530	7871	4052	10340	7607	4364	9575	7742	4546
1.8+1.8+1.8+ 5.0+6.0	12	18	6073	4753	2403	6975	5886	2659	6567	5733	2884	8470	7356	3792	8215	7099	3896	7790	6577	4078	7535	6520	4182
	14	20	6073	4753	2403	7382	5886	2659	6975	5777	2901	8980	7356	3818	8725	7163	3922	8215	6577	4104	7960	6584	4234
	16	22	6073	4962	2419	7790	5886	2676	7324	5777	2919	9490	7356	3844	9235	7163	3974	8725	6577	4156	8470	6584	4260
	18	25	6403	5212	2434	8198	6283	2692	7674	6130	2936	10000	7871	3870	9660	7614	3974	9150	7028	4182	8810	6970	4286
	19	27	6569	5337	2450	8431	6547	2709	7906	6350	2954	10340	8193	3896	10000	7935	4000	9490	7349	4182	9150	7292	4286
	22	30	7119	5296	2450	9188	6503	2709	8605	6306	2954	11275	8129	3922	10935	7871	4026	10000	7478	4286	9405	7549	4442
	24	32	7505	5296	2466	9712	6503	2725	9071	6306	2971	11955	8129	3922	11530	7871	4052	10340	7607	4364	9575	7742	4546
1.8+1.8+2.5+ 2.5+2.5	12	18	6073	4753	1403	6975	5886	1659	6567	5733	1884	8470	7356	2792	8215	7099	2896	7790	6577	3078	7535	6520	3182
	14	20	6073	4753	1403	7382	5886	1659	6975	5777	1901	8980	7356	2818	8725	7163	2922	8215	6577	3104	7960	6584	3234
	16	22	6073	4962	1419	7790	5886	1676	7324	5777	1919	9490	7356	2844	9235	7163	2974	8725	6577	3156	8470	6584	3260
	18	25	6403	5212	1434	8198	6283	1692	7674	6130	1936	10000	7871	2870	9660	7614	2974	9150	7028	3182	8810	6970	3286
	19	27	6569	5337	1450	8431	6547	1709	7906	6350	1954	10340	8193	2896	10000	7935	3000	9490	7349	3182	9150	7292	3286
	22	30	7119	5296	1450	9188	6503	1709	8605	6306	1954	11275	8129	2922	10935	7871	3026	10000	7478	3286	9405	7549	3442
	24	32	7505	5296	1466	9712	6503	1725	9071	6306	1971	11955	8129	2922	11530	7871	3052	10340	7607	3364	9575	7742	3546

	INDOOR		OUTDOOR TEMPERATURE (°CDB)																				
	EWB	EDB	-10			21			27			32			35			40			43		
	°C	°C	TC	SHC	PI	TC	SHC	PI	TC	SHC	PI	TC	SHC	PI	TC	SHC	PI	TC	SHC	PI	TC	SHC	PI
1.8+1.8+2.5+ 2.5+3.5	12	18	6073	4753	1403	6975	5886	1659	6567	5733	1884	8470	7356	2792	8215	7099	2896	7790	6577	3078	7535	6520	3182
	14	20	6073	4753	1403	7382	5886	1659	6975	5777	1901	8980	7356	2818	8725	7163	2922	8215	6577	3104	7960	6584	3234
	16	22	6073	4962	1419	7790	5886	1676	7324	5777	1919	9490	7356	2844	9235	7163	2974	8725	6577	3156	8470	6584	3260
	18	25	6403	5212	1434	8198	6283	1692	7674	6130	1936	10000	7871	2870	9660	7614	2974	9150	7028	3182	8810	6970	3286
	19	27	6569	5337	1450	8431	6547	1709	7906	6350	1954	10340	8193	2896	10000	7935	3000	9490	7349	3182	9150	7292	3286
	22	30	7119	5296	1450	9188	6503	1709	8605	6306	1954	11275	8129	2922	10935	7871	3026	10000	7478	3286	9405	7549	3442
	24	32	7505	5296	1466	9712	6503	1725	9071	6306	1971	11955	8129	2922	11530	7871	3052	10340	7607	3364	9575	7742	3546
1.8+1.8+2.5+ 2.5+4.2	12	18	6073	4753	1663	6975	5886	1919	6567	5733	2144	8470	7356	3052	8215	7099	3156	7790	6577	3338	7535	6520	3442
	14	20	6073	4753	1663	7382	5886	1919	6975	5777	2161	8980	7356	3078	8725	7163	3182	8215	6577	3364	7960	6584	3494
	16	22	6073	4962	1679	7790	5886	1936	7324	5777	2179	9490	7356	3104	9235	7163	3234	8725	6577	3416	8470	6584	3520
	18	25	6403	5212	1694	8198	6283	1952	7674	6130	2196	10000	7871	3130	9660	7614	3234	9150	7028	3442	8810	6970	3546
	19	27	6569	5337	1710	8431	6547	1969	7906	6350	2214	10340	8193	3156	10000	7935	3260	9490	7349	3442	9150	7292	3546
	22	30	7119	5296	1710	9188	6503	1969	8605	6306	2214	11275	8129	3182	10935	7871	3286	10000	7478	3546	9405	7549	3702
	24	32	7505	5296	1726	9712	6503	1985	9071	6306	2231	11955	8129	3182	11530	7871	3312	10340	7607	3624	9575	7742	3806
1.8+1.8+2.5+ 2.5+5.0	12	18	6073	4753	2403	6975	5886	2659	6567	5733	2884	8470	7356	3792	8215	7099	3896	7790	6577	4078	7535	6520	4182
	14	20	6073	4753	2403	7382	5886	2659	6975	5777	2901	8980	7356	3818	8725	7163	3922	8215	6577	4104	7960	6584	4234
	16	22	6073	4962	2419	7790	5886	2676	7324	5777	2919	9490	7356	3844	9235	7163	3974	8725	6577	4156	8470	6584	4260
	18	25	6403	5212	2434	8198	6283	2692	7674	6130	2936	10000	7871	3870	9660	7614	3974	9150	7028	4182	8810	6970	4286
	19	27	6569	5337	2450	8431	6547	2709	7906	6350	2954	10340	8193	3896	10000	7935	4000	9490	7349	4182	9150	7292	4286
	22	30	7119	5296	2450	9188	6503	2709	8605	6306	2954	11275	8129	3922	10935	7871	4026	10000	7478	4286	9405	7549	4442
	24	32	7505	5296	2466	9712	6503	2725	9071	6306	2971	11955	8129	3922	11530	7871	4052	10340	7607	4364	9575	7742	4546
1.8+1.8+2.5+ 2.5+6.0	12	18	6073	4753	2403	6975	5886	2659	6567	5733	2884	8470	7356	3792	8215	7099	3896	7790	6577	4078	7535	6520	4182
	14	20	6073	4753	2403	7382	5886	2659	6975	5777	2901	8980	7356	3818	8725	7163	3922	8215	6577	4104	7960	6584	4234
	16	22	6073	4962	2419	7790	5886	2676	7324	5777	2919	9490	7356	3844	9235	7163	3974	8725	6577	4156	8470	6584	4260
	18	25	6403	5212	2434	8198	6283	2692	7674	6130	2936	10000	7871	3870	9660	7614	3974	9150	7028	4182	8810	6970	4286
	19	27	6569	5337	2450	8431	6547	2709	7906	6350	2954	10340	8193	3896	10000	7935	4000	9490	7349	4182	9150	7292	4286
	22	30	7119	5296	2450	9188	6503	2709	8605	6306	2954	11275	8129	3922	10935	7871	4026	10000	7478	4286	9405	7549	4442
	24	32	7505	5296	2466	9712	6503	2725	9071	6306	2971	11955	8129	3922	11530	7871	4052	10340	7607	4364	9575	7742	4546
1.8+1.8+2.5+ 3.5+3.5	12	18	6073	4753	2083	6975	5886	2139	6567	5733	2564	8470	7356	3472	8215	7099	3576	7790	6577	3558	7535	6520	3862
	14	20	6073	4753	2083	7382	5886	2139	6975	5777	2581	8980	7356	3498	8725	7163	3602	8215	6577	3584	7960	6584	3914
	16	22	6073	4962	2099	7790	5886	2156	7324	5777	2599	9490	7356	3524	9235	7163	3654	8725	6577	3636	8470	6584	3940
	18	25	6403	5212	2114	8198	6283	2172	7674	6130	2616	10000	7871	3550	9660	7614	3654	9150	7028	3662	8810	6970	3966
	19	27	6569	5337	2130	8431	6547	2189	7906	6350	2634	10340	8193	3576	10000	7935	3680	9490	7349	3662	9150	7292	3966
	22	30	7119	5296	2130	9188	6503	2189	8605	6306	2634	11275	8129	3602	10935	7871	3706	10000	7478	3766	9405	7549	4122
	24	32	7505	5296	2146	9712	6503	2205	9071	6306	2651	11955	8129	3602	11530	7871	3732	10340	7607	3844	9575	7742	4226
1.8+1.8+2.5+ 3.5+4.2	12	18	6073	4753	2083	6975	5886	2139	6567	5733	2564	8470	7356	3472	8215	7099	3576	7790	6577	3558	7535	6520	3862
	14	20	6073	4753	2083	7382	5886	2139	6975	5777	2581	8980	7356	3498	8725	7163	3602	8215	6577	3584	7960	6584	3914
	16	22	6073	4962	2099	7790	5886	2156	7324	5777	2599	9490	7356	3524	9235	7163	3654	8725	6577	3636	8470	6584	3940
	18	25	6403	5212	2114	8198	6283	2172	7674	6130	2616	10000	7871	3550	9660	7614	3654	9150	7028	3662	8810	6970	3966
	19	27	6569	5337	2130	8431	6547	2189	7906	6350	2634	10340	8193	3576	10000	7935	3680	9490	7349	3662	9150	7292	3966
	22	30	7119	5296	2130	9188	6503	2189	8605	6306	2634	11275	8129	3602	10935	7871	3706	10000	7478	3766	9405	7549	4122
	24	32	7505	5296	2146	9712	6503	2205	9071	6306	2651	11955	8129	3602	11530	7871	3732	10340	7607	3844	9575	7742	4226

	INDOOR		OUTDOOR TEMPERATURE (°CDB)																				
	EWB	EDB	-10			21			27			32			35			40			43		
	°C	°C	TC	SHC	PI	TC	SHC	PI	TC	SHC	PI	TC	SHC	PI	TC	SHC	PI	TC	SHC	PI	TC	SHC	PI
1.8+1.8+2.5+ 3.5+5.0	12	18	6073	4753	2403	6975	5886	2659	6567	5733	2884	8470	7356	3792	8215	7099	3896	7790	6577	4078	7535	6520	4182
	14	20	6073	4753	2403	7382	5886	2659	6975	5777	2901	8980	7356	3818	8725	7163	3922	8215	6577	4104	7960	6584	4234
	16	22	6073	4962	2419	7790	5886	2676	7324	5777	2919	9490	7356	3844	9235	7163	3974	8725	6577	4156	8470	6584	4260
	18	25	6403	5212	2434	8198	6283	2692	7674	6130	2936	10000	7871	3870	9660	7614	3974	9150	7028	4182	8810	6970	4286
	19	27	6569	5337	2450	8431	6547	2709	7906	6350	2954	10340	8193	3896	10000	7935	4000	9490	7349	4182	9150	7292	4286
	22	30	7119	5296	2450	9188	6503	2709	8605	6306	2954	11275	8129	3922	10935	7871	4026	10000	7478	4286	9405	7549	4442
	24	32	7505	5296	2466	9712	6503	2725	9071	6306	2971	11955	8129	3922	11530	7871	4052	10340	7607	4364	9575	7742	4546
1.8+1.8+2.5+ 3.5+5.0	12	18	6073	4753	2403	6975	5886	2659	6567	5733	2884	8470	7356	3792	8215	7099	3896	7790	6577	4078	7535	6520	4182
	14	20	6073	4753	2403	7382	5886	2659	6975	5777	2901	8980	7356	3818	8725	7163	3922	8215	6577	4104	7960	6584	4234
	16	22	6073	4962	2419	7790	5886	2676	7324	5777	2919	9490	7356	3844	9235	7163	3974	8725	6577	4156	8470	6584	4260
	18	25	6403	5212	2434	8198	6283	2692	7674	6130	2936	10000	7871	3870	9660	7614	3974	9150	7028	4182	8810	6970	4286
	19	27	6569	5337	2450	8431	6547	2709	7906	6350	2954	10340	8193	3896	10000	7935	4000	9490	7349	4182	9150	7292	4286
	22	30	7119	5296	2450	9188	6503	2709	8605	6306	2954	11275	8129	3922	10935	7871	4026	10000	7478	4286	9405	7549	4442
	24	32	7505	5296	2466	9712	6503	2725	9071	6306	2971	11955	8129	3922	11530	7871	4052	10340	7607	4364	9575	7742	4546
1.8+1.8+2.5+ 4.2+4.2	12	18	6073	4753	2403	6975	5886	2659	6567	5733	2884	8470	7356	3792	8215	7099	3896	7790	6577	4078	7535	6520	4182
	14	20	6073	4753	2403	7382	5886	2659	6975	5777	2901	8980	7356	3818	8725	7163	3922	8215	6577	4104	7960	6584	4234
	16	22	6073	4962	2419	7790	5886	2676	7324	5777	2919	9490	7356	3844	9235	7163	3974	8725	6577	4156	8470	6584	4260
	18	25	6403	5212	2434	8198	6283	2692	7674	6130	2936	10000	7871	3870	9660	7614	3974	9150	7028	4182	8810	6970	4286
	19	27	6569	5337	2450	8431	6547	2709	7906	6350	2954	10340	8193	3896	10000	7935	4000	9490	7349	4182	9150	7292	4286
	22	30	7119	5296	2450	9188	6503	2709	8605	6306	2954	11275	8129	3922	10935	7871	4026	10000	7478	4286	9405	7549	4442
	24	32	7505	5296	2466	9712	6503	2725	9071	6306	2971	11955	8129	3922	11530	7871	4052	10340	7607	4364	9575	7742	4546
1.8+1.8+2.5+ 4.2+5.0	12	18	6073	4753	2403	6975	5886	2659	6567	5733	2884	8470	7356	3792	8215	7099	3896	7790	6577	4078	7535	6520	4182
	14	20	6073	4753	2403	7382	5886	2659	6975	5777	2901	8980	7356	3818	8725	7163	3922	8215	6577	4104	7960	6584	4234
	16	22	6073	4962	2419	7790	5886	2676	7324	5777	2919	9490	7356	3844	9235	7163	3974	8725	6577	4156	8470	6584	4260
	18	25	6403	5212	2434	8198	6283	2692	7674	6130	2936	10000	7871	3870	9660	7614	3974	9150	7028	4182	8810	6970	4286
	19	27	6569	5337	2450	8431	6547	2709	7906	6350	2954	10340	8193	3896	10000	7935	4000	9490	7349	4182	9150	7292	4286
	22	30	7119	5296	2450	9188	6503	2709	8605	6306	2954	11275	8129	3922	10935	7871	4026	10000	7478	4286	9405	7549	4442
	24	32	7505	5296	2466	9712	6503	2725	9071	6306	2971	11955	8129	3922	11530	7871	4052	10340	7607	4364	9575	7742	4546
1.8+1.8+2.5+ 4.2+6.0	12	18	6073	4753	2403	6975	5886	2659	6567	5733	2884	8470	7356	3792	8215	7099	3896	7790	6577	4078	7535	6520	4182
	14	20	6073	4753	2403	7382	5886	2659	6975	5777	2901	8980	7356	3818	8725	7163	3922	8215	6577	4104	7960	6584	4234
	16	22	6073	4962	2419	7790	5886	2676	7324	5777	2919	9490	7356	3844	9235	7163	3974	8725	6577	4156	8470	6584	4260
	18	25	6403	5212	2434	8198	6283	2692	7674	6130	2936	10000	7871	3870	9660	7614	3974	9150	7028	4182	8810	6970	4286
	19	27	6569	5337	2450	8431	6547	2709	7906	6350	2954	10340	8193	3896	10000	7935	4000	9490	7349	4182	9150	7292	4286
	22	30	7119	5296	2450	9188	6503	2709	8605	6306	2954	11275	8129	3922	10935	7871	4026	10000	7478	4286	9405	7549	4442
	24	32	7505	5296	2466	9712	6503	2725	9071	6306	2971	11955	8129	3922	11530	7871	4052	10340	7607	4364	9575	7742	4546
1.8+1.8+2.5+ 5.0+5.0	12	18	6073	4753	2403	6975	5886	2659	6567	5733	2884	8470	7356	3792	8215	7099	3896	7790	6577	4078	7535	6520	4182
	14	20	6073	4753	2403	7382	5886	2659	6975	5777	2901	8980	7356	3818	8725	7163	3922	8215	6577	4104	7960	6584	4234
	16	22	6073	4962	2419	7790	5886	2676	7324	5777	2919	9490	7356	3844	9235	7163	3974	8725	6577	4156	8470	6584	4260
	18	25	6403	5212	2434	8198	6283	2692	7674	6130	2936	10000	7871	3870	9660	7614	3974	9150	7028	4182	8810	6970	4286
	19	27	6569	5337	2450	8431	6547	2709	7906	6350	2954	10340	8193	3896	10000	7935	4000	9490	7349	4182	9150	7292	4286
	22	30	7119	5296	2450	9188	6503	2709	8605	6306	2954	11275	8129	3922	10935	7871	4026	10000	7478	4286	9405	7549	4442
	24	32	7505	5296	2466	9712	6503	2725	9071	6306	2971	11955	8129	3922	11530	7871	4052	10340	7607	4364	9575	7742	4546
1.8+1.8+3.5+ 3.5+3.5	12	18	6073	4753	2403	6975	5886	2659	6567	5733	2884	8470	7356	3792	8215	7099	3896	7790	6577	4078	7535	6520	4182
	14	20	6073	4753	2403	7382	5886	2659	6975	5777	2901	8980	7356	3818	8725	7163	3922	8215	6577	4104	7960	6584	4234
	16	22	6073	4962	2419	7790	5886	2676	7324	5777	2919	9490	7356	3844	9235	7163	3974	8725	6577	4156	8470	6584	4260
	18	25	6403	5212	2434	8198	6283	2692	7674	6130	2936	10000	7871	3870	9660	7614	3974	9150	7028	4182	8810	6970	4286
	19	27	6569	5337	2450	8431	6547	2709	7906	6350	2954	10340	8193	3896	10000	7935	4000	9490	7349	4182	9150	7292	4286
	22	30	7119	5296	2450	9188	6503	2709	8605	6306	2954	11275	8129	3922	10935	7871	4026	10000	7478	4286	9405	7549	4442
	24	32	7505	5296	2466	9712	6503	2725	9071	6306	2971	11955	8129	3922	11530	7871	4052	10340	7607	4364	9575	7742	4546
1.8+1.8+3.5+ 3.5+4.2	12	18	6073	4753	2403	6975	5886	2659	6567	5733	2884	8470	7356	3792	8215	7099	3896	7790	6577	4078	7535	6520	4182
	14	20	6073	4753	2403	7382	5886	2659	6975	5777	2901	8980	7356	3818	8725	7163	3922	8215	6577	4104	7960	6584	4234
	16	22	6073	4962	2419	7790	5886	2676	7324	5777	2919	9490	7356	3844	9235	7163	3974	8725	6577	4156	8470	6584	4260
	18	25	6403	5212	2434	8198	6283	2692	7674	6130	2936	10000	7871	3870	9660	7614	3974	9150	7028	4182	8810	6970	4286
	19	27	6569	5337	2450	8431	6547	2709	7906	6350	2954	10340	8193	3896	10000	7935	4000	9490	7349	4182	9150	7292	4286
	22	30	7119	5296	2450	9188	6503	2709	8605	6306	2954	11275	8129	3922	10935	7871	4026	10000	7478	4286	9405	7549	4442
	24	32	7505	5296	2466	9712	6503	2725	9071	6306	2971	11955	8129	3922	11530	7871	4052	10340	7607	4364	9575	7742	4546
1.8+1.8+3.5+ 3.5+5.0	12	18	6073	4753	2403	6975	5886	2659	6567	5733	2884	8470	7356	3792	8215	7099	3896	7790	6577	4078	7535	6520	4182
	14	20	6073	4753	2403	7382	5886	2659	6975	5777	2901	8980	7356	3818	8725	7163	3922	8215	6577	4104	7960	6584	4234
	16	22	6073	4962	2419	7790	5886	2676	7324	5777	2919	9490	7356	3844	9235	7163	3974	8725	6577	4156	8470	6584	4260
	18	25	6403	5212	2434	8198	6283	2692	7674	6130	2936	10000	7871	3870	9660	7614	3974	9150	7028	4182	8810	6970	4286
	19	27	6569	5337	2450	8431	6547	2709	7906	6350	2954	10340	8193	3896	10000	7935	4000	9490	7349	4182	9150	7292	4286
	22	30	7119	5296	2450	9188	6503	2709	8605	6306	2954	11275	8129	3922	10935	7871	4026	10000	7478	4286	9405	7549	4442
	24	32	7505	5296	2466	9712	6503	2725	9071	6306	2971	11955	8129	3922	11530	7871	4052	10340	7607	4364	9575	7742	4546
1.8+1.8+3.5+ 4.2+4.2	12	18	6073	4753	2403	6975	5886	2659	6567	5733	2884	8470	7356	3792	8215	7099	3896	7790	6577	4078	7535	6520	4182
	14	20	6073	4753	2403	7382	5886	2659	6975	5777	2901	8980	7356	3818	8725	7163	3922	8215	6577	4104	7960	6584	4234
	16	22	6073	4962	2419	7790	5886	2676	7324	5777	2919	9490	7356	3844	9235	7163	3974	8725	6577	4156	8470	6584	4260
	18	25	6403	5212	2434	8198	6283	2692	7674	6130	2936	10000	7871	3870	9660	7614	3974	9150	7028	4182	8810	6970	4286
	19	27	6569	5337	2450	8431	6547	2709	7906	6350	2954	10340	8193	3896	10000	7935	4000	9490	7349	4182	9150	7292	4286
	22	30	7119	5296	2450	9188	6503	2709	8605	6306	2954	11275	8129	3922	10935	7871	4026	10000	7478	4286	9405	7549	4442
	24	32	7505	5296	2466	9712	6503	2725	9071	6306	2971	11955	8129	3922	11530	7871	4052	10340	7607	4364	9575	7742	4546
1.8+1.8+3.5+ 4.2+5.0	12	18	6073	4753	2403	6975	5886	2659	6567	5733	2884	8470	7356	3792	8215	7099	3896	7790	6577	4078	7535	6520	4182
	14	20	6073	4753	2403	7382	5886	2659	6975	5777	2901	8980	7356	3818	8725	7163	3922	8215	6577	4104	7960	6584	4234
	16	22	6073	4962	2419	7790	5886	2676	7324	5777	2919	9490	7356	3844	9235	7163	3974	8725	6577	4156	8470	6584	4260
	18	25	6403	5212	2434	8198	6283	2692	7674	6130	2936	10000	7871	3870	9660	7614	3974	9150	7028	4182	8810	6970	4286
	19	27	6569	5337	2450	8431	6547	2709	7906	6350	2954	10340	8193	3896	10000	7935	4000	9490	7349	4182	9150	7292	4286
	22	30	7119	5296	2450	9188	6503	2709	8605	6306	2954	11275	8129	3922	10935	7871	4026	10000	7478	4286	9405	7549	4442
	24	32	7505	5296	2466	9712	6503	2725	9071	6306	2971	11955	8129	3922	11530	7871	4052	10340	7607	4364	9575	7742	4546

	INDOOR		OUTDOOR TEMPERATURE (°CDB)																				
	EWB	EDB	-10			21			27			32			35			40			43		
	°C	°C	TC	SHC	PI	TC	SHC	PI	TC	SHC	PI	TC	SHC	PI	TC	SHC	PI	TC	SHC	PI	TC	SHC	PI
1.8+2.5+2.5+ 2.5+2.5	12	18	6073	4753	1403	6975	5886	1659	6567	5733	1884	8470	7356	2792	8215	7099	2896	7790	6577	3078	7535	6520	3182
	14	20	6073	4753	1403	7382	5886	1659	6975	5777	1901	8980	7356	2818	8725	7163	2922	8215	6577	3104	7960	6584	3234
	16	22	6073	4962	1419	7790	5886	1676	7324	5777	1919	9490	7356	2844	9235	7163	2974	8725	6577	3156	8470	6584	3260
	18	25	6403	5212	1434	8198	6283	1692	7674	6130	1936	10000	7871	2870	9660	7614	2974	9150	7028	3182	8810	6970	3286
	19	27	6569	5337	1450	8431	6547	1709	7906	6350	1954	10340	8193	2896	10000	7935	3000	9490	7349	3182	9150	7292	3286
	22	30	7119	5296	1450	9188	6503	1709	8605	6306	1954	11275	8129	2922	10935	7871	3026	10000	7478	3286	9405	7549	3442
	24	32	7505	5296	1466	9712	6503	1725	9071	6306	1971	11955	8129	2922	11530	7871	3052	10340	7607	3364	9575	7742	3546
1.8+2.5+2.5+ 2.5+3.5	12	18	6073	4753	1403	6975	5886	1659	6567	5733	1884	8470	7356	2792	8215	7099	2896	7790	6577	3078	7535	6520	3182
	14	20	6073	4753	1403	7382	5886	1659	6975	5777	1901	8980	7356	2818	8725	7163	2922	8215	6577	3104	7960	6584	3234
	16	22	6073	4962	1419	7790	5886	1676	7324	5777	1919	9490	7356	2844	9235	7163	2974	8725	6577	3156	8470	6584	3260
	18	25	6403	5212	1434	8198	6283	1692	7674	6130	1936	10000	7871	2870	9660	7614	2974	9150	7028	3182	8810	6970	3286
	19	27	6569	5337	1450	8431	6547	1709	7906	6350	1954	10340	8193	2896	10000	7935	3000	9490	7349	3182	9150	7292	3286
	22	30	7119	5296	1450	9188	6503	1709	8605	6306	1954	11275	8129	2922	10935	7871	3026	10000	7478	3286	9405	7549	3442
	24	32	7505	5296	1466	9712	6503	1725	9071	6306	1971	11955	8129	2922	11530	7871	3052	10340	7607	3364	9575	7742	3546
1.8+2.5+2.5+ 2.5+4.2	12	18	6073	4753	1663	6975	5886	1919	6567	5733	2144	8470	7356	3052	8215	7099	3156	7790	6577	3338	7535	6520	3442
	14	20	6073	4753	1663	7382	5886	1919	6975	5777	2161	8980	7356	3078	8725	7163	3182	8215	6577	3364	7960	6584	3494
	16	22	6073	4962	1679	7790	5886	1936	7324	5777	2179	9490	7356	3104	9235	7163	3234	8725	6577	3416	8470	6584	3520
	18	25	6403	5212	1694	8198	6283	1952	7674	6130	2196	10000	7871	3130	9660	7614	3234	9150	7028	3442	8810	6970	3546
	19	27	6569	5337	1710	8431	6547	1969	7906	6350	2214	10340	8193	3156	10000	7935	3260	9490	7349	3442	9150	7292	3546
	22	30	7119	5296	1710	9188	6503	1969	8605	6306	2214	11275	8129	3182	10935	7871	3286	10000	7478	3546	9405	7549	3702
	24	32	7505	5296	1726	9712	6503	1985	9071	6306	2231	11955	8129	3182	11530	7871	3312	10340	7607	3624	9575	7742	3806
1.8+2.5+2.5+ 2.5+5.0	12	18	6073	4753	2403	6975	5886	2659	6567	5733	2884	8470	7356	3792	8215	7099	3896	7790	6577	4078	7535	6520	4182
	14	20	6073	4753	2403	7382	5886	2659	6975	5777	2901	8980	7356	3818	8725	7163	3922	8215	6577	4104	7960	6584	4234
	16	22	6073	4962	2419	7790	5886	2676	7324	5777	2919	9490	7356	3844	9235	7163	3974	8725	6577	4156	8470	6584	4260
	18	25	6403	5212	2434	8198	6283	2692	7674	6130	2936	10000	7871	3870	9660	7614	3974	9150	7028	4182	8810	6970	4286
	19	27	6569	5337	2450	8431	6547	2709	7906	6350	2954	10340	8193	3896	10000	7935	4000	9490	7349	4182	9150	7292	4286
	22	30	7119	5296	2450	9188	6503	2709	8605	6306	2954	11275	8129	3922	10935	7871	4026	10000	7478	4286	9405	7549	4442
	24	32	7505	5296	2466	9712	6503	2725	9071	6306	2971	11955	8129	3922	11530	7871	4052	10340	7607	4364	9575	7742	4546
1.8+2.5+2.5+ 2.5+6.0	12	18	6073	4753	2403	6975	5886	2659	6567	5733	2884	8470	7356	3792	8215	7099	3896	7790	6577	4078	7535	6520	4182
	14	20	6073	4753	2403	7382	5886	2659	6975	5777	2901	8980	7356	3818	8725	7163	3922	8215	6577	4104	7960	6584	4234
	16	22	6073	4962	2419	7790	5886	2676	7324	5777	2919	9490	7356	3844	9235	7163	3974	8725	6577	4156	8470	6584	4260
	18	25	6403	5212	2434	8198	6283	2692	7674	6130	2936	10000	7871	3870	9660	7614	3974	9150	7028	4182	8810	6970	4286
	19	27	6569	5337	2450	8431	6547	2709	7906	6350	2954	10340	8193	3896	10000	7935	4000	9490	7349	4182	9150	7292	4286
	22	30	7119	5296	2450	9188	6503	2709	8605	6306	2954	11275	8129	3922	10935	7871	4026	10000	7478	4286	9405	7549	4442
	24	32	7505	5296	2466	9712	6503	2725	9071	6306	2971	11955	8129	3922	11530	7871	4052	10340	7607	4364	9575	7742	4546
1.8+2.5+2.5+ 3.5+3.5	12	18	6073	4753	2403	6975	5886	2659	6567	5733	2884	8470	7356	3792	8215	7099	3896	7790	6577	4078	7535	6520	4182
	14	20	6073	4753	2403	7382	5886	2659	6975	5777	2901	8980	7356	3818	8725	7163	3922	8215	6577	4104	7960	6584	4234
	16	22	6073	4962	2419	7790	5886	2676	7324	5777	2919	9490	7356	3844	9235	7163	3974	8725	6577	4156	8470	6584	4260
	18	25	6403	5212	2434	8198	6283	2692	7674	6130	2936	10000	7871	3870	9660	7614	3974	9150	7028	4182	8810	6970	4286
	19	27	6569	5337	2450	8431	6547	2709	7906	6350	2954	10340	8193	3896	10000	7935	4000	9490	7349	4182	9150	7292	4286
	22	30	7119	5296	2450	9188	6503	2709	8605	6306	2954	11275	8129	3922	10935	7871	4026	10000	7478	4286	9405	7549	4442
	24	32	7505	5296	2466	9712	6503	2725	9071	6306	2971	11955	8129	3922	11530	7871	4052	10340	7607	4364	9575	7742	4546

	INDOOR		OUTDOOR TEMPERATURE (°CDB)																				
	EWB	EDB	-10			21			27			32			35			40			43		
	°C	°C	TC	SHC	PI	TC	SHC	PI	TC	SHC	PI	TC	SHC	PI	TC	SHC	PI	TC	SHC	PI	TC	SHC	PI
1.8+2.5+2.5+ 3.5+4.2	12	18	6073	4753	2403	6975	5886	2659	6567	5733	2884	8470	7356	3792	8215	7099	3896	7790	6577	4078	7535	6520	4182
	14	20	6073	4753	2403	7382	5886	2659	6975	5777	2901	8980	7356	3818	8725	7163	3922	8215	6577	4104	7960	6584	4234
	16	22	6073	4962	2419	7790	5886	2676	7324	5777	2919	9490	7356	3844	9235	7163	3974	8725	6577	4156	8470	6584	4260
	18	25	6403	5212	2434	8198	6283	2692	7674	6130	2936	10000	7871	3870	9660	7614	3974	9150	7028	4182	8810	6970	4286
	19	27	6569	5337	2450	8431	6547	2709	7906	6350	2954	10340	8193	3896	10000	7935	4000	9490	7349	4182	9150	7292	4286
	22	30	7119	5296	2450	9188	6503	2709	8605	6306	2954	11275	8129	3922	10935	7871	4026	10000	7478	4286	9405	7549	4442
	24	32	7505	5296	2466	9712	6503	2725	9071	6306	2971	11955	8129	3922	11530	7871	4052	10340	7607	4364	9575	7742	4546
1.8+2.5+2.5+ 3.5+5.0	12	18	6073	4753	2403	6975	5886	2659	6567	5733	2884	8470	7356	3792	8215	7099	3896	7790	6577	4078	7535	6520	4182
	14	20	6073	4753	2403	7382	5886	2659	6975	5777	2901	8980	7356	3818	8725	7163	3922	8215	6577	4104	7960	6584	4234
	16	22	6073	4962	2419	7790	5886	2676	7324	5777	2919	9490	7356	3844	9235	7163	3974	8725	6577	4156	8470	6584	4260
	18	25	6403	5212	2434	8198	6283	2692	7674	6130	2936	10000	7871	3870	9660	7614	3974	9150	7028	4182	8810	6970	4286
	19	27	6569	5337	2450	8431	6547	2709	7906	6350	2954	10340	8193	3896	10000	7935	4000	9490	7349	4182	9150	7292	4286
	22	30	7119	5296	2450	9188	6503	2709	8605	6306	2954	11275	8129	3922	10935	7871	4026	10000	7478	4286	9405	7549	4442
	24	32	7505	5296	2466	9712	6503	2725	9071	6306	2971	11955	8129	3922	11530	7871	4052	10340	7607	4364	9575	7742	4546
1.8+2.5+2.5+ 3.5+6.0	12	18	6073	4753	2403	6975	5886	2659	6567	5733	2884	8470	7356	3792	8215	7099	3896	7790	6577	4078	7535	6520	4182
	14	20	6073	4753	2403	7382	5886	2659	6975	5777	2901	8980	7356	3818	8725	7163	3922	8215	6577	4104	7960	6584	4234
	16	22	6073	4962	2419	7790	5886	2676	7324	5777	2919	9490	7356	3844	9235	7163	3974	8725	6577	4156	8470	6584	4260
	18	25	6403	5212	2434	8198	6283	2692	7674	6130	2936	10000	7871	3870	9660	7614	3974	9150	7028	4182	8810	6970	4286
	19	27	6569	5337	2450	8431	6547	2709	7906	6350	2954	10340	8193	3896	10000	7935	4000	9490	7349	4182	9150	7292	4286
	22	30	7119	5296	2450	9188	6503	2709	8605	6306	2954	11275	8129	3922	10935	7871	4026	10000	7478	4286	9405	7549	4442
	24	32	7505	5296	2466	9712	6503	2725	9071	6306	2971	11955	8129	3922	11530	7871	4052	10340	7607	4364	9575	7742	4546
1.8+2.5+2.5+ 4.2+4.2	12	18	6073	4753	2403	6975	5886	2659	6567	5733	2884	8470	7356	3792	8215	7099	3896	7790	6577	4078	7535	6520	4182
	14	20	6073	4753	2403	7382	5886	2659	6975	5777	2901	8980	7356	3818	8725	7163	3922	8215	6577	4104	7960	6584	4234
	16	22	6073	4962	2419	7790	5886	2676	7324	5777	2919	9490	7356	3844	9235	7163	3974	8725	6577	4156	8470	6584	4260
	18	25	6403	5212	2434	8198	6283	2692	7674	6130	2936	10000	7871	3870	9660	7614	3974	9150	7028	4182	8810	6970	4286
	19	27	6569	5337	2450	8431	6547	2709	7906	6350	2954	10340	8193	3896	10000	7935	4000	9490	7349	4182	9150	7292	4286
	22	30	7119	5296	2450	9188	6503	2709	8605	6306	2954	11275	8129	3922	10935	7871	4026	10000	7478	4286	9405	7549	4442
	24	32	7505	5296	2466	9712	6503	2725	9071	6306	2971	11955	8129	3922	11530	7871	4052	10340	7607	4364	9575	7742	4546
1.8+2.5+2.5+ 4.2+5.0	12	18	6073	4753	2403	6975	5886	2659	6567	5733	2884	8470	7356	3792	8215	7099	3896	7790	6577	4078	7535	6520	4182
	14	20	6073	4753	2403	7382	5886	2659	6975	5777	2901	8980	7356	3818	8725	7163	3922	8215	6577	4104	7960	6584	4234
	16	22	6073	4962	2419	7790	5886	2676	7324	5777	2919	9490	7356	3844	9235	7163	3974	8725	6577	4156	8470	6584	4260
	18	25	6403	5212	2434	8198	6283	2692	7674	6130	2936	10000	7871	3870	9660	7614	3974	9150	7028	4182	8810	6970	4286
	19	27	6569	5337	2450	8431	6547	2709	7906	6350	2954	10340	8193	3896	10000	7935	4000	9490	7349	4182	9150	7292	4286
	22	30	7119	5296	2450	9188	6503	2709	8605	6306	2954	11275	8129	3922	10935	7871	4026	10000	7478	4286	9405	7549	4442
	24	32	7505	5296	2466	9712	6503	2725	9071	6306	2971	11955	8129	3922	11530	7871	4052	10340	7607	4364	9575	7742	4546
1.8+2.5+3.5+ 3.5+3.5	12	18	6073	4753	2403	6975	5886	2659	6567	5733	2884	8470	7356	3792	8215	7099	3896	7790	6577	4078	7535	6520	4182
	14	20	6073	4753	2403	7382	5886	2659	6975	5777	2901	8980	7356	3818	8725	7163	3922	8215	6577	4104	7960	6584	4234
	16	22	6073	4962	2419	7790	5886	2676	7324	5777	2919	9490	7356	3844	9235	7163	3974	8725	6577	4156	8470	6584	4260
	18	25	6403	5212	2434	8198	6283	2692	7674	6130	2936	10000	7871	3870	9660	7614	3974	9150	7028	4182	8810	6970	4286
	19	27	6569	5337	2450	8431	6547	2709	7906	6350	2954	10340	8193	3896	10000	7935	4000	9490	7349	4182	9150	7292	4286
	22	30	7119	5296	2450	9188	6503	2709	8605	6306	2954	11275	8129	3922	10935	7871	4026	10000	7478	4286	9405	7549	4442
	24	32	7505	5296	2466	9712	6503	2725	9071	6306	2971	11955	8129	3922	11530	7871	4052	10340	7607	4364	9575	7742	4546
1.8+2.5+3.5+ 3.5+4.2	12	18	6073	4753	2403	6975	5886	2659	6567	5733	2884	8470	7356	3792	8215	7099	3896	7790	6577	4078	7535	6520	4182
	14	20	6073	4753	2403	7382	5886	2659	6975	5777	2901	8980	7356	3818	8725	7163	3922	8215	6577	4104	7960	6584	4234
	16	22	6073	4962	2419	7790	5886	2676	7324	5777	2919	9490	7356	3844	9235	7163	3974	8725	6577	4156	8470	6584	4260
	18	25	6403	5212	2434	8198	6283	2692	7674	6130	2936	10000	7871	3870	9660	7614	3974	9150	7028	4182	8810	6970	4286
	19	27	6569	5337	2450	8431	6547	2709	7906	6350	2954	10340	8193	3896	10000	7935	4000	9490	7349	4182	9150	7292	4286
	22	30	7119	5296	2450	9188	6503	2709	8605	6306	2954	11275	8129	3922	10935	7871	4026	10000	7478	4286	9405	7549	4442
	24	32	7505	5296	2466	9712	6503	2725	9071	6306	2971	11955	8129	3922	11530	7871	4052	10340	7607	4364	9575	7742	4546
1.8+2.5+3.5+ 3.5+5.0	12	18	6073	4753	2403	6975	5886	2659	6567	5733	2884	8470	7356	3792	8215	7099	3896	7790	6577	4078	7535	6520	4182
	14	20	6073	4753	2403	7382	5886	2659	6975	5777	2901	8980	7356	3818	8725	7163	3922	8215	6577	4104	7960	6584	4234
	16	22	6073	4962	2419	7790	5886	2676	7324	5777	2919	9490	7356	3844	9235	7163	3974	8725	6577	4156	8470	6584	4260
	18	25	6403	5212	2434	8198	6283	2692	7674	6130	2936	10000	7871	3870	9660	7614	3974	9150	7028	4182	8810	6970	4286
	19	27	6569	5337	2450	8431	6547	2709	7906	6350	2954	10340	8193	3896	10000	7935	4000	9490	7349	4182	9150	7292	4286
	22	30	7119	5296	2450	9188	6503	2709	8605	6306	2954	11275	8129	3922	10935	7871	4026	10000	7478	4286	9405	7549	4442
	24	32	7505	5296	2466	9712	6503	2725	9071	6306	2971	11955	8129	3922	11530	7871	4052	10340	7607	4364	9575	7742	4546
1.8+2.5+3.5+ 4.2+4.2	12	18	6073	4753	2403	6975	5886	2659	6567	5733	2884	8470	7356	3792	8215	7099	3896	7790	6577	4078	7535	6520	4182
	14	20	6073	4753	2403	7382	5886	2659	6975	5777	2901	8980	7356	3818	8725	7163	3922	8215	6577	4104	7960	6584	4234
	16	22	6073	4962	2419	7790	5886	2676	7324	5777	2919	9490	7356	3844	9235	7163	3974	8725	6577	4156	8470	6584	4260
	18	25	6403	5212	2434	8198	6283	2692	7674	6130	2936	10000	7871	3870	9660	7614	3974	9150	7028	4182	8810	6970	4286
	19	27	6569	5337	2450	8431	6547	2709	7906	6350	2954	10340	8193	3896	10000	7935	4000	9490	7349	4182	9150	7292	4286
	22	30	7119	5296	2450	9188	6503	2709	8605	6306	2954	11275	8129	3922	10935	7871	4026	10000	7478	4286	9405	7549	4442
	24	32	7505	5296	2466	9712	6503	2725	9071	6306	2971	11955	8129	3922	11530	7871	4052	10340	7607	4364	9575	7742	4546
2.5+2.5+2.5+ 2.5+2.5	12	18	6073	4753	2403	6975	5886	2659	6567	5733	2884	8470	7356	3792	8215	7099	3896	7790	6577	4078	7535	6520	4182
	14	20	6073	4753	2403	7382	5886	2659	6975	5777	2901	8980	7356	3818	8725	7163	3922	8215	6577	4104	7960	6584	4234
	16	22	6073	4962	2419	7790	5886	2676	7324	5777	2919	9490	7356	3844	9235	7163	3974	8725	6577	4156	8470	6584	4260
	18	25	6403	5212	2434	8198	6283	2692	7674	6130	2936	10000	7871	3870	9660	7614	3974	9150	7028	4182	8810	6970	4286
	19	27	6569	5337	2450	8431	6547	2709	7906	6350	2954	10340	8193	3896	10000	7935	4000	9490	7349	4182	9150	7292	4286
	22	30	7119	5296	2450	9188	6503	2709	8605	6306	2954	11275	8129	3922	10935	7871	4026	10000	7478	4286	9405	7549	4442
	24	32	7505	5296	2466	9712	6503	2725	9071	6306	2971	11955	8129	3922	11530	7871	4052	10340	7607	4364	9575	7742	4546

	INDOOR		OUTDOOR TEMPERATURE (°CDB)																				
	EWB	EDB	-10			21			27			32			35			40			43		
	°C	°C	TC	SHC	PI	TC	SHC	PI	TC	SHC	PI	TC	SHC	PI	TC	SHC	PI	TC	SHC	PI	TC	SHC	PI
2.5+2.5+2.5+ 2.5+3.5	12	18	6073	4753	2403	6975	5886	2659	6567	5733	2884	8470	7356	3792	8215	7099	3896	7790	6577	4078	7535	6520	4182
	14	20	6073	4753	2403	7382	5886	2659	6975	5777	2901	8980	7356	3818	8725	7163	3922	8215	6577	4104	7960	6584	4234
	16	22	6073	4962	2419	7790	5886	2676	7324	5777	2919	9490	7356	3844	9235	7163	3974	8725	6577	4156	8470	6584	4260
	18	25	6403	5212	2434	8198	6283	2692	7674	6130	2936	10000	7871	3870	9660	7614	3974	9150	7028	4182	8810	6970	4286
	19	27	6569	5337	2450	8431	6547	2709	7906	6350	2954	10340	8193	3896	10000	7935	4000	9490	7349	4182	9150	7292	4286
	22	30	7119	5296	2450	9188	6503	2709	8605	6306	2954	11275	8129	3922	10935	7871	4026	10000	7478	4286	9405	7549	4442
	24	32	7505	5296	2466	9712	6503	2725	9071	6306	2971	11955	8129	3922	11530	7871	4052	10340	7607	4364	9575	7742	4546
2.5+2.5+2.5+ 2.5+4.2	12	18	6073	4753	2403	6975	5886	2659	6567	5733	2884	8470	7356	3792	8215	7099	3896	7790	6577	4078	7535	6520	4182
	14	20	6073	4753	2403	7382	5886	2659	6975	5777	2901	8980	7356	3818	8725	7163	3922	8215	6577	4104	7960	6584	4234
	16	22	6073	4962	2419	7790	5886	2676	7324	5777	2919	9490	7356	3844	9235	7163	3974	8725	6577	4156	8470	6584	4260
	18	25	6403	5212	2434	8198	6283	2692	7674	6130	2936	10000	7871	3870	9660	7614	3974	9150	7028	4182	8810	6970	4286
	19	27	6569	5337	2450	8431	6547	2709	7906	6350	2954	10340	8193	3896	10000	7935	4000	9490	7349	4182	9150	7292	4286
	22	30	7119	5296	2450	9188	6503	2709	8605	6306	2954	11275	8129	3922	10935	7871	4026	10000	7478	4286	9405	7549	4442
	24	32	7505	5296	2466	9712	6503	2725	9071	6306	2971	11955	8129	3922	11530	7871	4052	10340	7607	4364	9575	7742	4546
2.5+2.5+2.5+ 2.5+5.0	12	18	6073	4753	2403	6975	5886	2659	6567	5733	2884	8470	7356	3792	8215	7099	3896	7790	6577	4078	7535	6520	4182
	14	20	6073	4753	2403	7382	5886	2659	6975	5777	2901	8980	7356	3818	8725	7163	3922	8215	6577	4104	7960	6584	4234
	16	22	6073	4962	2419	7790	5886	2676	7324	5777	2919	9490	7356	3844	9235	7163	3974	8725	6577	4156	8470	6584	4260
	18	25	6403	5212	2434	8198	6283	2692	7674	6130	2936	10000	7871	3870	9660	7614	3974	9150	7028	4182	8810	6970	4286
	19	27	6569	5337	2450	8431	6547	2709	7906	6350	2954	10340	8193	3896	10000	7935	4000	9490	7349	4182	9150	7292	4286
	22	30	7119	5296	2450	9188	6503	2709	8605	6306	2954	11275	8129	3922	10935	7871	4026	10000	7478	4286	9405	7549	4442
	24	32	7505	5296	2466	9712	6503	2725	9071	6306	2971	11955	8129	3922	11530	7871	4052	10340	7607	4364	9575	7742	4546
2.5+2.5+2.5+ 2.5+6.0	12	18	6073	4753	2403	6975	5886	2659	6567	5733	2884	8470	7356	3792	8215	7099	3896	7790	6577	4078	7535	6520	4182
	14	20	6073	4753	2403	7382	5886	2659	6975	5777	2901	8980	7356	3818	8725	7163	3922	8215	6577	4104	7960	6584	4234
	16	22	6073	4962	2419	7790	5886	2676	7324	5777	2919	9490	7356	3844	9235	7163	3974	8725	6577	4156	8470	6584	4260
	18	25	6403	5212	2434	8198	6283	2692	7674	6130	2936	10000	7871	3870	9660	7614	3974	9150	7028	4182	8810	6970	4286
	19	27	6569	5337	2450	8431	6547	2709	7906	6350	2954	10340	8193	3896	10000	7935	4000	9490	7349	4182	9150	7292	4286
	22	30	7119	5296	2450	9188	6503	2709	8605	6306	2954	11275	8129	3922	10935	7871	4026	10000	7478	4286	9405	7549	4442
	24	32	7505	5296	2466	9712	6503	2725	9071	6306	2971	11955	8129	3922	11530	7871	4052	10340	7607	4364	9575	7742	4546
2.5+2.5+2.5+ 3.5+3.5	12	18	6073	4753	2403	6975	5886	2659	6567	5733	2884	8470	7356	3792	8215	7099	3896	7790	6577	4078	7535	6520	4182
	14	20	6073	4753	2403	7382	5886	2659	6975	5777	2901	8980	7356	3818	8725	7163	3922	8215	6577	4104	7960	6584	4234
	16	22	6073	4962	2419	7790	5886	2676	7324	5777	2919	9490	7356	3844	9235	7163	3974	8725	6577	4156	8470	6584	4260
	18	25	6403	5212	2434	8198	6283	2692	7674	6130	2936	10000	7871	3870	9660	7614	3974	9150	7028	4182	8810	6970	4286
	19	27	6569	5337	2450	8431	6547	2709	7906	6350	2954	10340	8193	3896	10000	7935	4000	9490	7349	4182	9150	7292	4286
	22	30	7119	5296	2450	9188	6503	2709	8605	6306	2954	11275	8129	3922	10935	7871	4026	10000	7478	4286	9405	7549	4442
	24	32	7505	5296	2466	9712	6503	2725	9071	6306	2971	11955	8129	3922	11530	7871	4052	10340	7607	4364	9575	7742	4546
2.5+2.5+2.5+ 3.5+4.2	12	18	6073	4753	2403	6975	5886	2659	6567	5733	2884	8470	7356	3792	8215	7099	3896	7790	6577	4078	7535	6520	4182
	14	20	6073	4753	2403	7382	5886	2659	6975	5777	2901	8980	7356	3818	8725	7163	3922	8215	6577	4104	7960	6584	4234
	16	22	6073	4962	2419	7790	5886	2676	7324	5777	2919	9490	7356	3844	9235	7163	3974	8725	6577	4156	8470	6584	4260
	18	25	6403	5212	2434	8198	6283	2692	7674	6130	2936	10000	7871	3870	9660	7614	3974	9150	7028	4182	8810	6970	4286
	19	27	6569	5337	2450	8431	6547	2709	7906	6350	2954	10340	8193	3896	10000	7935	4000	9490	7349	4182	9150	7292	4286
	22	30	7119	5296	2450	9188	6503	2709	8605	6306	2954	11275	8129	3922	10935	7871	4026	10000	7478	4286	9405	7549	4442
	24	32	7505	5296	2466	9712	6503	2725	9071	6306	2971	11955	8129	3922	11530	7871	4052	10340	7607	4364	9575	7742	4546
2.5+2.5+3.5+ 3.5+3.5	12	18	6073	4753	2403	6975	5886	2659	6567	5733	2884	8470	7356	3792	8215	7099	3896	7790	6577	4078	7535	6520	4182
	14	20	6073	4753	2403	7382	5886	2659	6975	5777	2901	8980	7356	3818	8725	7163	3922	8215	6577	4104	7960	6584	4234
	16	22	6073	4962	2419	7790	5886	2676	7324	5777	2919	9490	7356	3844	9235	7163	3974	8725	6577	4156	8470	6584	4260
	18	25	6403	5212	2434	8198	6283	2692	7674	6130	2936	10000	7871	3870	9660	7614	3974	9150	7028	4182	8810	6970	4286
	19	27	6569	5337	2450	8431	6547	2709	7906	6350	2954	10340	8193	3896	10000	7935	4000	9490	7349	4182	9150	7292	4286
	22	30	7119	5296	2450	9188	6503	2709	8605	6306	2954	11275	8129	3922	10935	7871	4026	10000	7478	4286	9405	7549	4442
	24	32	7505	5296	2466	9712	6503	2725	9071	6306	2971	11955	8129	3922	11530	7871	4052	10340	7607	4364	9575	7742	4546
2.5+2.5+3.5+ 3.5+4.2	12	18	6073	4753	2403	6975	5886	2659	6567	5733	2884	8470	7356	3792	8215	7099	3896	7790	6577	4078	7535	6520	4182
	14	20	6073	4753	2403	7382	5886	2659	6975	5777	2901	8980	7356	3818	8725	7163	3922	8215	6577	4104	7960	6584	4234
	16	22	6073	4962	2419	7790	5886	2676	7324	5777	2919	9490	7356	3844	9235	7163	3974	8725	6577	4156	8470	6584	4260
	18	25	6403	5212	2434	8198	6283	2692	7674	6130	2936	10000	7871	3870	9660	7614	3974	9150	7028	4182	8810	6970	4286
	19	27	6569	5337	2450	8431	6547	2709	7906	6350	2954	10340	8193	3896	10000	7935	4000	9490	7349	4182	9150	7292	4286
	22	30	7119	5296	2450	9188	6503	2709	8605	6306	2954	11275	8129	3922	10935	7871	4026	10000	7478	4286	9405	7549	4442
	24	32	7505	5296	2466	9712	6503	2725	9071	6306	2971	11955	8129	3922	11530	7871	4052	10340	7607	4364	9575	7742	4546

HEATING [50Hz, 230V]

	INDOOR	OUTDOOR TEMPERATURE (°CDB)																							
	EDB	-15			-10			-7			-5			0			7			10			15		
	°C	TC	SHC	PI	TC	SHC	PI	TC	SHC	PI	TC	SHC	PI	TC	SHC	PI	TC	SHC	PI	TC	SHC	PI	TC	SHC	PI
RAM-110NP5E	16	5460	0	2820	8070	0	3170	9330	0	3249	9733	0	3202	10916	0	3241	12121	0	2969	13133	0	3030	15003	0	3146
	18	5405	0	2845	8015	0	3194	9262	0	3290	9656	0	3254	10817	0	3298	12066	0	3084	13089	0	3133	14948	0	3261
	20	5350	0	2870	7960	0	3219	9200	0	3322	9590	0	3291	10740	0	3337	12000	0	3158	12825	0	3244	14860	0	3379
	22	5295	0	2894	7905	0	3243	9112	0	3364	9480	0	3345	10641	0	3394	11934	0	3256	12957	0	3338	14794	0	3490
	24	5240	0	2919	7850	0	3268	9050	0	3405	9414	0	3397	10564	0	3450	11868	0	3355	12891	0	3438	14596	0	3603
1.5	16	720	0	459	1140	0	471	1300	0	491	1406	0	505	1712	0	565	2022	0	572	2206	0	588	2546	0	617
	18	710	0	465	1130	0	477	1287	0	502	1392	0	518	1694	0	579	2012	0	601	2198	0	614	2536	0	646
	20	700	0	471	1120	0	484	1276	0	510	1380	0	527	1680	0	589	2000	0	620	2150	0	642	2520	0	676
	22	690	0	477	1110	0	490	1260	0	520	1360	0	541	1662	0	603	1988	0	645	2174	0	665	2508	0	704
	24	680	0	484	1100	0	496	1249	0	531	1348	0	554	1648	0	618	1976	0	670	2162	0	691	2472	0	732
1.8	16	900	0	577	1425	0	593	1625	0	618	1758	0	635	2140	0	711	2528	0	720	2758	0	739	3183	0	776
	18	888	0	585	1413	0	601	1609	0	631	1740	0	651	2118	0	729	2515	0	757	2748	0	772	3170	0	813
	20	875	0	593	1400	0	608	1595	0	641	1725	0	663	2100	0	741	2500	0	780	2688	0	807	3150	0	850
	22	863	0	601	1388	0	616	1575	0	655	1700	0	680	2078	0	759	2485	0	811	2718	0	837	3135	0	885
	24	850	0	608	1375	0	624	1561	0	668	1685	0	697	2060	0	777	2470	0	842	2703	0	869	3090	0	921
2.5	16	1224	0	844	1938	0	866	2209	0	903	2390	0	928	2910	0	1039	3437	0	1052	3750	0	1081	4328	0	1134
	18	1207	0	855	1921	0	878	2188	0	922	2366	0	952	2880	0	1065	3420	0	1106	3737	0	1129	4311	0	1188
	20	1190	0	866	1904	0	889	2169	0	937	2346	0	969	2856	0	1083	3400	0	1140	3655	0	1180	4284	0	1243
	22	1173	0	878	1887	0	901	2142	0	957	2312	0	994	2825	0	1109	3380	0	1186	3696	0	1223	4264	0	1294
	24	1156	0	889	1870	0	912	2123	0	976	2292	0	1018	2802	0	1135	3359	0	1231	3675	0	1270	4202	0	1346
3.5	16	1548	0	1051	2451	0	1079	2794	0	1125	3023	0	1156	3681	0	1294	4347	0	1311	4743	0	1346	5474	0	1413
	18	1527	0	1065	2430	0	1093	2767	0	1149	2993	0	1186	3642	0	1326	4326	0	1377	4726	0	1406	5452	0	1480
	20	1505	0	1079	2408	0	1108	2743	0	1167	2967	0	1207	3612	0	1349	4300	0	1420	4623	0	1470	5418	0	1548
	22	1484	0	1093	2387	0	1122	2709	0	1192	2924	0	1238	3573	0	1382	4274	0	1477	4674	0	1524	5392	0	1612
	24	1462	0	1108	2365	0	1136	2685	0	1215	2898	0	1268	3543	0	1414	4248	0	1534	4648	0	1582	5315	0	1677
4.2	16	1548	0	1051	2451	0	1079	2794	0	1125	3023	0	1156	3681	0	1294	4347	0	1311	4743	0	1346	5474	0	1413
	18	1527	0	1065	2430	0	1093	2767	0	1149	2993	0	1186	3642	0	1326	4326	0	1377	4726	0	1406	5452	0	1480
	20	1505	0	1079	2408	0	1108	2743	0	1167	2967	0	1207	3612	0	1349	4300	0	1420	4623	0	1470	5418	0	1548
	22	1484	0	1093	2387	0	1122	2709	0	1192	2924	0	1238	3573	0	1382	4274	0	1477	4674	0	1524	5392	0	1612
	24	1462	0	1108	2365	0	1136	2685	0	1215	2898	0	1268	3543	0	1414	4248	0	1534	4648	0	1582	5315	0	1677
5.0	16	2340	0	1702	3705	0	1748	4224	0	1823	4570	0	1872	5564	0	2095	6572	0	2123	7170	0	2180	8275	0	2289
	18	2308	0	1725	3673	0	1771	4183	0	1861	4524	0	1921	5506	0	2148	6539	0	2231	7144	0	2277	8242	0	2397
	20	2275	0	1748	3640	0	1794	4147	0	1891	4485	0	1955	5460	0	2185	6500	0	2300	6988	0	2381	8190	0	2507
	22	2243	0	1771	3608	0	1817	4095	0	1930	4420	0	2006	5402	0	2238	6461	0	2392	7066	0	2468	8151	0	2611
	24	2210	0	1794	3575	0	1840	4059	0	1968	4381	0	2054	5356	0	2291	6422	0	2484	7027	0	2562	8034	0	2716
6.0	16	2840	0	1702	4205	0	1748	5024	0	1823	5370	0	1872	6564	0	2095	7572	0	2123	8170	0	2180	9275	0	2289
	18	2808	0	1725	4173	0	1771	4983	0	1861	5324	0	1921	6506	0	2148	7539	0	2231	8144	0	2277	9242	0	2397
	20	2775	0	1748	4140	0	1794	4947	0	1891	5285	0	1955	6460	0	2185	7500	0	2300	7988	0	2381	9190	0	2507
	22	2743	0	1771	4108	0	1817	4895	0	1930	5220	0	2006	6402	0	2238	7461	0	2392	8066	0	2468	9151	0	2611
	24	2710	0	1794	4075	0	1840	4859	0	1968	5181	0	2054	6356	0	2291	7422	0	2484	8027	0	2562	9034	0	2716

EWB : Evaporator Wet Bulb temperature (°C)

EDB : Evaporator Dry Bulb temperature (°C)

(°CDB) : Outdoor Unit Inlet Air Dry Temperature (°C)

TC : Total Capacity (W)

SHC : Sensible Heating Capacity (W)

PI : Power Input (W)

	INDOOR	OUTDOOR TEMPERATURE (°CDB)																							
	EDB	-15			-10			-7			-5			0			7			10			15		
	°C	TC	SHC	PI	TC	SHC	PI	TC	SHC	PI	TC	SHC	PI	TC	SHC	PI	TC	SHC	PI	TC	SHC	PI	TC	SHC	PI
1.5+1.5	16	1440	0	703	2280	0	722	2599	0	753	2812	0	773	3424	0	865	4044	0	877	4412	0	901	5092	0	945
	18	1420	0	713	2260	0	732	2574	0	769	2784	0	793	3388	0	887	4024	0	922	4396	0	941	5072	0	990
	20	1400	0	722	2240	0	741	2552	0	781	2760	0	808	3360	0	903	4000	0	950	4300	0	983	5040	0	1036
	22	1380	0	732	2220	0	751	2520	0	797	2720	0	828	3324	0	924	3976	0	988	4348	0	1019	5016	0	1078
	24	1360	0	741	2200	0	760	2498	0	813	2696	0	848	3296	0	946	3952	0	1026	4324	0	1058	4944	0	1122
1.5+1.8	16	1620	0	873	2565	0	897	2924	0	935	3164	0	961	3852	0	1075	4550	0	1089	4964	0	1119	5729	0	1174
	18	1598	0	885	2543	0	909	2896	0	955	3132	0	985	3812	0	1102	4527	0	1145	4946	0	1168	5706	0	1230
	20	1575	0	897	2520	0	920	2871	0	970	3105	0	1003	3780	0	1121	4500	0	1180	4838	0	1221	5670	0	1286
	22	1553	0	909	2498	0	932	2835	0	990	3060	0	1029	3740	0	1148	4473	0	1227	4892	0	1266	5643	0	1339
	24	1530	0	920	2475	0	944	2810	0	1010	3033	0	1054	3708	0	1175	4446	0	1274	4865	0	1315	5562	0	1394
1.5+2.5	16	1944	0	977	3078	0	1003	3509	0	1046	3796	0	1074	4622	0	1203	5459	0	1218	5956	0	1251	6874	0	1313
	18	1917	0	990	3051	0	1016	3475	0	1068	3758	0	1102	4574	0	1233	5432	0	1280	5935	0	1307	6847	0	1375
	20	1890	0	1003	3024	0	1030	3445	0	1085	3726	0	1122	4536	0	1254	5400	0	1320	5805	0	1366	6804	0	1439
	22	1863	0	1016	2997	0	1043	3402	0	1108	3672	0	1151	4487	0	1284	5368	0	1373	5870	0	1416	6772	0	1498
	24	1836	0	1030	2970	0	1056	3372	0	1130	3640	0	1179	4450	0	1315	5335	0	1426	5837	0	1470	6674	0	1559
1.5+3.5	16	2268	0	1147	3591	0	1178	4094	0	1228	4429	0	1262	5393	0	1412	6369	0	1431	6949	0	1469	8020	0	1542
	18	2237	0	1163	3560	0	1194	4055	0	1254	4385	0	1294	5336	0	1448	6338	0	1504	6924	0	1535	7988	0	1615
	20	2205	0	1178	3528	0	1209	4019	0	1274	4347	0	1318	5292	0	1473	6300	0	1550	6773	0	1604	7938	0	1690
	22	2174	0	1194	3497	0	1225	3969	0	1301	4284	0	1352	5235	0	1508	6262	0	1612	6848	0	1663	7900	0	1759
	24	2142	0	1209	3465	0	1240	3934	0	1326	4246	0	1384	5191	0	1544	6224	0	1674	6810	0	1727	7787	0	1831
1.5+4.2	16	2592	0	1369	4104	0	1406	4679	0	1466	5062	0	1506	6163	0	1685	7279	0	1708	7942	0	1754	9166	0	1841
	18	2556	0	1388	4068	0	1425	4634	0	1497	5011	0	1545	6098	0	1728	7243	0	1795	7913	0	1832	9130	0	1928
	20	2520	0	1406	4032	0	1443	4594	0	1521	4968	0	1573	6048	0	1758	7200	0	1850	7740	0	1915	9072	0	2017
	22	2484	0	1425	3996	0	1462	4536	0	1553	4896	0	1613	5983	0	1800	7157	0	1924	7826	0	1985	9029	0	2100
	24	2448	0	1443	3960	0	1480	4496	0	1583	4853	0	1652	5933	0	1843	7114	0	1998	7783	0	2061	8899	0	2185
1.5+5.0	16	3060	0	1802	4845	0	1848	5523	0	2123	5976	0	2172	7276	0	2595	8594	0	2623	9376	0	2680	10821	0	2789
	18	3018	0	1825	4803	0	1871	5471	0	2161	5916	0	2221	7200	0	2648	8551	0	2731	9342	0	2777	10778	0	2897
	20	2975	0	1848	4760	0	1894	5423	0	2191	5865	0	2255	7140	0	2685	8500	0	2800	9138	0	2881	10710	0	3007
	22	2933	0	1871	4718	0	1917	5355	0	2230	5780	0	2306	7064	0	2738	8449	0	2892	9240	0	2968	10659	0	3111
	24	2890	0	1894	4675	0	1940	5307	0	2268	5729	0	2354	7004	0	2791	8398	0	2984	9189	0	3062	10506	0	3216
1.5+6.0	16	3420	0	1802	5415	0	1848	6173	0	2123	6679	0	2172	8132	0	2595	9605	0	2623	10479	0	2680	12094	0	2789
	18	3373	0	1825	5368	0	1871	6114	0	2161	6612	0	2221	8047	0	2648	9557	0	2731	10441	0	2777	12046	0	2897
	20	3325	0	1848	5320	0	1894	6061	0	2191	6555	0	2255	7980	0	2685	9500	0	2800	10213	0	2881	11970	0	3007
	22	3278	0	1871	5273	0	1917	5985	0	2230	6460	0	2306	7895	0	2738	9443	0	2892	10327	0	2968	11913	0	3111
	24	3230	0	1894	5225	0	1940	5932	0	2268	6403	0	2354	7828	0	2791	9386	0	2984	10270	0	3062	11742	0	3216
1.8+1.8	16	1800	0	918	2850	0	942	3249	0	983	3515	0	1009	4280	0	1130	5055	0	1145	5515	0	1176	6365	0	1234
	18	1775	0	930	2825	0	955	3218	0	1003	3480	0	1035	4235	0	1158	5030	0	1203	5495	0	1228	6340	0	1292
	20	1750	0	942	2800	0	967	3190	0	1019	3450	0	1054	4200	0	1178	5000	0	1240	5375	0	1283	6300	0	1352
	22	1725	0	955	2775	0	980	3150	0	1041	3400	0	1081	4155	0	1207	4970	0	1290	5435	0	1331	6270	0	1407
	24	1700	0	967	2750	0	992	3122	0	1061	3370	0	1107	4120	0	1235	4940	0	1339	5405	0	1381	6180	0	1464

	INDOOR	OUTDOOR TEMPERATURE (°CDB)																							
	EDB	-15			-10			-7			-5			0			7			10			15		
	°C	TC	SHC	PI	TC	SHC	PI	TC	SHC	PI	TC	SHC	PI	TC	SHC	PI	TC	SHC	PI	TC	SHC	PI	TC	SHC	PI
1.8+2.5	16	2124	0	1132	3363	0	1163	3834	0	1212	4148	0	1245	5050	0	1394	5965	0	1412	6508	0	1450	7511	0	1522
	18	2095	0	1148	3334	0	1178	3797	0	1238	4106	0	1278	4997	0	1429	5935	0	1484	6484	0	1515	7481	0	1594
	20	2065	0	1163	3304	0	1193	3764	0	1258	4071	0	1301	4956	0	1454	5900	0	1530	6343	0	1584	7434	0	1668
	22	2036	0	1178	3275	0	1209	3717	0	1284	4012	0	1334	4903	0	1489	5865	0	1591	6413	0	1642	7399	0	1737
	24	2006	0	1193	3245	0	1224	3684	0	1309	3977	0	1366	4862	0	1524	5829	0	1652	6378	0	1704	7292	0	1807
1.8+3.5	16	2448	0	1384	3876	0	1421	4419	0	1482	4780	0	1522	5821	0	1704	6875	0	1726	7500	0	1773	8656	0	1861
	18	2414	0	1403	3842	0	1440	4376	0	1513	4733	0	1561	5760	0	1747	6841	0	1814	7473	0	1851	8622	0	1949
	20	2380	0	1421	3808	0	1459	4338	0	1537	4692	0	1590	5712	0	1777	6800	0	1870	7310	0	1935	8568	0	2038
	22	2346	0	1440	3774	0	1477	4284	0	1569	4624	0	1631	5651	0	1820	6759	0	1945	7392	0	2007	8527	0	2122
	24	2312	0	1459	3740	0	1496	4246	0	1600	4583	0	1670	5603	0	1863	6718	0	2020	7351	0	2083	8405	0	2208
1.8+4.2	16	2772	0	1628	4389	0	1672	5003	0	1743	5413	0	1791	6591	0	2004	7785	0	2031	8493	0	2086	9802	0	2189
	18	2734	0	1650	4351	0	1694	4956	0	1780	5359	0	1837	6522	0	2055	7746	0	2134	8462	0	2178	9764	0	2292
	20	2695	0	1672	4312	0	1716	4913	0	1808	5313	0	1870	6468	0	2090	7700	0	2200	8278	0	2277	9702	0	2398
	22	2657	0	1694	4274	0	1738	4851	0	1846	5236	0	1918	6399	0	2141	7654	0	2288	8370	0	2361	9656	0	2497
	24	2618	0	1716	4235	0	1760	4808	0	1883	5190	0	1965	6345	0	2191	7608	0	2376	8324	0	2451	9517	0	2598
1.8+5.0	16	3240	0	1928	5130	0	1977	5848	0	2257	6327	0	2311	7704	0	2750	9099	0	2780	9927	0	2842	11457	0	2958
	18	3195	0	1953	5085	0	2002	5792	0	2298	6264	0	2362	7623	0	2807	9054	0	2896	9891	0	2945	11412	0	3074
	20	3150	0	1977	5040	0	2027	5742	0	2330	6210	0	2400	7560	0	2847	9000	0	2970	9675	0	3056	11340	0	3192
	22	3105	0	2002	4995	0	2051	5670	0	2373	6120	0	2454	7479	0	2903	8946	0	3069	9783	0	3150	11286	0	3303
	24	3060	0	2027	4950	0	2076	5620	0	2414	6066	0	2506	7416	0	2960	8892	0	3168	9729	0	3252	11124	0	3417
1.8+6.0	16	3600	0	1928	5700	0	1977	6498	0	2257	7030	0	2311	8560	0	2750	10110	0	2780	11030	0	2842	12730	0	2958
	18	3550	0	1953	5650	0	2002	6436	0	2298	6960	0	2362	8470	0	2807	10060	0	2896	10990	0	2945	12680	0	3074
	20	3500	0	1977	5600	0	2027	6380	0	2330	6900	0	2400	8400	0	2847	10000	0	2970	10750	0	3056	12600	0	3192
	22	3450	0	2002	5550	0	2051	6300	0	2373	6800	0	2454	8310	0	2903	9940	0	3069	10870	0	3150	12540	0	3303
	24	3400	0	2027	5500	0	2076	6244	0	2414	6740	0	2506	8240	0	2960	9880	0	3168	10810	0	3252	12360	0	3417
2.5+2.5	16	2448	0	1421	3876	0	1459	4419	0	1521	4780	0	1563	5821	0	1749	6875	0	1772	7500	0	1820	8656	0	1910
	18	2414	0	1440	3842	0	1478	4376	0	1553	4733	0	1603	5760	0	1793	6841	0	1862	7473	0	1901	8622	0	2001
	20	2380	0	1459	3808	0	1498	4338	0	1578	4692	0	1632	5712	0	1824	6800	0	1920	7310	0	1987	8568	0	2093
	22	2346	0	1478	3774	0	1517	4284	0	1611	4624	0	1674	5651	0	1868	6759	0	1997	7392	0	2060	8527	0	2179
	24	2312	0	1498	3740	0	1536	4246	0	1643	4583	0	1715	5603	0	1912	6718	0	2074	7351	0	2139	8405	0	2268
2.5+3.5	16	2772	0	1687	4389	0	1733	5003	0	1807	5413	0	1856	6591	0	2077	7785	0	2104	8493	0	2161	9802	0	2269
	18	2734	0	1710	4351	0	1756	4956	0	1845	5359	0	1904	6522	0	2130	7746	0	2212	8462	0	2257	9764	0	2376
	20	2695	0	1733	4312	0	1778	4913	0	1874	5313	0	1938	6468	0	2166	7700	0	2280	8278	0	2360	9702	0	2485
	22	2657	0	1756	4274	0	1801	4851	0	1913	5236	0	1988	6399	0	2218	7654	0	2371	8370	0	2446	9656	0	2588
	24	2618	0	1778	4235	0	1824	4808	0	1951	5190	0	2036	6345	0	2271	7608	0	2462	8324	0	2540	9517	0	2693
2.5+4.2	16	3096	0	1776	4902	0	1824	5588	0	1902	6046	0	1954	7362	0	2186	8695	0	2215	9486	0	2275	10948	0	2388
	18	3053	0	1800	4859	0	1848	5535	0	1942	5986	0	2004	7284	0	2242	8652	0	2328	9451	0	2376	10905	0	2501
	20	3010	0	1824	4816	0	1872	5487	0	1973	5934	0	2040	7224	0	2280	8600	0	2400	9245	0	2484	10836	0	2616
	22	2967	0	1848	4773	0	1896	5418	0	2014	5848	0	2093	7147	0	2335	8548	0	2496	9348	0	2575	10784	0	2724
	24	2924	0	1872	4730	0	1920	5370	0	2054	5796	0	2143	7086	0	2390	8497	0	2592	9297	0	2674	10630	0	2834

	INDOOR	OUTDOOR TEMPERATURE (°CDB)																							
	EDB	-15			-10			-7			-5			0			7			10			15		
	°C	TC	SHC	PI	TC	SHC	PI	TC	SHC	PI	TC	SHC	PI	TC	SHC	PI	TC	SHC	PI	TC	SHC	PI	TC	SHC	PI
2.5+5.0	16	3564	0	2113	5643	0	2167	6433	0	2455	6960	0	2514	8474	0	2978	10009	0	3011	10920	0	3079	12603	0	3206
	18	3515	0	2140	5594	0	2194	6372	0	2500	6890	0	2571	8385	0	3040	9959	0	3138	10880	0	3193	12553	0	3334
	20	3465	0	2167	5544	0	2222	6316	0	2536	6831	0	2612	8316	0	3084	9900	0	3220	10643	0	3315	12474	0	3465
	22	3416	0	2194	5495	0	2249	6237	0	2583	6732	0	2672	8227	0	3147	9841	0	3329	10761	0	3419	12415	0	3587
	24	3366	0	2222	5445	0	2276	6182	0	2628	6673	0	2729	8158	0	3209	9781	0	3438	10702	0	3530	12236	0	3712
2.5+6.0	16	3900	0	2113	6000	0	2167	7098	0	2455	7630	0	2514	9460	0	2978	11010	0	3011	11930	0	3079	13630	0	3206
	18	3850	0	2140	5950	0	2194	7036	0	2500	7560	0	2571	9370	0	3040	10960	0	3138	11890	0	3193	13580	0	3334
	20	3800	0	2167	5900	0	2222	6980	0	2536	7500	0	2612	9300	0	3084	10900	0	3220	11650	0	3315	13500	0	3465
	22	3750	0	2194	5850	0	2249	6900	0	2583	7400	0	2672	9210	0	3147	10840	0	3329	11770	0	3419	13440	0	3587
	24	3700	0	2222	5800	0	2276	6844	0	2628	7340	0	2729	9140	0	3209	10780	0	3438	11710	0	3530	13260	0	3712
3.5+3.5	16	3096	0	1820	4902	0	1870	5588	0	1949	6046	0	2002	7362	0	2241	8695	0	2271	9486	0	2332	10948	0	2448
	18	3053	0	1845	4859	0	1894	5535	0	1990	5986	0	2054	7284	0	2298	8652	0	2386	9451	0	2435	10905	0	2563
	20	3010	0	1870	4816	0	1919	5487	0	2022	5934	0	2091	7224	0	2337	8600	0	2460	9245	0	2546	10836	0	2681
	22	2967	0	1894	4773	0	1943	5418	0	2064	5848	0	2145	7147	0	2394	8548	0	2558	9348	0	2640	10784	0	2792
	24	2924	0	1919	4730	0	1968	5370	0	2105	5796	0	2197	7086	0	2450	8497	0	2657	9297	0	2740	10630	0	2905
3.5+4.2	16	3420	0	1983	5415	0	2037	6173	0	2124	6679	0	2182	8132	0	2441	9605	0	2474	10479	0	2541	12094	0	2667
	18	3373	0	2010	5368	0	2064	6114	0	2168	6612	0	2238	8047	0	2503	9557	0	2600	10441	0	2653	12046	0	2793
	20	3325	0	2037	5320	0	2090	6061	0	2203	6555	0	2278	7980	0	2546	9500	0	2680	10213	0	2774	11970	0	2921
	22	3278	0	2064	5273	0	2117	5985	0	2249	6460	0	2337	7895	0	2608	9443	0	2787	10327	0	2876	11913	0	3042
	24	3230	0	2090	5225	0	2144	5932	0	2294	6403	0	2393	7828	0	2669	9386	0	2894	10270	0	2986	11742	0	3165
3.5+5.0	16	3900	0	2276	6000	0	2334	6998	0	2530	7530	0	2593	9360	0	3028	10910	0	3064	11830	0	3137	13530	0	3275
	18	3850	0	2305	5950	0	2364	6936	0	2578	7460	0	2655	9270	0	3096	10860	0	3202	11790	0	3261	13480	0	3413
	20	3800	0	2334	5900	0	2393	6880	0	2617	7400	0	2699	9200	0	3143	10800	0	3290	11550	0	3393	13400	0	3555
	22	3750	0	2364	5850	0	2423	6800	0	2667	7300	0	2764	9110	0	3211	10740	0	3408	11670	0	3505	13340	0	3687
	24	3700	0	2393	5800	0	2452	6744	0	2716	7240	0	2825	9040	0	3278	10680	0	3525	11610	0	3625	13160	0	3822
3.5+6.0	16	3900	0	2276	6000	0	2334	6998	0	2530	7530	0	2593	9360	0	3028	10910	0	3064	11830	0	3137	13530	0	3275
	18	3850	0	2305	5950	0	2364	6936	0	2578	7460	0	2655	9270	0	3096	10860	0	3202	11790	0	3261	13480	0	3413
	20	3800	0	2334	5900	0	2393	6880	0	2617	7400	0	2699	9200	0	3143	10800	0	3290	11550	0	3393	13400	0	3555
	22	3750	0	2364	5850	0	2423	6800	0	2667	7300	0	2764	9110	0	3211	10740	0	3408	11670	0	3505	13340	0	3687
	24	3700	0	2393	5800	0	2452	6744	0	2716	7240	0	2825	9040	0	3278	10680	0	3525	11610	0	3625	13160	0	3822
4.2+4.2	16	3696	0	1820	5502	0	1870	6788	0	1949	7246	0	2002	9162	0	2241	10495	0	2271	11286	0	2332	12748	0	2448
	18	3653	0	1845	5459	0	1894	6735	0	1990	7186	0	2054	9084	0	2298	10452	0	2386	11251	0	2435	12705	0	2563
	20	3610	0	1870	5416	0	1919	6687	0	2022	7134	0	2091	9024	0	2337	10400	0	2460	11045	0	2546	12636	0	2681
	22	3567	0	1894	5373	0	1943	6618	0	2064	7048	0	2145	8947	0	2394	10348	0	2558	11148	0	2640	12584	0	2792
	24	3524	0	1919	5330	0	1968	6570	0	2105	6996	0	2197	8886	0	2450	10297	0	2657	11097	0	2740	12430	0	2905
4.2+5.0	16	4220	0	2276	6215	0	2334	7673	0	2630	8179	0	2693	10332	0	3178	11805	0	3214	12679	0	3287	14294	0	3425
	18	4173	0	2305	6168	0	2364	7614	0	2678	8112	0	2755	10247	0	3246	11757	0	3352	12641	0	3411	14246	0	3563
	20	4125	0	2334	6120	0	2393	7561	0	2717	8055	0	2799	10180	0	3293	11700	0	3440	12413	0	3543	14170	0	3705
	22	4078	0	2364	6073	0	2423	7485	0	2767	7960	0	2864	10095	0	3361	11643	0	3558	12527	0	3655	14113	0	3837
	24	4030	0	2393	6025	0	2452	7432	0	2816	7903	0	2925	10028	0	3428	11586	0	3675	12470	0	3775	13942	0	3972

	INDOOR	OUTDOOR TEMPERATURE (°CDB)																							
	EDB	-15			-10			-7			-5			0			7			10			15		
	°C	TC	SHC	PI	TC	SHC	PI	TC	SHC	PI	TC	SHC	PI	TC	SHC	PI	TC	SHC	PI	TC	SHC	PI	TC	SHC	PI
4.2+6.0	16	4200	0	2276	6300	0	2334	7798	0	2630	8330	0	2693	10560	0	3178	12110	0	3214	13030	0	3287	14730	0	3425
	18	4150	0	2305	6250	0	2364	7736	0	2678	8260	0	2755	10470	0	3246	12060	0	3352	12990	0	3411	14680	0	3563
	20	4100	0	2334	6200	0	2393	7680	0	2717	8200	0	2799	10400	0	3293	12000	0	3440	12750	0	3543	14600	0	3705
	22	4050	0	2364	6150	0	2423	7600	0	2767	8300	0	2864	10310	0	3361	11940	0	3558	12870	0	3655	14540	0	3837
	24	4000	0	2393	6100	0	2452	7544	0	2816	8040	0	2925	10240	0	3428	11880	0	3675	12810	0	3775	14360	0	3972
5.0+5.0	16	4200	0	2276	6300	0	2334	7798	0	2630	8330	0	2693	10560	0	3178	12110	0	3214	13030	0	3287	14730	0	3425
	18	4150	0	2305	6250	0	2364	7736	0	2678	8260	0	2755	10470	0	3246	12060	0	3352	12990	0	3411	14680	0	3563
	20	4100	0	2334	6200	0	2393	7680	0	2717	8200	0	2799	10400	0	3293	12000	0	3440	12750	0	3543	14600	0	3705
	22	4050	0	2364	6150	0	2423	7600	0	2767	8300	0	2864	10310	0	3361	11940	0	3558	12870	0	3655	14540	0	3837
	24	4000	0	2393	6100	0	2452	7544	0	2816	8040	0	2925	10240	0	3428	11880	0	3675	12810	0	3775	14360	0	3972
5.0+6.0	16	4200	0	2276	6300	0	2334	7798	0	2630	8330	0	2693	10560	0	3178	12110	0	3214	13030	0	3287	14730	0	3425
	18	4150	0	2305	6250	0	2364	7736	0	2678	8260	0	2755	10470	0	3246	12060	0	3352	12990	0	3411	14680	0	3563
	20	4100	0	2334	6200	0	2393	7680	0	2717	8200	0	2799	10400	0	3293	12000	0	3440	12750	0	3543	14600	0	3705
	22	4050	0	2364	6150	0	2423	7600	0	2767	8300	0	2864	10310	0	3361	11940	0	3558	12870	0	3655	14540	0	3837
	24	4000	0	2393	6100	0	2452	7544	0	2816	8040	0	2925	10240	0	3428	11880	0	3675	12810	0	3775	14360	0	3972
6.0+6.0	16	4200	0	2276	6300	0	2334	7798	0	2630	8330	0	2693	10560	0	3178	12110	0	3214	13030	0	3287	14730	0	3425
	18	4150	0	2305	6250	0	2364	7736	0	2678	8260	0	2755	10470	0	3246	12060	0	3352	12990	0	3411	14680	0	3563
	20	4100	0	2334	6200	0	2393	7680	0	2717	8200	0	2799	10400	0	3293	12000	0	3440	12750	0	3543	14600	0	3705
	22	4050	0	2364	6150	0	2423	7600	0	2767	8300	0	2864	10310	0	3361	11940	0	3558	12870	0	3655	14540	0	3837
	24	4000	0	2393	6100	0	2452	7544	0	2816	8040	0	2925	10240	0	3428	11880	0	3675	12810	0	3775	14360	0	3972
1.5+1.5+1.5	16	2160	0	1140	3420	0	1170	3899	0	1220	4218	0	1254	5136	0	1403	6066	0	1421	6618	0	1460	7638	0	1532
	18	2130	0	1155	3390	0	1186	3862	0	1246	4176	0	1286	5082	0	1438	6036	0	1494	6594	0	1525	7608	0	1605
	20	2100	0	1170	3360	0	1201	3828	0	1266	4140	0	1309	5040	0	1463	6000	0	1540	6450	0	1594	7560	0	1679
	22	2070	0	1186	3330	0	1217	3780	0	1292	4080	0	1343	4986	0	1498	5964	0	1602	6522	0	1652	7524	0	1748
	24	2040	0	1201	3300	0	1232	3746	0	1318	4044	0	1375	4944	0	1534	5928	0	1663	6486	0	1716	7416	0	1819
1.5+1.5+1.8	16	2340	0	1332	3705	0	1368	4224	0	1426	4570	0	1465	5564	0	1640	6572	0	1661	7170	0	1706	8275	0	1791
	18	2308	0	1350	3673	0	1386	4183	0	1456	4524	0	1503	5506	0	1681	6539	0	1746	7144	0	1782	8242	0	1876
	20	2275	0	1368	3640	0	1404	4147	0	1480	4485	0	1530	5460	0	1710	6500	0	1800	6988	0	1863	8190	0	1962
	22	2243	0	1386	3608	0	1422	4095	0	1511	4420	0	1570	5402	0	1751	6461	0	1872	7066	0	1931	8151	0	2043
	24	2210	0	1404	3575	0	1440	4059	0	1540	4381	0	1607	5356	0	1793	6422	0	1944	7027	0	2005	8034	0	2126
1.5+1.5+2.5	16	2664	0	1487	4218	0	1528	4809	0	1593	5202	0	1636	6334	0	1831	7481	0	1855	8162	0	1905	9420	0	2000
	18	2627	0	1508	4181	0	1548	4763	0	1626	5150	0	1678	6268	0	1877	7444	0	1950	8133	0	1990	9383	0	2094
	20	2590	0	1528	4144	0	1568	4721	0	1652	5106	0	1709	6216	0	1910	7400	0	2010	7955	0	2080	9324	0	2191
	22	2553	0	1548	4107	0	1588	4662	0	1687	5032	0	1753	6149	0	1956	7356	0	2090	8044	0	2157	9280	0	2281
	24	2516	0	1568	4070	0	1608	4621	0	1720	4988	0	1795	6098	0	2002	7311	0	2171	7999	0	2239	9146	0	2374
1.5+1.5+3.5	16	2988	0	1791	4731	0	1839	5393	0	1918	5835	0	1970	7105	0	2205	8391	0	2234	9155	0	2294	10566	0	2408
	18	2947	0	1815	4690	0	1863	5342	0	1958	5777	0	2021	7030	0	2260	8350	0	2347	9122	0	2396	10524	0	2522
	20	2905	0	1839	4648	0	1888	5295	0	1989	5727	0	2057	6972	0	2299	8300	0	2420	8923	0	2505	10458	0	2638
	22	2864	0	1863	4607	0	1912	5229	0	2031	5644	0	2110	6897	0	2355	8250	0	2517	9022	0	2597	10408	0	2747
	24	2822	0	1888	4565	0	1936	5183	0	2071	5594	0	2161	6839	0	2410	8200	0	2614	8972	0	2696	10259	0	2858

	INDOOR	OUTDOOR TEMPERATURE (°CDB)																							
	EDB	-15			-10			-7			-5			0			7			10			15		
	°C	TC	SHC	PI	TC	SHC	PI	TC	SHC	PI	TC	SHC	PI	TC	SHC	PI	TC	SHC	PI	TC	SHC	PI	TC	SHC	PI
1.5+1.5+4.2	16	3312	0	1713	5244	0	1757	5978	0	1927	6468	0	1975	7875	0	2386	9301	0	2412	10148	0	2467	11712	0	2569
	18	3266	0	1735	5198	0	1779	5921	0	1964	6403	0	2020	7792	0	2436	9255	0	2515	10111	0	2558	11666	0	2672
	20	3220	0	1757	5152	0	1800	5870	0	1992	6348	0	2053	7728	0	2471	9200	0	2580	9890	0	2656	11592	0	2776
	22	3174	0	1779	5106	0	1822	5796	0	2029	6256	0	2101	7645	0	2521	9145	0	2667	10000	0	2739	11537	0	2874
	24	3128	0	1800	5060	0	1844	5744	0	2066	6201	0	2147	7581	0	2571	9090	0	2754	9945	0	2829	11371	0	2975
1.5+1.5+5.0	16	3700	0	2120	5800	0	2175	6798	0	2363	7330	0	2422	9060	0	2787	10610	0	2820	11530	0	2888	13230	0	3016
	18	3650	0	2148	5750	0	2205	6736	0	2409	7260	0	2480	8970	0	2850	10560	0	2948	11490	0	3003	13180	0	3145
	20	3600	0	2175	5700	0	2229	6680	0	2644	7200	0	2521	8900	0	2894	10500	0	3030	11250	0	3126	13100	0	3276
	22	3550	0	2202	5650	0	2257	6600	0	2491	7100	0	2581	8810	0	2956	10440	0	3139	11370	0	3229	13140	0	3399
	24	3500	0	2229	5600	0	2284	6544	0	2536	7040	0	2638	8740	0	3019	10380	0	3248	11310	0	3341	12860	0	3524
1.5+1.5+6.0	16	4100	0	2120	6200	0	2175	7498	0	2363	8030	0	2422	10060	0	2787	11610	0	2820	12530	0	2888	14230	0	3016
	18	4050	0	2148	6150	0	2202	7436	0	2409	7960	0	2480	9970	0	2850	11560	0	2948	12490	0	3003	14180	0	3145
	20	4000	0	2175	6100	0	2229	7380	0	2444	7900	0	2521	9900	0	2894	11500	0	3030	12250	0	3126	14100	0	3276
	22	3950	0	2202	6050	0	2257	7300	0	2491	7800	0	2581	9810	0	2956	11440	0	3139	12370	0	3229	14040	0	3399
	24	3900	0	2229	6000	0	2284	7244	0	2536	7740	0	2638	9740	0	3019	11380	0	3248	12310	0	3341	13860	0	3524
1.5+1.8+1.8	16	2520	0	1391	3990	0	1429	4549	0	1490	4921	0	1530	5992	0	1713	7077	0	1735	7721	0	1782	8911	0	1871
	18	2485	0	1410	3955	0	1448	4505	0	1521	4872	0	1570	5929	0	1756	7042	0	1824	7693	0	1861	8876	0	1959
	20	2450	0	1429	3920	0	1466	4466	0	1545	4830	0	1598	5880	0	1786	7000	0	1880	7525	0	1946	8820	0	2049
	22	2415	0	1448	3885	0	1485	4410	0	1578	4760	0	1639	5817	0	1829	6958	0	1955	7609	0	2017	8778	0	2134
	24	2380	0	1466	3850	0	1504	4371	0	1609	4718	0	1679	5768	0	1872	6916	0	2030	7567	0	2094	8652	0	2220
1.5+1.8+2.5	16	2844	0	1576	4503	0	1619	5133	0	1688	5554	0	1734	6762	0	1940	7987	0	1966	8714	0	2019	10057	0	2119
	18	2805	0	1598	4464	0	1640	5084	0	1723	5498	0	1779	6691	0	1989	7947	0	2066	8682	0	2109	10017	0	2219
	20	2765	0	1619	4424	0	1661	5040	0	1751	5451	0	1811	6636	0	2024	7900	0	2130	8493	0	2205	9954	0	2322
	22	2726	0	1640	4385	0	1683	4977	0	1787	5372	0	1857	6565	0	2072	7853	0	2215	8587	0	2285	9907	0	2418
	24	2686	0	1661	4345	0	1704	4933	0	1823	5325	0	1902	6510	0	2121	7805	0	2300	8540	0	2373	9764	0	2516
1.5+1.8+3.5	16	3168	0	1819	5016	0	1866	5718	0	2022	6186	0	2073	7533	0	2371	8897	0	2399	9706	0	2458	11202	0	2568
	18	3124	0	1843	4972	0	1890	5664	0	2061	6125	0	2122	7454	0	2425	8853	0	2510	9671	0	2557	11158	0	2679
	20	3080	0	1866	4928	0	1913	5614	0	2092	6072	0	2158	7392	0	2463	8800	0	2580	9460	0	2662	11088	0	2792
	22	3036	0	1890	4884	0	1937	5544	0	2132	5984	0	2209	7313	0	2517	8747	0	2674	9566	0	2752	11035	0	2897
	24	2992	0	1913	4840	0	1960	5495	0	2171	5931	0	2259	7251	0	2571	8694	0	2768	9513	0	2848	10877	0	3005
1.5+1.8+4.2	16	3492	0	1839	5529	0	1886	6303	0	2052	6819	0	2103	8303	0	2421	9807	0	2449	10699	0	2508	12348	0	2618
	18	3444	0	1863	5481	0	1910	6243	0	2091	6751	0	2152	8216	0	2475	9758	0	2560	10660	0	2607	12300	0	2729
	20	3395	0	1886	5432	0	1933	6189	0	2122	6693	0	2188	8148	0	2513	9700	0	2630	10428	0	2712	12222	0	2842
	22	3347	0	1910	5384	0	1957	6111	0	2162	6596	0	2239	8061	0	2567	9642	0	2724	10544	0	2802	12164	0	2947
	24	3298	0	1933	5335	0	1980	6057	0	2201	6538	0	2289	7993	0	2621	9584	0	2818	10486	0	2898	11989	0	3055
1.5+1.8+5.0	16	3900	0	2209	6000	0	2266	7098	0	2458	7630	0	2520	9560	0	2896	11110	0	2931	12030	0	3002	13730	0	3136
	18	3850	0	2238	5950	0	2295	7036	0	2506	7560	0	2580	9470	0	2962	11060	0	3065	11990	0	3122	13680	0	3270
	20	3800	0	2266	5900	0	2323	6980	0	2543	7500	0	2623	9400	0	3008	11000	0	3150	11750	0	3250	13600	0	3407
	22	3750	0	2295	5850	0	2352	6900	0	2592	7400	0	2685	9310	0	3073	10940	0	3264	11870	0	3358	13540	0	3535
	24	3700	0	2323	5800	0	2380	6844	0	2639	7340	0	2745	9240	0	3139	10880	0	3378	11810	0	3475	13360	0	3666

	INDOOR	OUTDOOR TEMPERATURE (°CDB)																							
	EDB	-15			-10			-7			-5			0			7			10			15		
	°C	TC	SHC	PI	TC	SHC	PI	TC	SHC	PI	TC	SHC	PI	TC	SHC	PI	TC	SHC	PI	TC	SHC	PI	TC	SHC	PI
1.5+1.8+6.0	16	4200	0	2209	6300	0	2266	7798	0	2458	8330	0	2520	10560	0	2896	12110	0	2931	13030	0	3002	14730	0	3136
	18	4150	0	2238	6250	0	2295	7736	0	2506	8260	0	2580	10470	0	2962	12060	0	3065	12990	0	3122	14680	0	3270
	20	4100	0	2266	6200	0	2323	7680	0	2543	8200	0	2623	10400	0	3008	12000	0	3150	12750	0	3250	14600	0	3407
	22	4050	0	2295	6150	0	2352	7600	0	2592	8100	0	2685	10310	0	3073	11940	0	3264	12870	0	3358	14540	0	3535
	24	4000	0	2323	6100	0	2380	7544	0	2639	8040	0	2745	10240	0	3139	11880	0	3378	12810	0	3475	14360	0	3666
1.5+2.5+2.5	16	3168	0	1739	5016	0	1786	5718	0	1862	6186	0	1913	7533	0	2141	8897	0	2169	9706	0	2228	11202	0	2338
	18	3124	0	1763	4972	0	1810	5664	0	1901	6125	0	1962	7454	0	2195	8853	0	2280	9671	0	2327	11158	0	2449
	20	3080	0	1786	4928	0	1833	5614	0	1932	6072	0	1998	7392	0	2233	8800	0	2350	9460	0	2432	11088	0	2562
	22	3036	0	1810	4884	0	1857	5544	0	1972	5984	0	2049	7313	0	2287	8747	0	2444	9566	0	2522	11035	0	2667
	24	2992	0	1833	4840	0	1880	5495	0	2011	5931	0	2099	7251	0	2341	8694	0	2538	9513	0	2618	10877	0	2775
1.5+2.5+3.5	16	3492	0	1939	5529	0	1991	6303	0	2076	6819	0	2133	8303	0	2387	9807	0	2418	10699	0	2484	12348	0	2607
	18	3444	0	1965	5481	0	2017	6243	0	2120	6751	0	2188	8216	0	2447	9758	0	2541	10660	0	2594	12300	0	2730
	20	3395	0	1991	5432	0	2044	6189	0	2154	6693	0	2227	8148	0	2489	9700	0	2620	10428	0	2712	12222	0	2856
	22	3347	0	2017	5384	0	2070	6111	0	2199	6596	0	2285	8061	0	2549	9642	0	2725	10544	0	2811	12164	0	2974
	24	3298	0	2044	5335	0	2096	6057	0	2242	6538	0	2340	7993	0	2610	9584	0	2830	10486	0	2919	11989	0	3094
1.5+2.5+4.2	16	3800	0	1939	5900	0	1991	6898	0	2076	7430	0	2133	9160	0	2387	10710	0	2418	11630	0	2484	13330	0	2607
	18	3750	0	1965	5850	0	2017	6836	0	2120	7360	0	2188	9070	0	2447	10660	0	2541	11590	0	2594	13280	0	2730
	20	3700	0	1991	5800	0	2044	6780	0	2154	7300	0	2227	9000	0	2489	10600	0	2620	11350	0	2712	13200	0	2856
	22	3650	0	2017	5750	0	2070	6700	0	2199	7200	0	2285	8910	0	2549	10540	0	2725	11470	0	2811	13140	0	2974
	24	3600	0	2044	5700	0	2096	6644	0	2242	7140	0	2340	8840	0	2610	10480	0	2830	11410	0	2919	12960	0	3094
1.5+2.5+5.0	16	4300	0	2279	6400	0	2336	7798	0	2560	8330	0	2622	10460	0	3033	12010	0	3067	12930	0	3140	14630	0	3276
	18	4250	0	2308	6350	0	2365	7736	0	2608	8260	0	2683	10370	0	3099	11960	0	3203	12890	0	3261	14580	0	3411
	20	4200	0	2336	6300	0	2394	7680	0	2646	8200	0	2727	10300	0	3146	11900	0	3290	12650	0	3391	14500	0	3550
	22	4150	0	2365	6250	0	2423	7600	0	2695	8100	0	2790	10210	0	3212	11840	0	3406	12770	0	3501	14440	0	3680
	24	4100	0	2394	6200	0	2452	7544	0	2743	8040	0	2851	10140	0	3278	11780	0	3521	12710	0	3619	14260	0	3813
1.5+2.5+6.0	16	4300	0	2279	6400	0	2336	7798	0	2560	8330	0	2622	10560	0	3033	12110	0	3067	13030	0	3140	14730	0	3276
	18	4250	0	2308	6350	0	2365	7736	0	2608	8260	0	2683	10470	0	3099	12060	0	3203	12990	0	3261	14680	0	3411
	20	4200	0	2336	6300	0	2394	7680	0	2646	8200	0	2727	10400	0	3146	12000	0	3290	12750	0	3391	14600	0	3550
	22	4150	0	2365	6250	0	2423	7600	0	2695	8100	0	2790	10310	0	3212	11940	0	3406	12870	0	3501	14540	0	3680
	24	4100	0	2394	6200	0	2452	7544	0	2743	8040	0	2851	10240	0	3278	11880	0	3521	12810	0	3619	14360	0	3813
1.5+3.5+3.5	16	3800	0	2213	5900	0	2272	6898	0	2369	7430	0	2434	9160	0	2724	10710	0	2760	11630	0	2835	13330	0	2975
	18	3750	0	2243	5850	0	2302	6836	0	2419	7360	0	2497	9070	0	2793	10660	0	2900	11590	0	2960	13280	0	3116
	20	3700	0	2272	5800	0	2332	6780	0	2458	7300	0	2542	9000	0	2841	10600	0	2990	11350	0	3095	13200	0	3259
	22	3650	0	2302	5750	0	2362	6700	0	2509	7200	0	2607	8910	0	2909	10540	0	3110	11470	0	3208	13140	0	3394
	24	3600	0	2332	5700	0	2392	6644	0	2559	7140	0	2670	8840	0	2978	10480	0	3229	11410	0	3331	12960	0	3531
1.5+3.5+4.2	16	4100	0	2213	6200	0	2272	7498	0	2369	8030	0	2434	10060	0	2724	11610	0	2760	12530	0	2835	14230	0	2975
	18	4050	0	2243	6150	0	2302	7436	0	2419	7960	0	2497	9970	0	2793	11560	0	2900	12490	0	2960	14180	0	3116
	20	4000	0	2272	6100	0	2332	7380	0	2458	7900	0	2542	9900	0	2841	11500	0	2990	12250	0	3095	14100	0	3259
	22	3950	0	2302	6050	0	2362	7300	0	2509	7800	0	2607	9810	0	2909	11440	0	3110	12370	0	3208	14040	0	3394
	24	3900	0	2332	6000	0	2392	7244	0	2559	7740	0	2670	9740	0	2978	11380	0	3229	12310	0	3331	13860	0	3531

	INDOOR	OUTDOOR TEMPERATURE (°CDB)																							
	EDB	-15			-10			-7			-5			0			7			10			15		
	°C	TC	SHC	PI	TC	SHC	PI	TC	SHC	PI	TC	SHC	PI	TC	SHC	PI	TC	SHC	PI	TC	SHC	PI	TC	SHC	PI
1.5+3.5+5.0	16	4300	0	2279	6400	0	1336	7798	0	2560	8330	0	2622	10560	0	3033	12110	0	3067	13030	0	3140	14730	0	3276
	18	4250	0	2308	6350	0	2365	7736	0	2608	8260	0	2683	10470	0	3099	12060	0	3203	12990	0	3261	14680	0	3411
	20	4200	0	2336	6300	0	2394	7680	0	2646	8200	0	2727	10400	0	3146	12000	0	3290	12750	0	3391	14600	0	3550
	22	4150	0	2365	6250	0	2423	7600	0	2695	8100	0	2790	10310	0	3212	11940	0	3406	12870	0	3501	14540	0	3680
	24	4100	0	2394	6200	0	2452	7544	0	2743	8040	0	2851	10240	0	3278	11880	0	3521	12810	0	3619	14360	0	3813
1.5+3.5+6.0	16	4300	0	2279	6400	0	1336	7798	0	2560	8330	0	2622	10560	0	3033	12110	0	3067	13030	0	3140	14730	0	3276
	18	4250	0	2308	6350	0	2365	7736	0	2608	8260	0	2683	10470	0	3099	12060	0	3203	12990	0	3261	14680	0	3411
	20	4200	0	2336	6300	0	2394	7680	0	2646	8200	0	2727	10400	0	3146	12000	0	3290	12750	0	3391	14600	0	3550
	22	4150	0	2365	6250	0	2423	7600	0	2695	8100	0	2790	10310	0	3212	11940	0	3406	12870	0	3501	14540	0	3680
	24	4100	0	2394	6200	0	2452	7544	0	2743	8040	0	2851	10240	0	3278	11880	0	3521	12810	0	3619	14360	0	3813
1.5+4.2+4.2	16	4300	0	2353	6400	0	2412	7798	0	2639	8330	0	2704	10560	0	3124	12110	0	3160	13030	0	3235	14730	0	3375
	18	4250	0	2383	6350	0	2442	7736	0	2689	8260	0	2767	10470	0	3193	12060	0	3300	12990	0	3360	14680	0	3516
	20	4200	0	2412	6300	0	2472	7680	0	2728	8200	0	2812	10400	0	3241	12000	0	3390	12750	0	3495	14600	0	3659
	22	4150	0	2442	6250	0	2502	7600	0	2779	8100	0	2877	10310	0	3309	11940	0	3510	12870	0	3608	14540	0	3794
	24	4100	0	2472	6200	0	2532	7544	0	2829	8040	0	2940	10240	0	3378	11880	0	3629	12810	0	3731	14360	0	3931
1.5+4.2+5.0	16	4300	0	2279	6400	0	1336	7798	0	2560	8330	0	2622	10560	0	3033	12110	0	3067	13030	0	3140	14730	0	3276
	18	4250	0	2308	6350	0	2365	7736	0	2608	8260	0	2683	10470	0	3099	12060	0	3203	12990	0	3261	14680	0	3411
	20	4200	0	2336	6300	0	2394	7680	0	2646	8200	0	2727	10400	0	3146	12000	0	3290	12750	0	3391	14600	0	3550
	22	4150	0	2365	6250	0	2423	7600	0	2695	8100	0	2790	10310	0	3212	11940	0	3406	12870	0	3501	14540	0	3680
	24	4100	0	2394	6200	0	2452	7544	0	2743	8040	0	2851	10240	0	3278	11880	0	3521	12810	0	3619	14360	0	3813
1.5+4.2+6.0	16	4300	0	2279	6400	0	1336	7798	0	2560	8330	0	2622	10560	0	3033	12110	0	3067	13030	0	3140	14730	0	3276
	18	4250	0	2308	6350	0	2365	7736	0	2608	8260	0	2683	10470	0	3099	12060	0	3203	12990	0	3261	14680	0	3411
	20	4200	0	2336	6300	0	2394	7680	0	2646	8200	0	2727	10400	0	3146	12000	0	3290	12750	0	3391	14600	0	3550
	22	4150	0	2365	6250	0	2423	7600	0	2695	8100	0	2790	10310	0	3212	11940	0	3406	12870	0	3501	14540	0	3680
	24	4100	0	2394	6200	0	2452	7544	0	2743	8040	0	2851	10240	0	3278	11880	0	3521	12810	0	3619	14360	0	3813
1.5+5.0+5.0	16	4300	0	2279	6400	0	1336	7798	0	2560	8330	0	2622	10560	0	3033	12110	0	3067	13030	0	3140	14730	0	3276
	18	4250	0	2308	6350	0	2365	7736	0	2608	8260	0	2683	10470	0	3099	12060	0	3203	12990	0	3261	14680	0	3411
	20	4200	0	2336	6300	0	2394	7680	0	2646	8200	0	2727	10400	0	3146	12000	0	3290	12750	0	3391	14600	0	3550
	22	4150	0	2365	6250	0	2423	7600	0	2695	8100	0	2790	10310	0	3212	11940	0	3406	12870	0	3501	14540	0	3680
	24	4100	0	2394	6200	0	2452	7544	0	2743	8040	0	2851	10240	0	3278	11880	0	3521	12810	0	3619	14360	0	3813
1.5+5.0+6.0	16	4300	0	2279	6400	0	1336	7798	0	2560	8330	0	2622	10560	0	3033	12110	0	3067	13030	0	3140	14730	0	3276
	18	4250	0	2308	6350	0	2365	7736	0	2608	8260	0	2683	10470	0	3099	12060	0	3203	12990	0	3261	14680	0	3411
	20	4200	0	2336	6300	0	2394	7680	0	2646	8200	0	2727	10400	0	3146	12000	0	3290	12750	0	3391	14600	0	3550
	22	4150	0	2365	6250	0	2423	7600	0	2695	8100	0	2790	10310	0	3212	11940	0	3406	12870	0	3501	14540	0	3680
	24	4100	0	2394	6200	0	2452	7544	0	2743	8040	0	2851	10240	0	3278	11880	0	3521	12810	0	3619	14360	0	3813
1.5+6.0+6.0	16	4300	0	2279	6400	0	1336	7798	0	2560	8330	0	2622	10560	0	3033	12110	0	3067	13030	0	3140	14730	0	3276
	18	4250	0	2308	6350	0	2365	7736	0	2608	8260	0	2683	10470	0	3099	12060	0	3203	12990	0	3261	14680	0	3411
	20	4200	0	2336	6300	0	2394	7680	0	2646	8200	0	2727	10400	0	3146	12000	0	3290	12750	0	3391	14600	0	3550
	22	4150	0	2365	6250	0	2423	7600	0	2695	8100	0	2790	10310	0	3212	11940	0	3406	12870	0	3501	14540	0	3680
	24	4100	0	2394	6200	0	2452	7544	0	2743	8040	0	2851	10240	0	3278	11880	0	3521	12810	0	3619	14360	0	3813

	INDOOR	OUTDOOR TEMPERATURE (°CDB)																							
	EDB	-15			-10			-7			-5			0			7			10			15		
	°C	TC	SHC	PI	TC	SHC	PI	TC	SHC	PI	TC	SHC	PI	TC	SHC	PI	TC	SHC	PI	TC	SHC	PI	TC	SHC	PI
1.8+1.8+1.8	16	2700	0	1635	4275	0	1675	4874	0	1871	5273	0	1914	6420	0	2240	7583	0	2264	8273	0	2315	9548	0	2410
	18	2663	0	1655	4238	0	1695	4827	0	1904	5220	0	1957	6353	0	2287	7545	0	2359	8243	0	2400	9510	0	2505
	20	2625	0	1675	4200	0	1716	4785	0	1930	5175	0	1987	6300	0	2319	7500	0	2420	8063	0	2491	9450	0	2602
	22	2588	0	1695	4163	0	1736	4725	0	1965	5100	0	2031	6233	0	2365	7455	0	2501	8153	0	2567	9405	0	2693
	24	2550	0	1716	4125	0	1756	4683	0	1999	5055	0	2074	6180	0	2412	7410	0	2582	8108	0	2650	9270	0	2786
1.8+1.8+2.5	16	3024	0	1705	4788	0	1750	5458	0	1891	5905	0	1939	7190	0	2223	8492	0	2250	9265	0	2305	10693	0	2409
	18	2982	0	1728	4746	0	1772	5406	0	1928	5846	0	1985	7115	0	2274	8450	0	2354	9232	0	2398	10651	0	2513
	20	2940	0	1750	4704	0	1794	5359	0	1957	5796	0	2019	7056	0	2310	8400	0	2420	9030	0	2497	10584	0	2619
	22	2898	0	1772	4662	0	1816	5292	0	1995	5712	0	2067	6980	0	2360	8350	0	2508	9131	0	2581	10534	0	2718
	24	2856	0	1794	4620	0	1838	5245	0	2031	5662	0	2114	6922	0	2411	8299	0	2597	9080	0	2672	10382	0	2820
1.8+1.8+3.5	16	3348	0	1844	5301	0	1891	6043	0	2058	6538	0	2109	7961	0	2419	9402	0	2448	10258	0	2507	11839	0	2618
	18	3302	0	1868	5255	0	1915	5985	0	2097	6473	0	2159	7877	0	2474	9356	0	2559	10221	0	2606	11792	0	2730
	20	3255	0	1891	5208	0	1939	5933	0	2128	6417	0	2195	7812	0	2512	9300	0	2630	9998	0	2713	11718	0	2843
	22	3209	0	1915	5162	0	1962	5859	0	2169	6324	0	2247	7728	0	2566	9244	0	2725	10109	0	2803	11662	0	2950
	24	3162	0	1939	5115	0	1986	5807	0	2208	6268	0	2296	7663	0	2621	9188	0	2820	10053	0	2900	11495	0	3059
1.8+1.8+4.2	16	3600	0	1844	5700	0	1891	6498	0	2058	7030	0	2109	8560	0	2429	10110	0	2458	11030	0	2517	12730	0	2628
	18	3550	0	1868	5650	0	1915	6436	0	2097	6960	0	2159	8470	0	2484	10060	0	2569	10990	0	2616	12680	0	2740
	20	3500	0	1891	5600	0	1939	6380	0	2128	6900	0	2195	8400	0	2522	10000	0	2640	10750	0	2723	12600	0	2853
	22	3450	0	1915	5550	0	1962	6300	0	2169	6800	0	2247	8310	0	2576	9940	0	2735	10870	0	2813	12540	0	2960
	24	3400	0	1939	5500	0	1986	6244	0	2208	6740	0	2296	8240	0	2631	9880	0	2830	10810	0	2910	12360	0	3069
1.8+1.8+5.0	16	4100	0	2120	6200	0	2175	7498	0	2463	8030	0	2522	10060	0	2987	11610	0	3020	12530	0	3088	14230	0	3216
	18	4050	0	2148	6150	0	2202	7436	0	2509	7960	0	2580	9970	0	3050	11560	0	3148	12490	0	3203	14180	0	3345
	20	4000	0	2175	6100	0	2229	7380	0	2544	7900	0	2621	9900	0	3094	11500	0	3230	12250	0	3326	14100	0	3476
	22	3950	0	2202	6050	0	2257	7300	0	2591	7800	0	2681	9810	0	3156	11440	0	3339	12370	0	3429	14040	0	3599
	24	3900	0	2229	6000	0	2284	7244	0	2636	7740	0	2738	9740	0	3219	11380	0	3448	12310	0	3541	13860	0	3724
1.8+1.8+6.0	16	4300	0	2120	6400	0	2175	7798	0	2463	8330	0	2522	10560	0	2987	12110	0	3020	13030	0	3088	14730	0	3216
	18	4250	0	2148	6350	0	2202	7736	0	2509	8260	0	2580	10470	0	3050	12060	0	3148	12990	0	3203	14680	0	3345
	20	4200	0	2175	6300	0	2229	7680	0	2544	8200	0	2621	10400	0	3094	12000	0	3230	12750	0	3326	14600	0	3476
	22	4150	0	2202	6250	0	2257	7600	0	2591	8100	0	2681	10310	0	3156	11940	0	3339	12870	0	3429	14540	0	3599
	24	4100	0	2229	6200	0	2284	7544	0	2636	8040	0	2738	10240	0	3219	11880	0	3448	12810	0	3541	14360	0	3724
1.8+2.5+2.5	16	3348	0	1754	5301	0	1801	6043	0	1878	6538	0	1929	7961	0	2159	9402	0	2188	10258	0	2247	11839	0	2358
	18	3302	0	1778	5255	0	1825	5985	0	1917	6473	0	1979	7877	0	2214	9356	0	2299	10221	0	2346	11792	0	2470
	20	3255	0	1801	5208	0	1849	5933	0	1948	6417	0	2015	7812	0	2252	9300	0	2370	9998	0	2453	11718	0	2583
	22	3209	0	1825	5162	0	1872	5859	0	1989	6324	0	2067	7728	0	2306	9244	0	2465	10109	0	2543	11662	0	2690
	24	3162	0	1849	5115	0	1896	5807	0	2028	6268	0	2116	7663	0	2361	9188	0	2560	10053	0	2640	11495	0	2799
1.8+2.5+3.5	16	3600	0	1872	5700	0	1923	6498	0	2005	7030	0	2059	8560	0	2305	10110	0	2335	11030	0	2398	12730	0	2517
	18	3550	0	1898	5650	0	1948	6436	0	2047	6960	0	2113	8470	0	2363	10060	0	2454	10990	0	2505	12680	0	2636
	20	3500	0	1923	5600	0	1973	6380	0	2080	6900	0	2151	8400	0	2404	10000	0	2530	10750	0	2619	12600	0	2758
	22	3450	0	1948	5550	0	1999	6300	0	2123	6800	0	2206	8310	0	2462	9940	0	2631	10870	0	2715	12540	0	2872
	24	3400	0	1973	5500	0	2024	6244	0	2165	6740	0	2259	8240	0	2520	9880	0	2732	10810	0	2818	12360	0	2988

	INDOOR	OUTDOOR TEMPERATURE (°CDB)																							
	EDB	-15			-10			-7			-5			0			7			10			15		
	°C	TC	SHC	PI	TC	SHC	PI	TC	SHC	PI	TC	SHC	PI	TC	SHC	PI	TC	SHC	PI	TC	SHC	PI	TC	SHC	PI
1.8+2.5+4.2	16	3900	0	1972	6000	0	2023	7198	0	2205	7730	0	2259	9660	0	2605	11210	0	2635	12130	0	2698	13830	0	2817
	18	3850	0	1998	5950	0	2048	7136	0	2247	7660	0	2313	9570	0	2663	11160	0	2754	12090	0	2805	13780	0	2936
	20	3800	0	2023	5900	0	2073	7080	0	2280	7600	0	2351	9500	0	2704	11100	0	2830	11850	0	2919	13700	0	3058
	22	3750	0	2048	5850	0	2099	7000	0	2323	7500	0	2406	9410	0	2762	11040	0	2931	11970	0	3015	13640	0	3172
	24	3700	0	2073	5800	0	2124	6944	0	2365	7440	0	2459	9340	0	2820	10980	0	3032	11910	0	3118	13460	0	3288
1.8+2.5+5.0	16	4300	0	2279	6400	0	1336	7798	0	2560	8330	0	2622	10560	0	3033	12110	0	3067	13030	0	3140	14730	0	3276
	18	4250	0	2308	6350	0	2365	7736	0	2608	8260	0	2683	10470	0	3099	12060	0	3203	12990	0	3261	14680	0	3411
	20	4200	0	2336	6300	0	2394	7680	0	2646	8200	0	2727	10400	0	3146	12000	0	3290	12750	0	3391	14600	0	3550
	22	4150	0	2365	6250	0	2423	7600	0	2695	8100	0	2790	10310	0	3212	11940	0	3406	12870	0	3501	14540	0	3680
	24	4100	0	2394	6200	0	2452	7544	0	2743	8040	0	2851	10240	0	3278	11880	0	3521	12810	0	3619	14360	0	3813
1.8+2.5+6.0	16	4300	0	2279	6400	0	1336	7798	0	2560	8330	0	2622	10560	0	3033	12110	0	3067	13030	0	3140	14730	0	3276
	18	4250	0	2308	6350	0	2365	7736	0	2608	8260	0	2683	10470	0	3099	12060	0	3203	12990	0	3261	14680	0	3411
	20	4200	0	2336	6300	0	2394	7680	0	2646	8200	0	2727	10400	0	3146	12000	0	3290	12750	0	3391	14600	0	3550
	22	4150	0	2365	6250	0	2423	7600	0	2695	8100	0	2790	10310	0	3212	11940	0	3406	12870	0	3501	14540	0	3680
	24	4100	0	2394	6200	0	2452	7544	0	2743	8040	0	2851	10240	0	3278	11880	0	3521	12810	0	3619	14360	0	3813
1.8+3.5+3.5	16	3900	0	2135	6000	0	2190	7198	0	2379	7730	0	2439	9660	0	2805	11210	0	2838	12130	0	2907	13830	0	3036
	18	3850	0	2163	5950	0	2218	7136	0	2425	7660	0	2496	9570	0	2869	11160	0	2968	12090	0	3023	13780	0	3166
	20	3800	0	2190	5900	0	2245	7080	0	2461	7600	0	2538	9500	0	2913	11100	0	3050	11850	0	3146	13700	0	3298
	22	3750	0	2218	5850	0	2273	7000	0	2508	7500	0	2598	9410	0	2976	11040	0	3160	11970	0	3251	13640	0	3421
	24	3700	0	2245	5800	0	2300	6944	0	2553	7440	0	2656	9340	0	3039	10980	0	3270	11910	0	3364	13460	0	3548
1.8+3.5+4.2	16	4300	0	2135	6400	0	2190	7798	0	2379	8330	0	2439	10560	0	2805	12110	0	2838	13030	0	2907	12930	0	3036
	18	4250	0	2163	6350	0	2218	7736	0	2425	8260	0	2496	10470	0	2869	12060	0	2968	12990	0	3023	12880	0	3166
	20	4200	0	2190	6300	0	2245	7680	0	2461	8200	0	2538	10400	0	2913	12000	0	3050	12750	0	3146	12800	0	3298
	22	4150	0	2218	6250	0	2273	7600	0	2508	8100	0	2598	10310	0	2976	11940	0	3160	12870	0	3251	12740	0	3421
	24	4100	0	2245	6200	0	2300	7544	0	2553	8040	0	2656	10240	0	3039	11880	0	3270	12810	0	3364	12560	0	3548
1.8+3.5+5.0	16	4300	0	2313	6400	0	2372	7798	0	2569	8330	0	2634	10560	0	3024	12110	0	3060	13030	0	3135	14730	0	3275
	18	4250	0	2343	6350	0	2402	7736	0	2419	8260	0	2697	10470	0	3093	12060	0	3200	12990	0	3260	14680	0	3416
	20	4200	0	2372	6300	0	2432	7680	0	2658	8200	0	2742	10400	0	3141	12000	0	3290	12750	0	3395	14600	0	3559
	22	4150	0	2402	6250	0	2462	7600	0	2709	8100	0	2807	10310	0	3209	11940	0	3410	12870	0	3508	14540	0	3694
	24	4100	0	2432	6200	0	2492	7544	0	2759	8040	0	2870	10240	0	3278	11880	0	3529	12810	0	3631	14360	0	3831
1.8+3.5+6.0	16	4300	0	2313	6400	0	2372	7798	0	2569	8330	0	2634	10560	0	3024	12110	0	3060	13030	0	3135	14730	0	3275
	18	4250	0	2343	6350	0	2402	7736	0	2419	8260	0	2697	10470	0	3093	12060	0	3200	12990	0	3260	14680	0	3416
	20	4200	0	2372	6300	0	2432	7680	0	2658	8200	0	2742	10400	0	3141	12000	0	3290	12750	0	3395	14600	0	3559
	22	4150	0	2402	6250	0	2462	7600	0	2709	8100	0	2807	10310	0	3209	11940	0	3410	12870	0	3508	14540	0	3694
	24	4100	0	2432	6200	0	2492	7544	0	2759	8040	0	2870	10240	0	3278	11880	0	3529	12810	0	3631	14360	0	3831
1.8+4.2+4.2	16	4300	0	2215	6400	0	2270	7798	0	2539	8330	0	2599	10560	0	3045	12110	0	3078	13030	0	3147	14730	0	3276
	18	4250	0	2243	6350	0	2298	7736	0	2585	8260	0	2656	10470	0	3109	12060	0	3208	12990	0	3263	14680	0	3406
	20	4200	0	2270	6300	0	2325	7680	0	2621	8200	0	2698	10400	0	3153	12000	0	3290	12750	0	3386	14600	0	3538
	22	4150	0	2298	6250	0	2353	7600	0	2668	8100	0	2758	10310	0	3216	11940	0	3400	12870	0	3491	14540	0	3661
	24	4100	0	2325	6200	0	2380	7544	0	2713	8040	0	2816	10240	0	3279	11880	0	3510	12810	0	3604	14360	0	3788

	INDOOR	OUTDOOR TEMPERATURE (°CDB)																							
	EDB	-15			-10			-7			-5			0			7			10			15		
	°C	TC	SHC	PI	TC	SHC	PI	TC	SHC	PI	TC	SHC	PI	TC	SHC	PI	TC	SHC	PI	TC	SHC	PI	TC	SHC	PI
1.8+4.2+5.0	16	4300	0	2313	6400	0	2372	7798	0	2569	8330	0	2634	10560	0	3024	12110	0	3060	13030	0	3135	14730	0	3275
	18	4250	0	2343	6350	0	2402	7736	0	2419	8260	0	2697	10470	0	3093	12060	0	3200	12990	0	3260	14680	0	3416
	20	4200	0	2372	6300	0	2432	7680	0	2658	8200	0	2742	10400	0	3141	12000	0	3290	12750	0	3395	14600	0	3559
	22	4150	0	2402	6250	0	2462	7600	0	2709	8100	0	2807	10310	0	3209	11940	0	3410	12870	0	3508	14540	0	3694
	24	4100	0	2432	6200	0	2492	7544	0	2759	8040	0	2870	10240	0	3278	11880	0	3529	12810	0	3631	14360	0	3831
1.8+4.2+6.0	16	4300	0	2313	6400	0	2372	7798	0	2569	8330	0	2634	10560	0	3024	12110	0	3060	13030	0	3135	14730	0	3275
	18	4250	0	2343	6350	0	2402	7736	0	2419	8260	0	2697	10470	0	3093	12060	0	3200	12990	0	3260	14680	0	3416
	20	4200	0	2372	6300	0	2432	7680	0	2658	8200	0	2742	10400	0	3141	12000	0	3290	12750	0	3395	14600	0	3559
	22	4150	0	2402	6250	0	2462	7600	0	2709	8100	0	2807	10310	0	3209	11940	0	3410	12870	0	3508	14540	0	3694
	24	4100	0	2432	6200	0	2492	7544	0	2759	8040	0	2870	10240	0	3278	11880	0	3529	12810	0	3631	14360	0	3831
1.8+5.0+5.0	16	4300	0	2373	6400	0	2432	7798	0	2689	8330	0	2754	10560	0	3224	12110	0	3260	13030	0	3335	14730	0	3475
	18	4250	0	2403	6350	0	2462	7736	0	2539	8260	0	2817	10470	0	3293	12060	0	3400	12990	0	3460	14680	0	3616
	20	4200	0	2432	6300	0	2492	7680	0	2778	8200	0	2862	10400	0	3341	12000	0	3490	12750	0	3595	14600	0	3759
	22	4150	0	2462	6250	0	2522	7600	0	2829	8100	0	2927	10310	0	3409	11940	0	3610	12870	0	3708	14540	0	3894
	24	4100	0	2492	6200	0	2552	7544	0	2879	8040	0	2990	10240	0	3478	11880	0	3729	12810	0	3831	14360	0	4031
1.8+5.0+6.0	16	4300	0	2373	6400	0	2432	7798	0	2689	8330	0	2754	10560	0	3224	12110	0	3260	13030	0	3335	14730	0	3475
	18	4250	0	2403	6350	0	2462	7736	0	2539	8260	0	2817	10470	0	3293	12060	0	3400	12990	0	3460	14680	0	3616
	20	4200	0	2432	6300	0	2492	7680	0	2778	8200	0	2862	10400	0	3341	12000	0	3490	12750	0	3595	14600	0	3759
	22	4150	0	2462	6250	0	2522	7600	0	2829	8100	0	2927	10310	0	3409	11940	0	3610	12870	0	3708	14540	0	3894
	24	4100	0	2492	6200	0	2552	7544	0	2879	8040	0	2990	10240	0	3478	11880	0	3729	12810	0	3831	14360	0	4031
1.8+6.0+6.0	16	4300	0	2373	6400	0	2432	7798	0	2689	8330	0	2754	10560	0	3224	12110	0	3260	13030	0	3335	14730	0	3475
	18	4250	0	2403	6350	0	2462	7736	0	2539	8260	0	2817	10470	0	3293	12060	0	3400	12990	0	3460	14680	0	3616
	20	4200	0	2432	6300	0	2492	7680	0	2778	8200	0	2862	10400	0	3341	12000	0	3490	12750	0	3595	14600	0	3759
	22	4150	0	2462	6250	0	2522	7600	0	2829	8100	0	2927	10310	0	3409	11940	0	3610	12870	0	3708	14540	0	3894
	24	4100	0	2492	6200	0	2552	7544	0	2879	8040	0	2990	10240	0	3478	11880	0	3729	12810	0	3831	14360	0	4031
2.5+2.5+2.5	16	3600	0	1880	5700	0	1930	6498	0	2013	7030	0	2068	8560	0	2314	10110	0	2344	11030	0	2408	12730	0	2527
	18	3550	0	1905	5650	0	1956	6436	0	2055	6960	0	2121	8470	0	2372	10060	0	2464	10990	0	2515	12680	0	2647
	20	3500	0	1930	5600	0	1981	6380	0	2088	6900	0	2159	8400	0	2413	10000	0	2540	10750	0	2629	12600	0	2769
	22	3450	0	1956	5550	0	2007	6300	0	2132	6800	0	2215	8310	0	2471	9940	0	2642	10870	0	2725	12540	0	2883
	24	3400	0	1981	5500	0	2032	6244	0	2174	6740	0	2268	8240	0	2530	9880	0	2743	10810	0	2830	12360	0	3000
2.5+2.5+3.5	16	4000	0	2020	6100	0	2075	7198	0	2163	7730	0	2222	9560	0	2487	11110	0	2520	12030	0	2588	13730	0	2716
	18	3950	0	2048	6050	0	2102	7136	0	2209	7660	0	2280	9470	0	2550	11060	0	2648	11990	0	2703	13680	0	2845
	20	3900	0	2075	6000	0	2129	7080	0	2244	7600	0	2321	9400	0	2594	11000	0	2730	11750	0	2826	13600	0	2976
	22	3850	0	2102	5950	0	2157	7000	0	2291	7500	0	2381	9310	0	2656	10940	0	2839	11870	0	2929	13540	0	3099
	24	3800	0	2129	5900	0	2184	6944	0	2336	7440	0	2438	9240	0	2719	10880	0	2948	11810	0	3041	13360	0	3224
2.5+2.5+4.2	16	4300	0	2090	6400	0	2145	7798	0	2303	8330	0	2362	10560	0	2687	12110	0	2720	13030	0	2788	14730	0	2916
	18	4250	0	2118	6350	0	2172	7736	0	2349	8260	0	2420	10470	0	2750	12060	0	2848	12990	0	2903	14680	0	3045
	20	4200	0	2145	6300	0	2199	7680	0	2384	8200	0	2461	10400	0	2794	12000	0	2930	12750	0	3026	14600	0	3176
	22	4150	0	2172	6250	0	2227	7600	0	2431	8100	0	2521	10310	0	2856	11940	0	3039	12870	0	3129	14540	0	3299
	24	4100	0	2199	6200	0	2254	7544	0	2476	8040	0	2578	10240	0	2919	11880	0	3148	12810	0	3241	14360	0	3424

	INDOOR	OUTDOOR TEMPERATURE (°CDB)																							
	EDB	-15			-10			-7			-5			0			7			10			15		
	°C	TC	SHC	PI	TC	SHC	PI	TC	SHC	PI	TC	SHC	PI	TC	SHC	PI	TC	SHC	PI	TC	SHC	PI	TC	SHC	PI
2.5+2.5+5.0	16	4300	0	2283	6400	0	2342	7798	0	2509	8330	0	2574	10560	0	2924	12110	0	2960	13030	0	3035	14730	0	3175
	18	4250	0	2313	6350	0	2372	7736	0	2359	8260	0	2637	10470	0	2993	12060	0	3100	12990	0	3160	14680	0	3316
	20	4200	0	2342	6300	0	2402	7680	0	2598	8200	0	2682	10400	0	3041	12000	0	3190	12750	0	3295	14600	0	3459
	22	4150	0	2372	6250	0	2432	7600	0	2649	8100	0	2747	10310	0	3109	11940	0	3310	12870	0	3408	14540	0	3594
	24	4100	0	2402	6200	0	2462	7544	0	2699	8040	0	2810	10240	0	3178	11880	0	3429	12810	0	3531	14360	0	3731
2.5+2.5+6.0	16	4300	0	2283	6400	0	2342	7798	0	2509	8330	0	2574	10560	0	2924	12110	0	2960	13030	0	3035	14730	0	3175
	18	4250	0	2313	6350	0	2372	7736	0	2359	8260	0	2637	10470	0	2993	12060	0	3100	12990	0	3160	14680	0	3316
	20	4200	0	2342	6300	0	2402	7680	0	2598	8200	0	2682	10400	0	3041	12000	0	3190	12750	0	3295	14600	0	3459
	22	4150	0	2372	6250	0	2432	7600	0	2649	8100	0	2747	10310	0	3109	11940	0	3310	12870	0	3408	14540	0	3594
	24	4100	0	2402	6200	0	2462	7544	0	2699	8040	0	2810	10240	0	3178	11880	0	3429	12810	0	3531	14360	0	3731
2.5+3.5+3.5	16	4300	0	2139	6400	0	2196	7798	0	2290	8330	0	2352	10560	0	2633	12110	0	2667	13030	0	2740	14730	0	2876
	18	4250	0	2168	6350	0	2225	7736	0	2338	8260	0	2413	10470	0	2699	12060	0	2803	12990	0	2861	14680	0	3011
	20	4200	0	2196	6300	0	2254	7680	0	2376	8200	0	2457	10400	0	2746	12000	0	2890	12750	0	2991	14600	0	3150
	22	4150	0	2225	6250	0	2283	7600	0	2425	8100	0	2520	10310	0	2812	11940	0	3006	12870	0	3101	14540	0	3280
	24	4100	0	2254	6200	0	2312	7544	0	2473	8040	0	2581	10240	0	2878	11880	0	3121	12810	0	3219	14360	0	3413
2.5+3.5+4.2	16	4300	0	2179	6400	0	2236	7798	0	2360	8330	0	2422	10560	0	2733	12110	0	2767	13030	0	2840	12930	0	2976
	18	4250	0	2208	6350	0	2265	7736	0	2408	8260	0	2483	10470	0	2799	12060	0	2903	12990	0	2961	12880	0	3111
	20	4200	0	2236	6300	0	2294	7680	0	2446	8200	0	2527	10400	0	2846	12000	0	2990	12750	0	3091	12800	0	3250
	22	4150	0	2265	6250	0	2323	7600	0	2495	8100	0	2590	10310	0	2912	11940	0	3106	12870	0	3201	12740	0	3380
	24	4100	0	2294	6200	0	2352	7544	0	2543	8040	0	2651	10240	0	2978	11880	0	3221	12810	0	3319	12560	0	3513
2.5+3.5+5.0	16	4300	0	2283	6400	0	2342	7798	0	2509	8330	0	2574	10560	0	2924	12110	0	2960	13030	0	3035	14730	0	3175
	18	4250	0	2313	6350	0	2372	7736	0	2359	8260	0	2637	10470	0	2993	12060	0	3100	12990	0	3160	14680	0	3316
	20	4200	0	2342	6300	0	2402	7680	0	2598	8200	0	2682	10400	0	3041	12000	0	3190	12750	0	3295	14600	0	3459
	22	4150	0	2372	6250	0	2432	7600	0	2649	8100	0	2747	10310	0	3109	11940	0	3310	12870	0	3408	14540	0	3594
	24	4100	0	2402	6200	0	2462	7544	0	2699	8040	0	2810	10240	0	3178	11880	0	3429	12810	0	3531	14360	0	3731
2.5+3.5+6.0	16	4300	0	2283	6400	0	2342	7798	0	2509	8330	0	2574	10560	0	2924	12110	0	2960	13030	0	3035	14730	0	3175
	18	4250	0	2313	6350	0	2372	7736	0	2359	8260	0	2637	10470	0	2993	12060	0	3100	12990	0	3160	14680	0	3316
	20	4200	0	2342	6300	0	2402	7680	0	2598	8200	0	2682	10400	0	3041	12000	0	3190	12750	0	3295	14600	0	3459
	22	4150	0	2372	6250	0	2432	7600	0	2649	8100	0	2747	10310	0	3109	11940	0	3310	12870	0	3408	14540	0	3594
	24	4100	0	2402	6200	0	2462	7544	0	2699	8040	0	2810	10240	0	3178	11880	0	3429	12810	0	3531	14360	0	3731
2.5+4.2+4.2	16	4300	0	2279	6400	0	1336	7798	0	2560	8330	0	2622	10560	0	3033	12110	0	3067	13030	0	3140	14730	0	3276
	18	4250	0	2308	6350	0	2365	7736	0	2608	8260	0	2683	10470	0	3099	12060	0	3203	12990	0	3261	14680	0	3411
	20	4200	0	2336	6300	0	2394	7680	0	2646	8200	0	2727	10400	0	3146	12000	0	3290	12750	0	3391	14600	0	3550
	22	4150	0	2365	6250	0	2423	7600	0	2695	8100	0	2790	10310	0	3212	11940	0	3406	12870	0	3501	14540	0	3680
	24	4100	0	2394	6200	0	2452	7544	0	2743	8040	0	2851	10240	0	3278	11880	0	3521	12810	0	3619	14360	0	3813
2.5+4.2+5.0	16	4300	0	2313	6400	0	2372	7798	0	2569	8330	0	2634	10560	0	3024	12110	0	3060	13030	0	3135	14730	0	3275
	18	4250	0	2343	6350	0	2402	7736	0	2419	8260	0	2697	10470	0	3093	12060	0	3200	12990	0	3260	14680	0	3416
	20	4200	0	2372	6300	0	2432	7680	0	2658	8200	0	2742	10400	0	3141	12000	0	3290	12750	0	3395	14600	0	3559
	22	4150	0	2402	6250	0	2462	7600	0	2709	8100	0	2807	10310	0	3209	11940	0	3410	12870	0	3508	14540	0	3694
	24	4100	0	2432	6200	0	2492	7544	0	2759	8040	0	2870	10240	0	3278	11880	0	3529	12810	0	3631	14360	0	3831

	INDOOR	OUTDOOR TEMPERATURE (°CDB)																							
	EDB	-15			-10			-7			-5			0			7			10			15		
	°C	TC	SHC	PI	TC	SHC	PI	TC	SHC	PI	TC	SHC	PI	TC	SHC	PI	TC	SHC	PI	TC	SHC	PI	TC	SHC	PI
2.5+4.2+6.0	16	4300	0	2373	6400	0	2432	7798	0	2689	8330	0	2754	10560	0	3224	12110	0	3260	13030	0	3335	14730	0	3475
	18	4250	0	2403	6350	0	2462	7736	0	2539	8260	0	2817	10470	0	3293	12060	0	3400	12990	0	3460	14680	0	3616
	20	4200	0	2432	6300	0	2492	7680	0	2778	8200	0	2862	10400	0	3341	12000	0	3490	12750	0	3595	14600	0	3759
	22	4150	0	2462	6250	0	2522	7600	0	2829	8100	0	2927	10310	0	3409	11940	0	3610	12870	0	3708	14540	0	3894
	24	4100	0	2492	6200	0	2552	7544	0	2879	8040	0	2990	10240	0	3478	11880	0	3729	12810	0	3831	14360	0	4031
2.5+5.0+5.0	16	4300	0	2373	6400	0	2432	7798	0	2689	8330	0	2754	10560	0	3224	12110	0	3260	13030	0	3335	14730	0	3475
	18	4250	0	2403	6350	0	2462	7736	0	2539	8260	0	2817	10470	0	3293	12060	0	3400	12990	0	3460	14680	0	3616
	20	4200	0	2432	6300	0	2492	7680	0	2778	8200	0	2862	10400	0	3341	12000	0	3490	12750	0	3595	14600	0	3759
	22	4150	0	2462	6250	0	2522	7600	0	2829	8100	0	2927	10310	0	3409	11940	0	3610	12870	0	3708	14540	0	3894
	24	4100	0	2492	6200	0	2552	7544	0	2879	8040	0	2990	10240	0	3478	11880	0	3729	12810	0	3831	14360	0	4031
2.5+5.0+6.0	16	4300	0	2373	6400	0	2432	7798	0	2689	8330	0	2754	10560	0	3224	12110	0	3260	13030	0	3335	14730	0	3475
	18	4250	0	2403	6350	0	2462	7736	0	2539	8260	0	2817	10470	0	3293	12060	0	3400	12990	0	3460	14680	0	3616
	20	4200	0	2432	6300	0	2492	7680	0	2778	8200	0	2862	10400	0	3341	12000	0	3490	12750	0	3595	14600	0	3759
	22	4150	0	2462	6250	0	2522	7600	0	2829	8100	0	2927	10310	0	3409	11940	0	3610	12870	0	3708	14540	0	3894
	24	4100	0	2492	6200	0	2552	7544	0	2879	8040	0	2990	10240	0	3478	11880	0	3729	12810	0	3831	14360	0	4031
2.5+6.0+6.0	16	4300	0	2373	6400	0	2432	7798	0	2689	8330	0	2754	10560	0	3224	12110	0	3260	13030	0	3335	14730	0	3475
	18	4250	0	2403	6350	0	2462	7736	0	2539	8260	0	2817	10470	0	3293	12060	0	3400	12990	0	3460	14680	0	3616
	20	4200	0	2432	6300	0	2492	7680	0	2778	8200	0	2862	10400	0	3341	12000	0	3490	12750	0	3595	14600	0	3759
	22	4150	0	2462	6250	0	2522	7600	0	2829	8100	0	2927	10310	0	3409	11940	0	3610	12870	0	3708	14540	0	3894
	24	4100	0	2492	6200	0	2552	7544	0	2879	8040	0	2990	10240	0	3478	11880	0	3729	12810	0	3831	14360	0	4031
3.5+3.5+3.5	16	4300	0	2313	6400	0	2372	7798	0	2569	8330	0	2634	10560	0	3024	12110	0	3060	13030	0	3135	14730	0	3275
	18	4250	0	2343	6350	0	2402	7736	0	2419	8260	0	2697	10470	0	3093	12060	0	3200	12990	0	3260	14680	0	3416
	20	4200	0	2372	6300	0	2432	7680	0	2658	8200	0	2742	10400	0	3141	12000	0	3290	12750	0	3395	14600	0	3559
	22	4150	0	2402	6250	0	2462	7600	0	2709	8100	0	2807	10310	0	3209	11940	0	3410	12870	0	3508	14540	0	3694
	24	4100	0	2432	6200	0	2492	7544	0	2759	8040	0	2870	10240	0	3278	11880	0	3529	12810	0	3631	14360	0	3831
3.5+3.5+4.2	16	4300	0	2313	6400	0	2372	7798	0	2569	8330	0	2634	10560	0	3024	12110	0	3060	13030	0	3135	14730	0	3275
	18	4250	0	2343	6350	0	2402	7736	0	2419	8260	0	2697	10470	0	3093	12060	0	3200	12990	0	3260	14680	0	3416
	20	4200	0	2372	6300	0	2432	7680	0	2658	8200	0	2742	10400	0	3141	12000	0	3290	12750	0	3395	14600	0	3559
	22	4150	0	2402	6250	0	2462	7600	0	2709	8100	0	2807	10310	0	3209	11940	0	3410	12870	0	3508	14540	0	3694
	24	4100	0	2432	6200	0	2492	7544	0	2759	8040	0	2870	10240	0	3278	11880	0	3529	12810	0	3631	14360	0	3831
3.5+3.5+5.0	16	4300	0	2313	6400	0	2372	7798	0	2569	8330	0	2634	10560	0	3024	12110	0	3060	13030	0	3135	14730	0	3275
	18	4250	0	2343	6350	0	2402	7736	0	2419	8260	0	2697	10470	0	3093	12060	0	3200	12990	0	3260	14680	0	3416
	20	4200	0	2372	6300	0	2432	7680	0	2658	8200	0	2742	10400	0	3141	12000	0	3290	12750	0	3395	14600	0	3559
	22	4150	0	2402	6250	0	2462	7600	0	2709	8100	0	2807	10310	0	3209	11940	0	3410	12870	0	3508	14540	0	3694
	24	4100	0	2432	6200	0	2492	7544	0	2759	8040	0	2870	10240	0	3278	11880	0	3529	12810	0	3631	14360	0	3831
3.5+3.5+6.0	16	4300	0	2313	6400	0	2372	7798	0	2569	8330	0	2634	10560	0	3024	12110	0	3060	13030	0	3135	14730	0	3275
	18	4250	0	2343	6350	0	2402	7736	0	2419	8260	0	2697	10470	0	3093	12060	0	3200	12990	0	3260	14680	0	3416
	20	4200	0	2372	6300	0	2432	7680	0	2658	8200	0	2742	10400	0	3141	12000	0	3290	12750	0	3395	14600	0	3559
	22	4150	0	2402	6250	0	2462	7600	0	2709	8100	0	2807	10310	0	3209	11940	0	3410	12870	0	3508	14540	0	3694
	24	4100	0	2432	6200	0	2492	7544	0	2759	8040	0	2870	10240	0	3278	11880	0	3529	12810	0	3631	14360	0	3831

	INDOOR	OUTDOOR TEMPERATURE (°CDB)																							
	EDB	-15			-10			-7			-5			0			7			10			15		
	°C	TC	SHC	PI	TC	SHC	PI	TC	SHC	PI	TC	SHC	PI	TC	SHC	PI	TC	SHC	PI	TC	SHC	PI	TC	SHC	PI
3.5+4.2+4.2	16	4300	0	2313	6400	0	2372	7798	0	2569	8330	0	2634	10560	0	3024	12110	0	3060	13030	0	3135	14730	0	3275
	18	4250	0	2343	6350	0	2402	7736	0	2419	8260	0	2697	10470	0	3093	12060	0	3200	12990	0	3260	14680	0	3416
	20	4200	0	2372	6300	0	2432	7680	0	2658	8200	0	2742	10400	0	3141	12000	0	3290	12750	0	3395	14600	0	3559
	22	4150	0	2402	6250	0	2462	7600	0	2709	8100	0	2807	10310	0	3209	11940	0	3410	12870	0	3508	14540	0	3694
	24	4100	0	2432	6200	0	2492	7544	0	2759	8040	0	2870	10240	0	3278	11880	0	3529	12810	0	3631	14360	0	3831
3.5+4.2+5.0	16	4300	0	2373	6400	0	2432	7798	0	2689	8330	0	2754	10560	0	3224	12110	0	3260	13030	0	3335	14730	0	3475
	18	4250	0	2403	6350	0	2462	7736	0	2539	8260	0	2817	10470	0	3293	12060	0	3400	12990	0	3460	14680	0	3616
	20	4200	0	2432	6300	0	2492	7680	0	2778	8200	0	2862	10400	0	3341	12000	0	3490	12750	0	3595	14600	0	3759
	22	4150	0	2462	6250	0	2522	7600	0	2829	8100	0	2927	10310	0	3409	11940	0	3610	12870	0	3708	14540	0	3894
	24	4100	0	2492	6200	0	2552	7544	0	2879	8040	0	2990	10240	0	3478	11880	0	3729	12810	0	3831	14360	0	4031
3.5+4.2+6.0	16	4300	0	2373	6400	0	2432	7798	0	2689	8330	0	2754	10560	0	3224	12110	0	3260	13030	0	3335	14730	0	3475
	18	4250	0	2403	6350	0	2462	7736	0	2539	8260	0	2817	10470	0	3293	12060	0	3400	12990	0	3460	14680	0	3616
	20	4200	0	2432	6300	0	2492	7680	0	2778	8200	0	2862	10400	0	3341	12000	0	3490	12750	0	3595	14600	0	3759
	22	4150	0	2462	6250	0	2522	7600	0	2829	8100	0	2927	10310	0	3409	11940	0	3610	12870	0	3708	14540	0	3894
	24	4100	0	2492	6200	0	2552	7544	0	2879	8040	0	2990	10240	0	3478	11880	0	3729	12810	0	3831	14360	0	4031
3.5+5.0+5.0	16	4300	0	2373	6400	0	2432	7798	0	2689	8330	0	2754	10560	0	3224	12110	0	3260	13030	0	3335	14730	0	3475
	18	4250	0	2403	6350	0	2462	7736	0	2539	8260	0	2817	10470	0	3293	12060	0	3400	12990	0	3460	14680	0	3616
	20	4200	0	2432	6300	0	2492	7680	0	2778	8200	0	2862	10400	0	3341	12000	0	3490	12750	0	3595	14600	0	3759
	22	4150	0	2462	6250	0	2522	7600	0	2829	8100	0	2927	10310	0	3409	11940	0	3610	12870	0	3708	14540	0	3894
	24	4100	0	2492	6200	0	2552	7544	0	2879	8040	0	2990	10240	0	3478	11880	0	3729	12810	0	3831	14360	0	4031
3.5+5.0+6.0	16	4300	0	2443	6400	0	2502	7798	0	2829	8330	0	2894	10560	0	3424	12110	0	3460	13030	0	3535	14730	0	3675
	18	4250	0	2473	6350	0	2512	7736	0	2679	8260	0	2957	10470	0	3493	12060	0	3600	12990	0	3660	14680	0	3816
	20	4200	0	2502	6300	0	2562	7680	0	2918	8200	0	3002	10400	0	3541	12000	0	3690	12750	0	3795	14600	0	3959
	22	4150	0	2532	6250	0	2592	7600	0	2969	8100	0	3067	10310	0	3609	11940	0	3810	12870	0	3908	14540	0	4094
	24	4100	0	2552	6200	0	2622	7544	0	3019	8040	0	3130	10240	0	3678	11880	0	3929	12810	0	4031	14360	0	4231
3.5+6.0+6.0	16	4300	0	2443	6400	0	2502	7798	0	2829	8330	0	2894	10560	0	3424	12110	0	3460	13030	0	3535	14730	0	3675
	18	4250	0	2473	6350	0	2512	7736	0	2679	8260	0	2957	10470	0	3493	12060	0	3600	12990	0	3660	14680	0	3816
	20	4200	0	2502	6300	0	2562	7680	0	2918	8200	0	3002	10400	0	3541	12000	0	3690	12750	0	3795	14600	0	3959
	22	4150	0	2532	6250	0	2592	7600	0	2969	8100	0	3067	10310	0	3609	11940	0	3810	12870	0	3908	14540	0	4094
	24	4100	0	2552	6200	0	2622	7544	0	3019	8040	0	3130	10240	0	3678	11880	0	3929	12810	0	4031	14360	0	4231
4.2+4.2+4.2	16	4300	0	2443	6400	0	2502	7798	0	2829	8330	0	2894	10560	0	3424	12110	0	3460	13030	0	3535	14730	0	3675
	18	4250	0	2473	6350	0	2512	7736	0	2679	8260	0	2957	10470	0	3493	12060	0	3600	12990	0	3660	14680	0	3816
	20	4200	0	2502	6300	0	2562	7680	0	2918	8200	0	3002	10400	0	3541	12000	0	3690	12750	0	3795	14600	0	3959
	22	4150	0	2532	6250	0	2592	7600	0	2969	8100	0	3067	10310	0	3609	11940	0	3810	12870	0	3908	14540	0	4094
	24	4100	0	2552	6200	0	2622	7544	0	3019	8040	0	3130	10240	0	3678	11880	0	3929	12810	0	4031	14360	0	4231
4.2+4.2+5.0	16	4300	0	2443	6400	0	2502	7798	0	2829	8330	0	2894	10560	0	3424	12110	0	3460	13030	0	3535	14730	0	3675
	18	4250	0	2473	6350	0	2512	7736	0	2679	8260	0	2957	10470	0	3493	12060	0	3600	12990	0	3660	14680	0	3816
	20	4200	0	2502	6300	0	2562	7680	0	2918	8200	0	3002	10400	0	3541	12000	0	3690	12750	0	3795	14600	0	3959
	22	4150	0	2532	6250	0	2592	7600	0	2969	8100	0	3067	10310	0	3609	11940	0	3810	12870	0	3908	14540	0	4094
	24	4100	0	2552	6200	0	2622	7544	0	3019	8040	0	3130	10240	0	3678	11880	0	3929	12810	0	4031	14360	0	4231

	INDOOR	OUTDOOR TEMPERATURE (°CDB)																							
	EDB	-15			-10			-7			-5			0			7			10			15		
	°C	TC	SHC	PI	TC	SHC	PI	TC	SHC	PI	TC	SHC	PI	TC	SHC	PI	TC	SHC	PI	TC	SHC	PI	TC	SHC	PI
4.2+4.2+6.0	16	4300	0	2513	6400	0	2572	7798	0	2969	8330	0	3034	10560	0	3624	12110	0	3660	13030	0	3735	14730	0	3875
	18	4250	0	2543	6350	0	2602	7736	0	3019	8260	0	3097	10470	0	3693	12060	0	3800	12990	0	3860	14680	0	4016
	20	4200	0	2572	6300	0	2632	7680	0	3058	8200	0	3142	10400	0	3741	12000	0	3890	12750	0	3995	14600	0	4159
	22	4150	0	2602	6250	0	2662	7600	0	3109	8100	0	3207	10310	0	3809	11940	0	4010	12870	0	4108	14540	0	4294
	24	4100	0	2632	6200	0	2692	7544	0	3159	8040	0	3270	10240	0	3878	11880	0	4129	12810	0	4231	14360	0	4431
4.2+5.0+5.0	16	4300	0	2513	6400	0	2572	7798	0	2969	8330	0	3034	10560	0	3624	12110	0	3660	13030	0	3735	14730	0	3875
	18	4250	0	2543	6350	0	2602	7736	0	3019	8260	0	3097	10470	0	3693	12060	0	3800	12990	0	3860	14680	0	4016
	20	4200	0	2572	6300	0	2632	7680	0	3058	8200	0	3142	10400	0	3741	12000	0	3890	12750	0	3995	14600	0	4159
	22	4150	0	2602	6250	0	2662	7600	0	3109	8100	0	3207	10310	0	3809	11940	0	4010	12870	0	4108	14540	0	4294
	24	4100	0	2632	6200	0	2692	7544	0	3159	8040	0	3270	10240	0	3878	11880	0	4129	12810	0	4231	14360	0	4431
4.2+5.0+6.0	16	4300	0	2613	6400	0	2672	7798	0	3169	8330	0	3234	10560	0	3924	12110	0	3960	13030	0	4035	14730	0	4175
	18	4250	0	2643	6350	0	2702	7736	0	3219	8260	0	3297	10470	0	3993	12060	0	4100	12990	0	4160	14680	0	4316
	20	4200	0	2672	6300	0	2732	7680	0	3258	8200	0	3342	10400	0	4041	12000	0	4190	12750	0	4295	14600	0	4459
	22	4150	0	2702	6250	0	2762	7600	0	3309	8100	0	3407	10310	0	4109	11940	0	4310	12870	0	4408	14540	0	4594
	24	4100	0	2732	6200	0	2792	7544	0	3359	8040	0	3470	10240	0	4178	11880	0	4429	12810	0	4531	14360	0	4731
5.0+5.0+5.0	16	4300	0	2579	6400	0	1636	7798	0	3160	8330	0	3222	10560	0	3933	12110	0	3967	13030	0	4040	14730	0	4176
	18	4250	0	2608	6350	0	2665	7736	0	3208	8260	0	3283	10470	0	3999	12060	0	4103	12990	0	4161	14680	0	4311
	20	4200	0	2636	6300	0	2694	7680	0	3246	8200	0	3327	10400	0	4046	12000	0	4190	12750	0	4291	14600	0	4450
	22	4150	0	2665	6250	0	2723	7600	0	3295	8100	0	3390	10310	0	4112	11940	0	4306	12870	0	4401	14540	0	4580
	24	4100	0	2694	6200	0	2752	7544	0	3343	8040	0	3451	10240	0	4178	11880	0	4421	12810	0	4519	14360	0	4713
5.0+5.0+6.0	16	4300	0	2579	6400	0	1636	7798	0	3160	8330	0	3222	10560	0	3933	12110	0	3967	13030	0	4040	14730	0	4176
	18	4250	0	2608	6350	0	2665	7736	0	3208	8260	0	3283	10470	0	3999	12060	0	4103	12990	0	4161	14680	0	4311
	20	4200	0	2636	6300	0	2694	7680	0	3246	8200	0	3327	10400	0	4046	12000	0	4190	12750	0	4291	14600	0	4450
	22	4150	0	2665	6250	0	2723	7600	0	3295	8100	0	3390	10310	0	4112	11940	0	4306	12870	0	4401	14540	0	4580
	24	4100	0	2694	6200	0	2752	7544	0	3343	8040	0	3451	10240	0	4178	11880	0	4421	12810	0	4519	14360	0	4713
1.5+1.5 +1.5+1.5	16	2880	0	1480	4560	0	1520	5198	0	1585	5624	0	1628	6848	0	1822	8088	0	1846	8824	0	1896	10184	0	1990
	18	2840	0	1500	4520	0	1540	5149	0	1618	5568	0	1670	6776	0	1868	8048	0	1940	8792	0	1980	10144	0	2084
	20	2800	0	1520	4480	0	1560	5104	0	1644	5520	0	1700	6720	0	1900	8000	0	2000	8600	0	2070	10080	0	2180
	22	2760	0	1540	4440	0	1580	5040	0	1678	5440	0	1744	6648	0	1946	7952	0	2080	8696	0	2146	10032	0	2270
	24	2720	0	1560	4400	0	1600	4995	0	1712	5392	0	1786	6592	0	1992	7904	0	2160	8648	0	2228	9888	0	2362
1.5+1.5 +1.5+1.8	16	3060	0	1628	4845	0	1672	5523	0	1743	5976	0	1791	7276	0	2004	8594	0	2031	9376	0	2086	10821	0	2189
	18	3018	0	1650	4803	0	1694	5471	0	1780	5916	0	1837	7200	0	2055	8551	0	2134	9342	0	2178	10778	0	2292
	20	2975	0	1672	4760	0	1716	5423	0	1808	5865	0	1870	7140	0	2090	8500	0	2200	9138	0	2277	10710	0	2398
	22	2933	0	1694	4718	0	1738	5355	0	1846	5780	0	1918	7064	0	2141	8449	0	2288	9240	0	2361	10659	0	2497
	24	2890	0	1716	4675	0	1760	5307	0	1883	5729	0	1965	7004	0	2191	8398	0	2376	9189	0	2451	10506	0	2598
1.5+1.5 +1.5+2.5	16	3384	0	1769	5358	0	1816	6108	0	1894	6608	0	1945	8046	0	2177	9503	0	2206	10368	0	2266	11966	0	2378
	18	3337	0	1793	5311	0	1840	6050	0	1934	6542	0	1996	7962	0	2232	9456	0	2318	10331	0	2366	11919	0	2490
	20	3290	0	1816	5264	0	1864	5997	0	1965	6486	0	2032	7896	0	2271	9400	0	2390	10105	0	2474	11844	0	2605
	22	3243	0	1840	5217	0	1888	5922	0	2006	6392	0	2084	7811	0	2325	9344	0	2486	10218	0	2564	11788	0	2713
	24	3196	0	1864	5170	0	1912	5869	0	2045	6336	0	2134	7746	0	2380	9287	0	2581	10161	0	2662	11618	0	2823
1.5+1.5 +1.5+3.5	16	3700	0	1957	5800	0	2008	6698	0	2161	7230	0	2216	8860	0	2523	10410	0	2554	11330	0	2617	13030	0	2737
	18	3650	0	1983	5750	0	2034	6636	0	2203	7160	0	2269	8770	0	2582	10360	0	2674	11290	0	2725	12980	0	2857
	20	3600	0	2008	5700	0	2059	6580	0	2236	7100	0	2308	8700	0	2623	10300	0	2750	11050	0	2839	12900	0	2980
	22	3550	0	2034	5650	0	2085	6500	0	2280	7000	0	2364	8610	0	2681	10240	0	2852	11170	0	2936	12840	0	3094
	24	3500	0	2059	5600	0	2110	6444	0	2322	6940	0	2417	8540	0	2740	10180	0	2954	11110	0	3041	12660	0	3212

	INDOOR	OUTDOOR TEMPERATURE (°CDB)																							
	EDB	-15			-10			-7			-5			0			7			10			15		
	°C	TC	SHC	PI	TC	SHC	PI	TC	SHC	PI	TC	SHC	PI	TC	SHC	PI	TC	SHC	PI	TC	SHC	PI	TC	SHC	PI
1.5+1.5 +1.5+4.2	16	4000	0	1987	6100	0	2038	7198	0	2221	7730	0	2276	9560	0	2623	11110	0	2654	12030	0	2717	13730	0	2837
	18	3950	0	2013	6050	0	2064	7136	0	2263	7660	0	2329	9470	0	2682	11060	0	2774	11990	0	2825	13680	0	2957
	20	3900	0	2038	6000	0	2089	7080	0	2296	7600	0	2368	9400	0	2723	11000	0	2850	11750	0	2939	13600	0	3080
	22	3850	0	2064	5950	0	2115	7000	0	2340	7500	0	2424	9310	0	2781	10940	0	2952	11870	0	3036	13540	0	3194
	24	3800	0	2089	5900	0	2140	6944	0	2382	7440	0	2477	9240	0	2840	10880	0	3054	11810	0	3141	13360	0	3312
1.5+1.5 +1.5+5.0	16	4300	0	2269	6400	0	1306	7798	0	2500	8330	0	2562	10560	0	2933	12110	0	2967	13030	0	3040	14730	0	3176
	18	4250	0	2278	6350	0	2335	7736	0	2548	8260	0	2623	10470	0	2999	12060	0	3103	12990	0	3161	14680	0	3311
	20	4200	0	2306	6300	0	2364	7680	0	2586	8200	0	2667	10400	0	3046	12000	0	3190	12750	0	3291	14600	0	3450
	22	4150	0	2335	6250	0	2123	7600	0	2635	8100	0	2730	10310	0	3112	11940	0	3306	12870	0	3401	14540	0	3580
	24	4100	0	2364	6200	0	2152	7544	0	2683	8040	0	2791	10240	0	3178	11880	0	3421	12810	0	3519	14360	0	3713
1.5+1.5 +1.5+6.0	16	4300	0	2269	6400	0	1306	7798	0	2500	8330	0	2562	10560	0	2933	12110	0	2967	13030	0	3040	14730	0	3176
	18	4250	0	2278	6350	0	2335	7736	0	2548	8260	0	2623	10470	0	2999	12060	0	3103	12990	0	3161	14680	0	3311
	20	4200	0	2306	6300	0	2364	7680	0	2586	8200	0	2667	10400	0	3046	12000	0	3190	12750	0	3291	14600	0	3450
	22	4150	0	2335	6250	0	2123	7600	0	2635	8100	0	2730	10310	0	3112	11940	0	3306	12870	0	3401	14540	0	3580
	24	4100	0	2364	6200	0	2152	7544	0	2683	8040	0	2791	10240	0	3178	11880	0	3421	12810	0	3519	14360	0	3713
1.5+1.5 +1.8+1.8	16	3240	0	1761	5130	0	1809	5848	0	1886	6327	0	1937	7704	0	2168	9099	0	2197	9927	0	2256	11457	0	2368
	18	3195	0	1785	5085	0	1833	5792	0	1925	6264	0	1987	7623	0	2223	9054	0	2309	9891	0	2356	11412	0	2480
	20	3150	0	1809	5040	0	1856	5742	0	1956	6210	0	2023	7560	0	2261	9000	0	2380	9675	0	2463	11340	0	2594
	22	3105	0	1833	4995	0	1880	5670	0	1997	6120	0	2075	7479	0	2316	8946	0	2475	9783	0	2554	11286	0	2701
	24	3060	0	1856	4950	0	1904	5620	0	2037	6066	0	2125	7416	0	2370	8892	0	2570	9729	0	2651	11124	0	2811
1.5+1.5 +1.8+2.5	16	3564	0	1872	5643	0	1923	6433	0	2005	6960	0	2059	8474	0	2305	10009	0	2335	10920	0	2398	12603	0	2517
	18	3515	0	1898	5594	0	1948	6372	0	2047	6890	0	2113	8385	0	2363	9959	0	2454	10880	0	2505	12553	0	2636
	20	3465	0	1923	5544	0	1973	6316	0	2080	6831	0	2151	8316	0	2404	9900	0	2530	10643	0	2619	12474	0	2758
	22	3416	0	1948	5495	0	1999	6237	0	2123	6732	0	2206	8227	0	2462	9841	0	2631	10761	0	2715	12415	0	2872
	24	3366	0	1973	5445	0	2024	6182	0	2165	6673	0	2259	8158	0	2520	9781	0	2732	10702	0	2818	12236	0	2988
1.5+1.5 +1.8+3.5	16	3900	0	1905	6000	0	1955	6998	0	2105	7530	0	2159	9360	0	2459	10910	0	2489	11830	0	2551	13530	0	2668
	18	3850	0	1930	5950	0	1980	6936	0	2146	7460	0	2211	9270	0	2516	10860	0	2606	11790	0	2655	13480	0	2784
	20	3800	0	1955	5900	0	2004	6880	0	2179	7400	0	2248	9200	0	2556	10800	0	2680	11550	0	2767	13400	0	2903
	22	3750	0	1980	5850	0	2029	6800	0	2221	7300	0	2303	9110	0	2613	10740	0	2779	11670	0	2861	13340	0	3015
	24	3700	0	2004	5800	0	2054	6744	0	2262	7240	0	2355	9040	0	2670	10680	0	2878	11610	0	2963	13160	0	3129
1.5+1.5 +1.8+4.2	16	4200	0	1935	6300	0	1985	7798	0	2165	8330	0	2219	10260	0	2559	11810	0	2589	12730	0	2651	14430	0	2768
	18	4150	0	1960	6250	0	2010	7736	0	2206	8260	0	2271	10170	0	2616	11760	0	2706	12690	0	2755	14380	0	2884
	20	4100	0	1985	6200	0	2034	7680	0	2239	8200	0	2308	10100	0	2656	11700	0	2780	12450	0	2867	14300	0	3003
	22	4050	0	2010	6150	0	2059	7600	0	2281	8100	0	2363	10010	0	2713	11640	0	2879	12570	0	2961	14240	0	3115
	24	4000	0	2034	6100	0	2084	7544	0	2322	8040	0	2415	9940	0	2770	11580	0	2978	12510	0	3063	14060	0	3229
1.5+1.5 +1.8+5.0	16	4300	0	2279	6400	0	1336	7798	0	2560	8330	0	2622	10560	0	3033	12110	0	3067	13030	0	3140	14730	0	3276
	18	4250	0	2308	6350	0	2365	7736	0	2608	8260	0	2683	10470	0	3099	12060	0	3203	12990	0	3261	14680	0	3411
	20	4200	0	2336	6300	0	2394	7680	0	2646	8200	0	2727	10400	0	3146	12000	0	3290	12750	0	3391	14600	0	3550
	22	4150	0	2365	6250	0	2423	7600	0	2695	8100	0	2790	10310	0	3212	11940	0	3406	12870	0	3501	14540	0	3680
	24	4100	0	2394	6200	0	2452	7544	0	2743	8040	0	2851	10240	0	3278	11880	0	3521	12810	0	3619	14360	0	3813

	INDOOR	OUTDOOR TEMPERATURE (°CDB)																							
	EDB	-15			-10			-7			-5			0			7			10			15		
	°C	TC	SHC	PI	TC	SHC	PI	TC	SHC	PI	TC	SHC	PI	TC	SHC	PI	TC	SHC	PI	TC	SHC	PI	TC	SHC	PI
1.5+1.5 +1.8+6.0	16	4300	0	2279	6400	0	1336	7798	0	2560	8330	0	2622	10560	0	3033	12110	0	3067	13030	0	3140	14730	0	3276
	18	4250	0	2308	6350	0	2365	7736	0	2608	8260	0	2683	10470	0	3099	12060	0	3203	12990	0	3261	14680	0	3411
	20	4200	0	2336	6300	0	2394	7680	0	2646	8200	0	2727	10400	0	3146	12000	0	3290	12750	0	3391	14600	0	3550
	22	4150	0	2365	6250	0	2423	7600	0	2695	8100	0	2790	10310	0	3212	11940	0	3406	12870	0	3501	14540	0	3680
	24	4100	0	2394	6200	0	2452	7544	0	2743	8040	0	2851	10240	0	3278	11880	0	3521	12810	0	3619	14360	0	3813
1.5+1.5 +2.5+2.5	16	3900	0	1835	6000	0	1885	6998	0	1965	7530	0	2019	9360	0	2259	10910	0	2289	11830	0	2351	13530	0	2468
	18	3850	0	1860	5950	0	1910	6936	0	2006	7460	0	2071	9270	0	2316	10860	0	2406	11790	0	2455	13480	0	2584
	20	3800	0	1885	5900	0	1934	6880	0	2039	7400	0	2108	9200	0	2356	10800	0	2480	11550	0	2567	13400	0	2703
	22	3750	0	1910	5850	0	1959	6800	0	2081	7300	0	2163	9110	0	2413	10740	0	2579	11670	0	2661	13340	0	2815
	24	3700	0	1934	5800	0	1984	6744	0	2122	7240	0	2215	9040	0	2470	10680	0	2678	11610	0	2763	13160	0	2929
1.5+1.5 +2.5+3.5	16	4200	0	2139	6300	0	2196	7798	0	2290	8330	0	2352	10260	0	2633	11810	0	2667	12730	0	2740	14430	0	2876
	18	4150	0	2168	6250	0	2225	7736	0	2338	8260	0	2413	10170	0	2699	11760	0	2803	12690	0	2861	14380	0	3011
	20	4100	0	2196	6200	0	2254	7680	0	2376	8200	0	2457	10100	0	2746	11700	0	2890	12450	0	2991	14300	0	3150
	22	4050	0	2225	6150	0	2283	7600	0	2425	8100	0	2520	10010	0	2812	11640	0	3006	12570	0	3101	14240	0	3280
	24	4000	0	2254	6100	0	2312	7544	0	2473	8040	0	2581	9940	0	2878	11580	0	3121	12510	0	3219	14060	0	3413
1.5+1.5 +2.5+4.2	16	4200	0	2139	6300	0	2196	7798	0	2290	8330	0	2352	10560	0	2633	12110	0	2667	13030	0	2740	14730	0	2876
	18	4150	0	2168	6250	0	2225	7736	0	2338	8260	0	2413	10470	0	2699	12060	0	2803	12990	0	2861	14680	0	3011
	20	4100	0	2196	6200	0	2254	7680	0	2376	8200	0	2457	10400	0	2746	12000	0	2890	12750	0	2991	14600	0	3150
	22	4050	0	2225	6150	0	2283	7600	0	2425	8100	0	2520	10310	0	2812	11940	0	3006	12870	0	3101	14540	0	3280
	24	4000	0	2254	6100	0	2312	7544	0	2473	8040	0	2581	10240	0	2878	11880	0	3121	12810	0	3219	14360	0	3413
1.5+1.5 +2.5+5.0	16	4300	0	2279	6400	0	1336	7798	0	2560	8330	0	2622	10560	0	3033	12110	0	3067	13030	0	3140	14730	0	3276
	18	4250	0	2308	6350	0	2365	7736	0	2608	8260	0	2683	10470	0	3099	12060	0	3203	12990	0	3261	14680	0	3411
	20	4200	0	2336	6300	0	2394	7680	0	2646	8200	0	2727	10400	0	3146	12000	0	3290	12750	0	3391	14600	0	3550
	22	4150	0	2365	6250	0	2423	7600	0	2695	8100	0	2790	10310	0	3212	11940	0	3406	12870	0	3501	14540	0	3680
	24	4100	0	2394	6200	0	2452	7544	0	2743	8040	0	2851	10240	0	3278	11880	0	3521	12810	0	3619	14360	0	3813
1.5+1.5 +2.5+6.0	16	4300	0	2279	6400	0	1336	7798	0	2560	8330	0	2622	10560	0	3033	12110	0	3067	13030	0	3140	14730	0	3276
	18	4250	0	2308	6350	0	2365	7736	0	2608	8260	0	2683	10470	0	3099	12060	0	3203	12990	0	3261	14680	0	3411
	20	4200	0	2336	6300	0	2394	7680	0	2646	8200	0	2727	10400	0	3146	12000	0	3290	12750	0	3391	14600	0	3550
	22	4150	0	2365	6250	0	2423	7600	0	2695	8100	0	2790	10310	0	3212	11940	0	3406	12870	0	3501	14540	0	3680
	24	4100	0	2394	6200	0	2452	7544	0	2743	8040	0	2851	10240	0	3278	11880	0	3521	12810	0	3619	14360	0	3813
1.5+1.5 +3.5+3.5	16	4300	0	2209	6400	0	1246	7798	0	2360	8330	0	2422	10560	0	2733	12110	0	2767	13030	0	2840	14730	0	2976
	18	4250	0	2218	6350	0	2275	7736	0	2408	8260	0	2483	10470	0	2799	12060	0	2903	12990	0	2961	14680	0	3111
	20	4200	0	2246	6300	0	2304	7680	0	2446	8200	0	2517	10400	0	2846	12000	0	2990	12750	0	3091	14600	0	3250
	22	4150	0	2275	6250	0	2063	7600	0	2495	8100	0	2690	10310	0	2912	11940	0	3106	12870	0	3201	14540	0	3380
	24	4100	0	2304	6200	0	2092	7544	0	2543	8040	0	2651	10240	0	2978	11880	0	3221	12810	0	3319	14360	0	3513
1.5+1.5 +3.5+4.2	16	4300	0	2269	6400	0	1306	7798	0	2500	8330	0	2562	10560	0	2933	12110	0	2967	13030	0	3040	14730	0	3176
	18	4250	0	2278	6350	0	2335	7736	0	2548	8260	0	2623	10470	0	2999	12060	0	3103	12990	0	3161	14680	0	3311
	20	4200	0	2306	6300	0	2364	7680	0	2586	8200	0	2667	10400	0	3046	12000	0	3190	12750	0	3291	14600	0	3450
	22	4150	0	2335	6250	0	2123	7600	0	2635	8100	0	2730	10310	0	3112	11940	0	3306	12870	0	3401	14540	0	3580
	24	4100	0	2364	6200	0	2152	7544	0	2683	8040	0	2791	10240	0	3178	11880	0	3421	12810	0	3519	14360	0	3713

	INDOOR	OUTDOOR TEMPERATURE (°CDB)																							
	EDB	-15			-10			-7			-5			0			7			10			15		
	°C	TC	SHC	PI	TC	SHC	PI	TC	SHC	PI	TC	SHC	PI	TC	SHC	PI	TC	SHC	PI	TC	SHC	PI	TC	SHC	PI
1.5+1.5 +3.5+5.0	16	4300	0	2339	6400	0	1393	7798	0	2620	8330	0	2682	10560	0	3133	12110	0	3167	13030	0	3240	14730	0	3376
	18	4250	0	2368	6350	0	2425	7736	0	2668	8260	0	2743	10470	0	3199	12060	0	3303	12990	0	3361	14680	0	3511
	20	4200	0	2396	6300	0	2454	7680	0	2726	8200	0	2787	10400	0	3246	12000	0	3390	12750	0	3491	14600	0	3650
	22	4150	0	2425	6250	0	2486	7600	0	2755	8100	0	2850	10310	0	3312	11940	0	3506	12870	0	3601	14540	0	3780
	24	4100	0	2454	6200	0	2512	7544	0	2803	8040	0	2911	10240	0	3378	11880	0	3621	12810	0	3719	14360	0	3913
1.5+1.5 +3.5+6.0	16	4300	0	2339	6400	0	1393	7798	0	2620	8330	0	2682	10560	0	3133	12110	0	3167	13030	0	3240	14730	0	3376
	18	4250	0	2368	6350	0	2425	7736	0	2668	8260	0	2743	10470	0	3199	12060	0	3303	12990	0	3361	14680	0	3511
	20	4200	0	2396	6300	0	2454	7680	0	2726	8200	0	2787	10400	0	3246	12000	0	3390	12750	0	3491	14600	0	3650
	22	4150	0	2425	6250	0	2486	7600	0	2755	8100	0	2850	10310	0	3312	11940	0	3506	12870	0	3601	14540	0	3780
	24	4100	0	2454	6200	0	2512	7544	0	2803	8040	0	2911	10240	0	3378	11880	0	3621	12810	0	3719	14360	0	3913
1.5+1.5 +4.2+4.2	16	4300	0	2279	6400	0	1336	7798	0	2560	8330	0	2622	10560	0	3033	12110	0	3067	13030	0	3140	14730	0	3276
	18	4250	0	2308	6350	0	2365	7736	0	2608	8260	0	2683	10470	0	3099	12060	0	3203	12990	0	3261	14680	0	3411
	20	4200	0	2336	6300	0	2394	7680	0	2646	8200	0	2727	10400	0	3146	12000	0	3290	12750	0	3391	14600	0	3550
	22	4150	0	2365	6250	0	2423	7600	0	2695	8100	0	2790	10310	0	3212	11940	0	3406	12870	0	3501	14540	0	3680
	24	4100	0	2394	6200	0	2452	7544	0	2743	8040	0	2851	10240	0	3278	11880	0	3521	12810	0	3619	14360	0	3813
1.5+1.5 +4.2+5.0	16	4300	0	2369	6400	0	1406	7798	0	2700	8330	0	2762	10560	0	3233	12110	0	3267	13030	0	3340	14730	0	3476
	18	4250	0	2378	6350	0	2435	7736	0	2746	8260	0	2823	10470	0	3299	12060	0	3403	12990	0	3461	14680	0	3611
	20	4200	0	2406	6300	0	2464	7680	0	2786	8200	0	2867	10400	0	3346	12000	0	3490	12750	0	3591	14600	0	3750
	22	4150	0	2435	6250	0	2223	7600	0	2835	8100	0	2930	10310	0	3412	11940	0	3606	12870	0	3701	14540	0	3880
	24	4100	0	2464	6200	0	2252	7544	0	2883	8040	0	2991	10240	0	3478	11880	0	3721	12810	0	3819	14360	0	4013
1.5+1.5 +4.2+6.0	16	4300	0	2369	6400	0	1406	7798	0	2700	8330	0	2762	10560	0	3233	12110	0	3267	13030	0	3340	14730	0	3476
	18	4250	0	2378	6350	0	2435	7736	0	2746	8260	0	2823	10470	0	3299	12060	0	3403	12990	0	3461	14680	0	3611
	20	4200	0	2406	6300	0	2464	7680	0	2786	8200	0	2867	10400	0	3346	12000	0	3490	12750	0	3591	14600	0	3750
	22	4150	0	2435	6250	0	2223	7600	0	2835	8100	0	2930	10310	0	3412	11940	0	3606	12870	0	3701	14540	0	3880
	24	4100	0	2464	6200	0	2252	7544	0	2883	8040	0	2991	10240	0	3478	11880	0	3721	12810	0	3819	14360	0	4013
1.5+1.5 +5.0+5.0	16	4300	0	2369	6400	0	1406	7798	0	2700	8330	0	2762	10560	0	3233	12110	0	3267	13030	0	3340	14730	0	3476
	18	4250	0	2378	6350	0	2435	7736	0	2746	8260	0	2823	10470	0	3299	12060	0	3403	12990	0	3461	14680	0	3611
	20	4200	0	2406	6300	0	2464	7680	0	2786	8200	0	2867	10400	0	3346	12000	0	3490	12750	0	3591	14600	0	3750
	22	4150	0	2435	6250	0	2223	7600	0	2835	8100	0	2930	10310	0	3412	11940	0	3606	12870	0	3701	14540	0	3880
	24	4100	0	2464	6200	0	2252	7544	0	2883	8040	0	2991	10240	0	3478	11880	0	3721	12810	0	3819	14360	0	4013
1.5+1.5 +5.0+6.0	16	4300	0	2369	6400	0	1406	7798	0	2700	8330	0	2762	10560	0	3233	12110	0	3267	13030	0	3340	14730	0	3476
	18	4250	0	2378	6350	0	2435	7736	0	2746	8260	0	2823	10470	0	3299	12060	0	3403	12990	0	3461	14680	0	3611
	20	4200	0	2406	6300	0	2464	7680	0	2786	8200	0	2867	10400	0	3346	12000	0	3490	12750	0	3591	14600	0	3750
	22	4150	0	2435	6250	0	2223	7600	0	2835	8100	0	2930	10310	0	3412	11940	0	3606	12870	0	3701	14540	0	3880
	24	4100	0	2464	6200	0	2252	7544	0	2883	8040	0	2991	10240	0	3478	11880	0	3721	12810	0	3819	14360	0	4013
1.5+1.5 +6.0+6.0	16	4300	0	2369	6400	0	1406	7798	0	2700	8330	0	2762	10560	0	3233	12110	0	3267	13030	0	3340	14730	0	3476
	18	4250	0	2378	6350	0	2435	7736	0	2746	8260	0	2823	10470	0	3299	12060	0	3403	12990	0	3461	14680	0	3611
	20	4200	0	2406	6300	0	2464	7680	0	2786	8200	0	2867	10400	0	3346	12000	0	3490	12750	0	3591	14600	0	3750
	22	4150	0	2435	6250	0	2223	7600	0	2835	8100	0	2930	10310	0	3412	11940	0	3606	12870	0	3701	14540	0	3880
	24	4100	0	2464	6200	0	2252	7544	0	2883	8040	0	2991	10240	0	3478	11880	0	3721	12810	0	3819	14360	0	4013

	INDOOR	OUTDOOR TEMPERATURE (°CDB)																							
	EDB	-15			-10			-7			-5			0			7			10			15		
	°C	TC	SHC	PI	TC	SHC	PI	TC	SHC	PI	TC	SHC	PI	TC	SHC	PI	TC	SHC	PI	TC	SHC	PI	TC	SHC	PI
1.5+1.8 +1.8+1.8	16	3420	0	2035	5415	0	2090	6173	0	2179	6679	0	2239	8132	0	2505	9605	0	2538	10479	0	2607	12094	0	2736
	18	3373	0	2063	5368	0	2118	6114	0	2225	6612	0	2296	8047	0	2569	9557	0	2668	10441	0	2723	12046	0	2866
	20	3325	0	2090	5320	0	2145	6061	0	2261	6555	0	2338	7980	0	2613	9500	0	2750	10213	0	2846	11970	0	2998
	22	3278	0	2118	5273	0	2173	5985	0	2308	6460	0	2398	7895	0	2676	9443	0	2860	10327	0	2951	11913	0	3121
	24	3230	0	2145	5225	0	2200	5932	0	2353	6403	0	2456	7828	0	2739	9386	0	2970	10270	0	3064	11742	0	3248
1.5+1.8 +1.8+2.5	16	3600	0	2035	5700	0	2090	6498	0	2179	7030	0	2239	8560	0	2505	10110	0	2538	11030	0	2607	12730	0	2736
	18	3550	0	2063	5650	0	2118	6436	0	2225	6960	0	2296	8470	0	2569	10060	0	2668	10990	0	2723	12680	0	2866
	20	3500	0	2090	5600	0	2145	6380	0	2261	6900	0	2338	8400	0	2613	10400	0	2750	10750	0	2846	12600	0	2998
	22	3450	0	2118	5550	0	2173	6300	0	2308	6800	0	2398	8310	0	2676	9940	0	2860	10870	0	2951	12540	0	3121
	24	3400	0	2145	5500	0	2200	6244	0	2353	6740	0	2456	8240	0	2739	9880	0	2970	10810	0	3064	12360	0	3248
1.5+1.8 +1.8+3.5	16	4000	0	2035	6100	0	2090	7298	0	2179	7830	0	2239	9860	0	2505	11410	0	2538	12330	0	2607	14030	0	2736
	18	3950	0	2063	6050	0	2118	7236	0	2225	7760	0	2296	9770	0	2569	11360	0	2668	12290	0	2723	13980	0	2866
	20	3900	0	2090	6000	0	2145	7180	0	2261	7700	0	2338	9700	0	2613	11300	0	2750	12050	0	2846	13900	0	2998
	22	3850	0	2118	5950	0	2173	7100	0	2308	7600	0	2398	9610	0	2676	11240	0	2860	12170	0	2951	13840	0	3121
	24	3800	0	2145	5900	0	2200	7044	0	2353	7540	0	2456	9540	0	2739	11180	0	2970	12110	0	3064	13660	0	3248
1.5+1.8 +1.8+4.2	16	4200	0	2139	6300	0	2196	7798	0	2290	8330	0	2352	10560	0	2633	12110	0	2667	13030	0	2740	14730	0	2876
	18	4150	0	2168	6250	0	2225	7736	0	2338	8260	0	2413	10470	0	2699	12060	0	2803	12990	0	2861	14680	0	3011
	20	4100	0	2196	6200	0	2254	7680	0	2376	8200	0	2457	10400	0	2746	12000	0	2890	12750	0	2991	14600	0	3150
	22	4050	0	2225	6150	0	2283	7600	0	2425	8100	0	2520	10310	0	2812	11940	0	3006	12870	0	3101	14540	0	3280
	24	4000	0	2254	6100	0	2312	7544	0	2473	8040	0	2581	10240	0	2878	11880	0	3121	12810	0	3219	14360	0	3413
1.5+1.8 +1.8+5.0	16	4300	0	2339	6400	0	1393	7798	0	2620	8330	0	2682	10560	0	3133	12110	0	3167	13030	0	3240	14730	0	3376
	18	4250	0	2368	6350	0	2425	7736	0	2668	8260	0	2743	10470	0	3199	12060	0	3303	12990	0	3361	14680	0	3511
	20	4200	0	2396	6300	0	2454	7680	0	2726	8200	0	2787	10400	0	3246	12000	0	3390	12750	0	3491	14600	0	3650
	22	4150	0	2425	6250	0	2486	7600	0	2755	8100	0	2850	10310	0	3312	11940	0	3506	12870	0	3601	14540	0	3780
	24	4100	0	2454	6200	0	2512	7544	0	2803	8040	0	2911	10240	0	3378	11880	0	3621	12810	0	3719	14360	0	3913
1.5+1.8 +1.8+6.0	16	4300	0	2339	6400	0	1393	7798	0	2620	8330	0	2682	10560	0	3133	12110	0	3167	13030	0	3240	14730	0	3376
	18	4250	0	2368	6350	0	2425	7736	0	2668	8260	0	2743	10470	0	3199	12060	0	3303	12990	0	3361	14680	0	3511
	20	4200	0	2396	6300	0	2454	7680	0	2726	8200	0	2787	10400	0	3246	12000	0	3390	12750	0	3491	14600	0	3650
	22	4150	0	2425	6250	0	2486	7600	0	2755	8100	0	2850	10310	0	3312	11940	0	3506	12870	0	3601	14540	0	3780
	24	4100	0	2454	6200	0	2512	7544	0	2803	8040	0	2911	10240	0	3378	11880	0	3621	12810	0	3719	14360	0	3913
1.5+1.8 +2.5+2.5	16	4000	0	2139	6100	0	2196	7298	0	2290	7830	0	2352	9860	0	2633	11410	0	2667	12330	0	2740	14030	0	2876
	18	3950	0	2168	6050	0	2225	7236	0	2338	7760	0	2413	9770	0	2699	11360	0	2803	12290	0	2861	13980	0	3011
	20	3900	0	2196	6000	0	2254	7180	0	2376	7700	0	2457	9700	0	2746	11300	0	2890	12050	0	2991	13900	0	3150
	22	3850	0	2225	5950	0	2283	7100	0	2425	7600	0	2520	9610	0	2812	11240	0	3006	12170	0	3101	13840	0	3280
	24	3800	0	2254	5900	0	2312	7044	0	2473	7540	0	2581	9540	0	2878	11180	0	3121	12110	0	3219	13660	0	3413
1.5+1.8 +2.5+3.5	16	4300	0	2209	6400	0	1246	7798	0	2360	8330	0	2422	10560	0	2733	12110	0	2767	13030	0	2840	14730	0	2976
	18	4250	0	2218	6350	0	2275	7736	0	2408	8260	0	2483	10470	0	2799	12060	0	2903	12990	0	2961	14680	0	3111
	20	4200	0	2246	6300	0	2304	7680	0	2446	8200	0	2517	10400	0	2846	12000	0	2990	12750	0	3091	14600	0	3250
	22	4150	0	2275	6250	0	2063	7600	0	2495	8100	0	2690	10310	0	2912	11940	0	3106	12870	0	3201	14540	0	3380
	24	4100	0	2304	6200	0	2092	7544	0	2543	8040	0	2651	10240	0	2978	11880	0	3221	12810	0	3319	14360	0	3513

	INDOOR	OUTDOOR TEMPERATURE (°CDB)																							
	EDB	-15			-10			-7			-5			0			7			10			15		
	°C	TC	SHC	PI	TC	SHC	PI	TC	SHC	PI	TC	SHC	PI	TC	SHC	PI	TC	SHC	PI	TC	SHC	PI	TC	SHC	PI
1.5+1.8 +2.5+4.2	16	4300	0	2269	6400	0	1306	7798	0	2500	8330	0	2562	10560	0	2933	12110	0	2967	13030	0	3040	14730	0	3176
	18	4250	0	2278	6350	0	2335	7736	0	2548	8260	0	2623	10470	0	2999	12060	0	3103	12990	0	3161	14680	0	3311
	20	4200	0	2306	6300	0	2364	7680	0	2586	8200	0	2667	10400	0	3046	12000	0	3190	12750	0	3291	14600	0	3450
	22	4150	0	2335	6250	0	2123	7600	0	2635	8100	0	2730	10310	0	3112	11940	0	3306	12870	0	3401	14540	0	3580
	24	4100	0	2364	6200	0	2152	7544	0	2683	8040	0	2791	10240	0	3178	11880	0	3421	12810	0	3519	14360	0	3713
1.5+1.8 +2.5+5.0	16	4300	0	2369	6400	0	1406	7798	0	2700	8330	0	2762	10560	0	3233	12110	0	3267	13030	0	3340	14730	0	3476
	18	4250	0	2378	6350	0	2435	7736	0	2746	8260	0	2823	10470	0	3299	12060	0	3403	12990	0	3461	14680	0	3611
	20	4200	0	2406	6300	0	2464	7680	0	2786	8200	0	2867	10400	0	3346	12000	0	3490	12750	0	3591	14600	0	3750
	22	4150	0	2435	6250	0	2223	7600	0	2835	8100	0	2930	10310	0	3412	11940	0	3606	12870	0	3701	14540	0	3880
	24	4100	0	2464	6200	0	2252	7544	0	2883	8040	0	2991	10240	0	3478	11880	0	3721	12810	0	3819	14360	0	4013
1.5+1.8 +2.5+6.0	16	4300	0	2369	6400	0	1406	7798	0	2700	8330	0	2762	10560	0	3233	12110	0	3267	13030	0	3340	14730	0	3476
	18	4250	0	2378	6350	0	2435	7736	0	2746	8260	0	2823	10470	0	3299	12060	0	3403	12990	0	3461	14680	0	3611
	20	4200	0	2406	6300	0	2464	7680	0	2786	8200	0	2867	10400	0	3346	12000	0	3490	12750	0	3591	14600	0	3750
	22	4150	0	2435	6250	0	2223	7600	0	2835	8100	0	2930	10310	0	3412	11940	0	3606	12870	0	3701	14540	0	3880
	24	4100	0	2464	6200	0	2252	7544	0	2883	8040	0	2991	10240	0	3478	11880	0	3721	12810	0	3819	14360	0	4013
1.5+1.8 +3.5+3.5	16	4300	0	2269	6400	0	1306	7798	0	2500	8330	0	2562	10560	0	2933	12110	0	2967	13030	0	3040	14730	0	3176
	18	4250	0	2278	6350	0	2335	7736	0	2548	8260	0	2623	10470	0	2999	12060	0	3103	12990	0	3161	14680	0	3311
	20	4200	0	2306	6300	0	2364	7680	0	2586	8200	0	2667	10400	0	3046	12000	0	3190	12750	0	3291	14600	0	3450
	22	4150	0	2335	6250	0	2123	7600	0	2635	8100	0	2730	10310	0	3112	11940	0	3306	12870	0	3401	14540	0	3580
	24	4100	0	2364	6200	0	2152	7544	0	2683	8040	0	2791	10240	0	3178	11880	0	3421	12810	0	3519	14360	0	3713
1.5+1.8 +3.5+4.2	16	4300	0	2279	6400	0	1336	7798	0	2560	8330	0	2622	10560	0	3033	12110	0	3067	13030	0	3140	14730	0	3276
	18	4250	0	2308	6350	0	2365	7736	0	2608	8260	0	2683	10470	0	3099	12060	0	3203	12990	0	3261	14680	0	3411
	20	4200	0	2336	6300	0	2394	7680	0	2646	8200	0	2727	10400	0	3146	12000	0	3290	12750	0	3391	14600	0	3550
	22	4150	0	2365	6250	0	2423	7600	0	2695	8100	0	2790	10310	0	3212	11940	0	3406	12870	0	3501	14540	0	3680
	24	4100	0	2394	6200	0	2452	7544	0	2743	8040	0	2851	10240	0	3278	11880	0	3521	12810	0	3619	14360	0	3813
1.5+1.8 +3.5+5.0	16	4300	0	2389	6400	0	1426	7798	0	2740	8330	0	2802	10560	0	3303	12110	0	3337	13030	0	3410	14730	0	3546
	18	4250	0	2398	6350	0	2455	7736	0	2786	8260	0	2863	10470	0	3369	12060	0	3473	12990	0	3531	14680	0	3681
	20	4200	0	2426	6300	0	2484	7680	0	2826	8200	0	2907	10400	0	3416	12000	0	3560	12750	0	3661	14600	0	3820
	22	4150	0	2455	6250	0	2243	7600	0	2875	8100	0	2970	10310	0	3482	11940	0	3676	12870	0	3771	14540	0	3950
	24	4100	0	2484	6200	0	2272	7544	0	2923	8040	0	3031	10240	0	3548	11880	0	3791	12810	0	3879	14360	0	4083
1.5+1.8 +3.5+6.0	16	4300	0	2389	6400	0	1426	7798	0	2740	8330	0	2802	10560	0	3303	12110	0	3337	13030	0	3410	14730	0	3546
	18	4250	0	2398	6350	0	2455	7736	0	2786	8260	0	2863	10470	0	3369	12060	0	3473	12990	0	3531	14680	0	3681
	20	4200	0	2426	6300	0	2484	7680	0	2826	8200	0	2907	10400	0	3416	12000	0	3560	12750	0	3661	14600	0	3820
	22	4150	0	2455	6250	0	2243	7600	0	2875	8100	0	2970	10310	0	3482	11940	0	3676	12870	0	3771	14540	0	3950
	24	4100	0	2484	6200	0	2272	7544	0	2923	8040	0	3031	10240	0	3548	11880	0	3791	12810	0	3879	14360	0	4083
1.5+1.8 +4.2+4.2	16	4300	0	2302	6400	0	2358	7798	0	2679	8330	0	2739	10560	0	3241	12110	0	3274	13030	0	3344	14730	0	3476
	18	4250	0	2330	6350	0	2386	7736	0	2725	8260	0	2798	10470	0	3305	12060	0	3406	12990	0	3462	14680	0	3608
	20	4200	0	2358	6300	0	2414	7680	0	2762	8200	0	2840	10400	0	3350	12000	0	3490	12750	0	3588	14600	0	3742
	22	4150	0	2386	6250	0	2442	7600	0	2810	8100	0	2902	10310	0	3414	11940	0	3602	12870	0	3694	14540	0	3868
	24	4100	0	2414	6200	0	2470	7544	0	2856	8040	0	2960	10240	0	3479	11880	0	3714	12810	0	3809	14360	0	3997

	INDOOR	OUTDOOR TEMPERATURE (°CDB)																							
	EDB	-15			-10			-7			-5			0			7			10			15		
	°C	TC	SHC	PI	TC	SHC	PI	TC	SHC	PI	TC	SHC	PI	TC	SHC	PI	TC	SHC	PI	TC	SHC	PI	TC	SHC	PI
1.5+1.8 +4.2+5.0	16	4300	0	2332	6400	0	2388	7798	0	2739	8330	0	2799	10560	0	3341	12110	0	3374	13030	0	3444	14730	0	3576
	18	4250	0	2360	6350	0	2416	7736	0	2785	8260	0	2858	10470	0	3405	12060	0	3506	12990	0	3562	14680	0	3708
	20	4200	0	2388	6300	0	2444	7680	0	2822	8200	0	2900	10400	0	3450	12000	0	3590	12750	0	3688	14600	0	3842
	22	4150	0	2416	6250	0	2472	7600	0	2870	8100	0	2962	10310	0	3514	11940	0	3702	12870	0	3794	14540	0	3968
	24	4100	0	2171	6200	0	2500	7544	0	2916	8040	0	3020	10240	0	3579	11880	0	3814	12810	0	3909	14360	0	4097
1.5+1.8 +4.2+6.0	16	4300	0	2332	6400	0	2388	7798	0	2739	8330	0	2799	10560	0	3341	12110	0	3374	13030	0	3444	14730	0	3576
	18	4250	0	2360	6350	0	2416	7736	0	2785	8260	0	2858	10470	0	3405	12060	0	3506	12990	0	3562	14680	0	3708
	20	4200	0	2388	6300	0	2444	7680	0	2822	8200	0	2900	10400	0	3450	12000	0	3590	12750	0	3688	14600	0	3842
	22	4150	0	2416	6250	0	2472	7600	0	2870	8100	0	2962	10310	0	3514	11940	0	3702	12870	0	3794	14540	0	3968
	24	4100	0	2171	6200	0	2500	7544	0	2916	8040	0	3020	10240	0	3579	11880	0	3814	12810	0	3909	14360	0	4097
1.5+1.8 +5.0+5.0	16	4300	0	2332	6400	0	2388	7798	0	2739	8330	0	2799	10560	0	3341	12110	0	3374	13030	0	3444	14730	0	3576
	18	4250	0	2360	6350	0	2416	7736	0	2785	8260	0	2858	10470	0	3405	12060	0	3506	12990	0	3562	14680	0	3708
	20	4200	0	2388	6300	0	2444	7680	0	2822	8200	0	2900	10400	0	3450	12000	0	3590	12750	0	3688	14600	0	3842
	22	4150	0	2416	6250	0	2472	7600	0	2870	8100	0	2962	10310	0	3514	11940	0	3702	12870	0	3794	14540	0	3968
	24	4100	0	2171	6200	0	2500	7544	0	2916	8040	0	3020	10240	0	3579	11880	0	3814	12810	0	3909	14360	0	4097
1.5+1.8 +5.0+6.0	16	4300	0	2332	6400	0	2388	7798	0	2739	8330	0	2799	10560	0	3341	12110	0	3374	13030	0	3444	14730	0	3576
	18	4250	0	2360	6350	0	2416	7736	0	2785	8260	0	2858	10470	0	3405	12060	0	3506	12990	0	3562	14680	0	3708
	20	4200	0	2388	6300	0	2444	7680	0	2822	8200	0	2900	10400	0	3450	12000	0	3590	12750	0	3688	14600	0	3842
	22	4150	0	2416	6250	0	2472	7600	0	2870	8100	0	2962	10310	0	3514	11940	0	3702	12870	0	3794	14540	0	3968
	24	4100	0	2171	6200	0	2500	7544	0	2916	8040	0	3020	10240	0	3579	11880	0	3814	12810	0	3909	14360	0	4097
1.5+1.8 +6.0+6.0	16	4300	0	2332	6400	0	2388	7798	0	2739	8330	0	2799	10560	0	3341	12110	0	3374	13030	0	3444	14730	0	3576
	18	4250	0	2360	6350	0	2416	7736	0	2785	8260	0	2858	10470	0	3405	12060	0	3506	12990	0	3562	14680	0	3708
	20	4200	0	2388	6300	0	2444	7680	0	2822	8200	0	2900	10400	0	3450	12000	0	3590	12750	0	3688	14600	0	3842
	22	4150	0	2416	6250	0	2472	7600	0	2870	8100	0	2962	10310	0	3514	11940	0	3702	12870	0	3794	14540	0	3968
	24	4100	0	2171	6200	0	2500	7544	0	2916	8040	0	3020	10240	0	3579	11880	0	3814	12810	0	3909	14360	0	4097
1.5+2.5 +2.5+2.5	16	4300	0	2209	6400	0	1246	7798	0	2360	8330	0	2422	10560	0	2733	12110	0	2767	13030	0	2840	14730	0	2976
	18	4250	0	2218	6350	0	2275	7736	0	2408	8260	0	2483	10470	0	2799	12060	0	2903	12990	0	2961	14680	0	3111
	20	4200	0	2246	6300	0	2304	7680	0	2446	8200	0	2517	10400	0	2846	12000	0	2990	12750	0	3091	14600	0	3250
	22	4150	0	2275	6250	0	2063	7600	0	2495	8100	0	2690	10310	0	2912	11940	0	3106	12870	0	3201	14540	0	3380
	24	4100	0	2304	6200	0	2092	7544	0	2543	8040	0	2651	10240	0	2978	11880	0	3221	12810	0	3319	14360	0	3513
1.5+2.5 +2.5+3.5	16	4300	0	2269	6400	0	1306	7798	0	2500	8330	0	2562	10560	0	2933	12110	0	2967	13030	0	3040	14730	0	3176
	18	4250	0	2278	6350	0	2335	7736	0	2548	8260	0	2623	10470	0	2999	12060	0	3103	12990	0	3161	14680	0	3311
	20	4200	0	2306	6300	0	2364	7680	0	2586	8200	0	2667	10400	0	3046	12000	0	3190	12750	0	3291	14600	0	3450
	22	4150	0	2335	6250	0	2123	7600	0	2635	8100	0	2730	10310	0	3112	11940	0	3306	12870	0	3401	14540	0	3580
	24	4100	0	2364	6200	0	2152	7544	0	2683	8040	0	2791	10240	0	3178	11880	0	3421	12810	0	3519	14360	0	3713
1.5+2.5 +2.5+4.2	16	4300	0	2339	6400	0	1393	7798	0	2620	8330	0	2682	10560	0	3133	12110	0	3167	13030	0	3240	14730	0	3376
	18	4250	0	2368	6350	0	2425	7736	0	2668	8260	0	2743	10470	0	3199	12060	0	3303	12990	0	3361	14680	0	3511
	20	4200	0	2396	6300	0	2454	7680	0	2726	8200	0	2787	10400	0	3246	12000	0	3390	12750	0	3491	14600	0	3650
	22	4150	0	2425	6250	0	2486	7600	0	2755	8100	0	2850	10310	0	3312	11940	0	3506	12870	0	3601	14540	0	3780
	24	4100	0	2454	6200	0	2512	7544	0	2803	8040	0	2911	10240	0	3378	11880	0	3621	12810	0	3719	14360	0	3913

	INDOOR	OUTDOOR TEMPERATURE (°CDB)																							
	EDB	-15			-10			-7			-5			0			7			10			15		
	°C	TC	SHC	PI	TC	SHC	PI	TC	SHC	PI	TC	SHC	PI	TC	SHC	PI	TC	SHC	PI	TC	SHC	PI	TC	SHC	PI
1.5+2.5 +2.5+5.0	16	4300	0	2409	6400	0	1436	7798	0	2760	8330	0	2822	10560	0	3333	12110	0	3367	13030	0	3440	14730	0	3576
	18	4250	0	2408	6350	0	2465	7736	0	2806	8260	0	2883	10470	0	3399	12060	0	3503	12990	0	3571	14680	0	3711
	20	4200	0	2436	6300	0	2494	7680	0	2846	8200	0	2927	10400	0	3446	12000	0	3590	12750	0	3691	14600	0	3850
	22	4150	0	2465	6250	0	2253	7600	0	2895	8100	0	2990	10310	0	3512	11940	0	3706	12870	0	3801	14540	0	3980
	24	4100	0	2494	6200	0	2282	7544	0	2943	8040	0	3051	10240	0	3578	11880	0	3821	12810	0	3909	14360	0	4113
1.5+2.5 +2.5+6.0	16	4300	0	2409	6400	0	1436	7798	0	2760	8330	0	2822	10560	0	3333	12110	0	3367	13030	0	3440	14730	0	3576
	18	4250	0	2408	6350	0	2465	7736	0	2806	8260	0	2883	10470	0	3399	12060	0	3503	12990	0	3571	14680	0	3711
	20	4200	0	2436	6300	0	2494	7680	0	2846	8200	0	2927	10400	0	3446	12000	0	3590	12750	0	3691	14600	0	3850
	22	4150	0	2465	6250	0	2253	7600	0	2895	8100	0	2990	10310	0	3512	11940	0	3706	12870	0	3801	14540	0	3980
	24	4100	0	2494	6200	0	2282	7544	0	2943	8040	0	3051	10240	0	3578	11880	0	3821	12810	0	3909	14360	0	4113
1.5+2.5 +3.5+3.5	16	4300	0	2239	6400	0	1276	7798	0	2420	8330	0	2482	10560	0	2833	12110	0	2867	13030	0	2940	14730	0	3076
	18	4250	0	2248	6350	0	2305	7736	0	2468	8260	0	2543	10470	0	2899	12060	0	3003	12990	0	3061	14680	0	3211
	20	4200	0	2276	6300	0	2334	7680	0	2506	8200	0	2577	10400	0	2946	12000	0	3090	12750	0	3191	14600	0	3350
	22	4150	0	2305	6250	0	2093	7600	0	2555	8100	0	2750	10310	0	3012	11940	0	3206	12870	0	3301	14540	0	3480
	24	4100	0	2334	6200	0	2112	7544	0	2603	8040	0	2711	10240	0	3078	11880	0	3321	12810	0	3419	14360	0	3616
1.5+2.5 +3.5+4.2	16	4300	0	2269	6400	0	1306	7798	0	2500	8330	0	2562	10560	0	2933	12110	0	2967	13030	0	3040	14730	0	3176
	18	4250	0	2278	6350	0	2335	7736	0	2548	8260	0	2623	10470	0	2999	12060	0	3103	12990	0	3161	14680	0	3311
	20	4200	0	2306	6300	0	2364	7680	0	2586	8200	0	2667	10400	0	3046	12000	0	3190	12750	0	3291	14600	0	3450
	22	4150	0	2335	6250	0	2123	7600	0	2635	8100	0	2730	10310	0	3112	11940	0	3306	12870	0	3401	14540	0	3580
	24	4100	0	2364	6200	0	2152	7544	0	2683	8040	0	2791	10240	0	3178	11880	0	3421	12810	0	3519	14360	0	3713
1.5+2.5 +3.5+5.0	16	4300	0	2429	6400	0	1456	7798	0	2820	8330	0	2862	10560	0	3393	12110	0	3427	13030	0	3500	14730	0	3636
	18	4250	0	2428	6350	0	2485	7736	0	2866	8260	0	2923	10470	0	3459	12060	0	3563	12990	0	3631	14680	0	3771
	20	4200	0	2456	6300	0	2514	7680	0	2926	8200	0	2967	10400	0	3506	12000	0	3650	12750	0	3751	14600	0	3910
	22	4150	0	2485	6250	0	2273	7600	0	2955	8100	0	3050	10310	0	3572	11940	0	3766	12870	0	3861	14540	0	4040
	24	4100	0	2514	6200	0	2302	7544	0	3003	8040	0	3111	10240	0	3638	11880	0	3881	12810	0	3969	14360	0	4173
1.5+2.5 +3.5+6.0	16	4300	0	2429	6400	0	1456	7798	0	2820	8330	0	2862	10560	0	3393	12110	0	3427	13030	0	3500	14730	0	3636
	18	4250	0	2428	6350	0	2485	7736	0	2866	8260	0	2923	10470	0	3459	12060	0	3563	12990	0	3631	14680	0	3771
	20	4200	0	2456	6300	0	2514	7680	0	2926	8200	0	2967	10400	0	3506	12000	0	3650	12750	0	3751	14600	0	3910
	22	4150	0	2485	6250	0	2273	7600	0	2955	8100	0	3050	10310	0	3572	11940	0	3766	12870	0	3861	14540	0	4040
	24	4100	0	2514	6200	0	2302	7544	0	3003	8040	0	3111	10240	0	3638	11880	0	3881	12810	0	3969	14360	0	4173
1.5+2.5 +4.2+4.2	16	4300	0	2409	6400	0	1436	7798	0	2760	8330	0	2822	10560	0	3333	12110	0	3367	13030	0	3440	14730	0	3576
	18	4250	0	2408	6350	0	2465	7736	0	2806	8260	0	2883	10470	0	3399	12060	0	3503	12990	0	3571	14680	0	3711
	20	4200	0	2436	6300	0	2494	7680	0	2846	8200	0	2927	10400	0	3446	12000	0	3590	12750	0	3691	14600	0	3850
	22	4150	0	2465	6250	0	2253	7600	0	2895	8100	0	2990	10310	0	3512	11940	0	3706	12870	0	3801	14540	0	3980
	24	4100	0	2494	6200	0	2282	7544	0	2943	8040	0	3051	10240	0	3578	11880	0	3821	12810	0	3909	14360	0	4113
1.5+2.5 +4.2+5.0	16	4300	0	2429	6400	0	1456	7798	0	2820	8330	0	2862	10560	0	3393	12110	0	3427	13030	0	3500	14730	0	3636
	18	4250	0	2428	6350	0	2485	7736	0	2866	8260	0	2923	10470	0	3459	12060	0	3563	12990	0	3631	14680	0	3771
	20	4200	0	2456	6300	0	2514	7680	0	2926	8200	0	2967	10400	0	3506	12000	0	3650	12750	0	3751	14600	0	3910
	22	4150	0	2485	6250	0	2273	7600	0	2955	8100	0	3050	10310	0	3572	11940	0	3766	12870	0	3861	14540	0	4040
	24	4100	0	2514	6200	0	2302	7544	0	3003	8040	0	3111	10240	0	3638	11880	0	3881	12810	0	3969	14360	0	4173

	INDOOR	OUTDOOR TEMPERATURE (°CDB)																							
	EDB	-15			-10			-7			-5			0			7			10			15		
	°C	TC	SHC	PI	TC	SHC	PI	TC	SHC	PI	TC	SHC	PI	TC	SHC	PI	TC	SHC	PI	TC	SHC	PI	TC	SHC	PI
1.5+2.5 +4.2+6.0	16	4300	0	2429	6400	0	1456	7798	0	2820	8330	0	2862	10560	0	3393	12110	0	3427	13030	0	3500	14730	0	3636
	18	4250	0	2428	6350	0	2485	7736	0	2866	8260	0	2923	10470	0	3459	12060	0	3563	12990	0	3631	14680	0	3771
	20	4200	0	2456	6300	0	2514	7680	0	2926	8200	0	2967	10400	0	3506	12000	0	3650	12750	0	3751	14600	0	3910
	22	4150	0	2485	6250	0	2273	7600	0	2955	8100	0	3050	10310	0	3572	11940	0	3766	12870	0	3861	14540	0	4040
	24	4100	0	2514	6200	0	2302	7544	0	3003	8040	0	3111	10240	0	3638	11880	0	3881	12810	0	3969	14360	0	4173
1.5+2.5 +5.0+5.0	16	4300	0	2429	6400	0	1456	7798	0	2820	8330	0	2862	10560	0	3393	12110	0	3427	13030	0	3500	14730	0	3636
	18	4250	0	2428	6350	0	2485	7736	0	2866	8260	0	2923	10470	0	3459	12060	0	3563	12990	0	3631	14680	0	3771
	20	4200	0	2456	6300	0	2514	7680	0	2926	8200	0	2967	10400	0	3506	12000	0	3650	12750	0	3751	14600	0	3910
	22	4150	0	2485	6250	0	2273	7600	0	2955	8100	0	3050	10310	0	3572	11940	0	3766	12870	0	3861	14540	0	4040
	24	4100	0	2514	6200	0	2302	7544	0	3003	8040	0	3111	10240	0	3638	11880	0	3881	12810	0	3969	14360	0	4173
1.5+2.5 +5.0+6.0	16	4300	0	2429	6400	0	1456	7798	0	2820	8330	0	2862	10560	0	3393	12110	0	3427	13030	0	3500	14730	0	3636
	18	4250	0	2428	6350	0	2485	7736	0	2866	8260	0	2923	10470	0	3459	12060	0	3563	12990	0	3631	14680	0	3771
	20	4200	0	2456	6300	0	2514	7680	0	2926	8200	0	2967	10400	0	3506	12000	0	3650	12750	0	3751	14600	0	3910
	22	4150	0	2485	6250	0	2273	7600	0	2955	8100	0	3050	10310	0	3572	11940	0	3766	12870	0	3861	14540	0	4040
	24	4100	0	2514	6200	0	2302	7544	0	3003	8040	0	3111	10240	0	3638	11880	0	3881	12810	0	3969	14360	0	4173
1.5+3.5 +3.5+3.5	16	4300	0	2269	6400	0	1306	7798	0	2500	8330	0	2562	10560	0	2933	12110	0	2967	13030	0	3040	14730	0	3176
	18	4250	0	2278	6350	0	2335	7736	0	2548	8260	0	2623	10470	0	2999	12060	0	3103	12990	0	3161	14680	0	3311
	20	4200	0	2306	6300	0	2364	7680	0	2586	8200	0	2667	10400	0	3046	12000	0	3190	12750	0	3291	14600	0	3450
	22	4150	0	2335	6250	0	2123	7600	0	2635	8100	0	2730	10310	0	3112	11940	0	3306	12870	0	3401	14540	0	3580
	24	4100	0	2364	6200	0	2152	7544	0	2683	8040	0	2791	10240	0	3178	11880	0	3421	12810	0	3519	14360	0	3713
1.5+3.5 +3.5+4.2	16	4300	0	2279	6400	0	1336	7798	0	2560	8330	0	2622	10560	0	3033	12110	0	3067	13030	0	3140	14730	0	3276
	18	4250	0	2308	6350	0	2365	7736	0	2608	8260	0	2683	10470	0	3099	12060	0	3203	12990	0	3261	14680	0	3411
	20	4200	0	2336	6300	0	2394	7680	0	2646	8200	0	2727	10400	0	3146	12000	0	3290	12750	0	3391	14600	0	3550
	22	4150	0	2365	6250	0	2423	7600	0	2695	8100	0	2790	10310	0	3212	11940	0	3406	12870	0	3501	14540	0	3680
	24	4100	0	2394	6200	0	2452	7544	0	2743	8040	0	2851	10240	0	3278	11880	0	3521	12810	0	3619	14360	0	3813
1.5+3.5 +3.5+5.0	16	4300	0	2429	6400	0	1456	7798	0	2820	8330	0	2862	10560	0	3393	12110	0	3427	13030	0	3500	14730	0	3636
	18	4250	0	2428	6350	0	2485	7736	0	2866	8260	0	2923	10470	0	3459	12060	0	3563	12990	0	3631	14680	0	3771
	20	4200	0	2456	6300	0	2514	7680	0	2926	8200	0	2967	10400	0	3506	12000	0	3690	12750	0	3751	14600	0	3910
	22	4150	0	2485	6250	0	2273	7600	0	2955	8100	0	3050	10310	0	3572	11940	0	3766	12870	0	3861	14540	0	4040
	24	4100	0	2514	6200	0	2302	7544	0	3003	8040	0	3111	10240	0	3638	11880	0	3881	12810	0	3969	14360	0	4173
1.5+3.5 +3.5+6.0	16	4300	0	2429	6400	0	1456	7798	0	2820	8330	0	2862	10560	0	3393	12110	0	3427	13030	0	3500	14730	0	3636
	18	4250	0	2428	6350	0	2485	7736	0	2866	8260	0	2923	10470	0	3459	12060	0	3563	12990	0	3631	14680	0	3771
	20	4200	0	2456	6300	0	2514	7680	0	2926	8200	0	2967	10400	0	3506	12000	0	3690	12750	0	3751	14600	0	3910
	22	4150	0	2485	6250	0	2273	7600	0	2955	8100	0	3050	10310	0	3572	11940	0	3766	12870	0	3861	14540	0	4040
	24	4100	0	2514	6200	0	2302	7544	0	3003	8040	0	3111	10240	0	3638	11880	0	3881	12810	0	3969	14360	0	4173
1.5+3.5 +4.2+4.2	16	4300	0	2369	6400	0	1406	7798	0	2700	8330	0	2762	10560	0	3233	12110	0	3267	13030	0	3340	14730	0	3476
	18	4250	0	2378	6350	0	2435	7736	0	2746	8260	0	2823	10470	0	3299	12060	0	3403	12990	0	3461	14680	0	3611
	20	4200	0	2406	6300	0	2464	7680	0	2786	8200	0	2867	10400	0	3346	12000	0	3490	12750	0	3591	14600	0	3750
	22	4150	0	2435	6250	0	2223	7600	0	2835	8100	0	2930	10310	0	3412	11940	0	3606	12870	0	3701	14540	0	3880
	24	4100	0	2464	6200	0	2252	7544	0	2883	8040	0	2991	10240	0	3478	11880	0	3721	12810	0	3819	14360	0	4013

	INDOOR	OUTDOOR TEMPERATURE (°CDB)																							
	EDB	-15			-10			-7			-5			0			7			10			15		
	°C	TC	SHC	PI	TC	SHC	PI	TC	SHC	PI	TC	SHC	PI	TC	SHC	PI	TC	SHC	PI	TC	SHC	PI	TC	SHC	PI
1.5+3.5 +4.2+5.0	16	4300	0	2439	6400	0	2496	7798	0	2890	8330	0	2952	10560	0	3533	12110	0	3567	13030	0	3640	14730	0	3776
	18	4250	0	2468	6350	0	2525	7736	0	2938	8260	0	3013	10470	0	3599	12060	0	3703	12990	0	3761	14680	0	3911
	20	4200	0	2496	6300	0	2554	7680	0	2976	8200	0	3057	10400	0	3646	12000	0	3790	12750	0	3891	14600	0	4050
	22	4150	0	2525	6250	0	2583	7600	0	3025	8100	0	3120	10310	0	3712	11940	0	3906	12870	0	3901	14540	0	4150
	24	4100	0	2554	6200	0	2612	7544	0	3073	8040	0	3181	10240	0	3778	11880	0	3921	12810	0	4119	14360	0	4313
1.5+3.5 +4.2+6.0	16	4300	0	2439	6400	0	2496	7798	0	2890	8330	0	2952	10560	0	3533	12110	0	3567	13030	0	3640	14730	0	3776
	18	4250	0	2468	6350	0	2525	7736	0	2938	8260	0	3013	10470	0	3599	12060	0	3703	12990	0	3761	14680	0	3911
	20	4200	0	2496	6300	0	2554	7680	0	2976	8200	0	3057	10400	0	3646	12000	0	3790	12750	0	3891	14600	0	4050
	22	4150	0	2525	6250	0	2583	7600	0	3025	8100	0	3120	10310	0	3712	11940	0	3906	12870	0	3901	14540	0	4150
	24	4100	0	2554	6200	0	2612	7544	0	3073	8040	0	3181	10240	0	3778	11880	0	3921	12810	0	4119	14360	0	4313
1.5+3.5 +5.0+5.0	16	4300	0	2469	6400	0	2526	7798	0	2950	8330	0	3012	10560	0	3633	12110	0	3667	13030	0	3740	14730	0	3876
	18	4250	0	2498	6350	0	2555	7736	0	2998	8260	0	3073	10470	0	3699	12060	0	3803	12990	0	3861	14680	0	4011
	20	4200	0	2526	6300	0	2584	7680	0	3036	8200	0	3117	10400	0	3746	12000	0	3890	12750	0	3991	14600	0	4150
	22	4150	0	2555	6250	0	2613	7600	0	3085	8100	0	3180	10310	0	3812	11940	0	4006	12870	0	4001	14540	0	4250
	24	4100	0	2584	6200	0	2642	7544	0	3113	8040	0	3241	10240	0	3878	11880	0	4021	12810	0	4219	14360	0	4413
1.5+3.5 +5.0+6.0	16	4300	0	2469	6400	0	2526	7798	0	2950	8330	0	3012	10560	0	3633	12110	0	3667	13030	0	3740	14730	0	3876
	18	4250	0	2498	6350	0	2555	7736	0	2998	8260	0	3073	10470	0	3699	12060	0	3803	12990	0	3861	14680	0	4011
	20	4200	0	2526	6300	0	2584	7680	0	3036	8200	0	3117	10400	0	3746	12000	0	3890	12750	0	3991	14600	0	4150
	22	4150	0	2555	6250	0	2613	7600	0	3085	8100	0	3180	10310	0	3812	11940	0	4006	12870	0	4001	14540	0	4250
	24	4100	0	2584	6200	0	2642	7544	0	3113	8040	0	3241	10240	0	3878	11880	0	4021	12810	0	4219	14360	0	4413
1.5+4.2 +4.2+4.2	16	4300	0	2429	6400	0	1456	7798	0	2820	8330	0	2862	10560	0	3393	12110	0	3427	13030	0	3500	14730	0	3636
	18	4250	0	2428	6350	0	2485	7736	0	2866	8260	0	2923	10470	0	3459	12060	0	3563	12990	0	3631	14680	0	3771
	20	4200	0	2456	6300	0	2514	7680	0	2926	8200	0	2967	10400	0	3506	12000	0	3690	12750	0	3751	14600	0	3910
	22	4150	0	2485	6250	0	2273	7600	0	2955	8100	0	3050	10310	0	3572	11940	0	3766	12870	0	3861	14540	0	4040
	24	4100	0	2514	6200	0	2302	7544	0	3003	8040	0	3111	10240	0	3638	11880	0	3881	12810	0	3969	14360	0	4173
1.5+4.2 +4.2+5.0	16	4300	0	2469	6400	0	2526	7798	0	2950	8330	0	3012	10560	0	3633	12110	0	3667	13030	0	3740	14730	0	3876
	18	4250	0	2498	6350	0	2555	7736	0	2998	8260	0	3073	10470	0	3699	12060	0	3803	12990	0	3861	14680	0	4011
	20	4200	0	2526	6300	0	2584	7680	0	3036	8200	0	3117	10400	0	3746	12000	0	3890	12750	0	3991	14600	0	4150
	22	4150	0	2555	6250	0	2613	7600	0	3085	8100	0	3180	10310	0	3812	11940	0	4006	12870	0	4001	14540	0	4250
	24	4100	0	2584	6200	0	2642	7544	0	3113	8040	0	3241	10240	0	3878	11880	0	4021	12810	0	4219	14360	0	4413
1.5+4.2 +5.0+5.0	16	4300	0	2469	6400	0	2526	7798	0	2950	8330	0	3012	10560	0	3633	12110	0	3667	13030	0	3740	14730	0	3876
	18	4250	0	2498	6350	0	2555	7736	0	2998	8260	0	3073	10470	0	3699	12060	0	3803	12990	0	3861	14680	0	4011
	20	4200	0	2526	6300	0	2584	7680	0	3036	8200	0	3117	10400	0	3746	12000	0	3890	12750	0	3991	14600	0	4150
	22	4150	0	2555	6250	0	2613	7600	0	3085	8100	0	3180	10310	0	3812	11940	0	4006	12870	0	4001	14540	0	4250
	24	4100	0	2584	6200	0	2642	7544	0	3113	8040	0	3241	10240	0	3878	11880	0	4021	12810	0	4219	14360	0	4413
1.5+4.2 +4.2+6.0	16	4300	0	2469	6400	0	2526	7798	0	2950	8330	0	3012	10560	0	3633	12110	0	3667	13030	0	3740	14730	0	3876
	18	4250	0	2498	6350	0	2555	7736	0	2998	8260	0	3073	10470	0	3699	12060	0	3803	12990	0	3861	14680	0	4011
	20	4200	0	2526	6300	0	2584	7680	0	3036	8200	0	3117	10400	0	3746	12000	0	3890	12750	0	3991	14600	0	4150
	22	4150	0	2555	6250	0	2613	7600	0	3085	8100	0	3180	10310	0	3812	11940	0	4006	12870	0	4001	14540	0	4250
	24	4100	0	2584	6200	0	2642	7544	0	3113	8040	0	3241	10240	0	3878	11880	0	4021	12810	0	4219	14360	0	4413
1.8+1.8 +1.8+1.8	16	3600	0	1926	5700	0	1974	6498	0	2202	7030	0	2254	8560	0	2636	10110	0	2665	11030	0	2725	12730	0	2838
	18	3550	0	1950	5650	0	1998	6436	0	2242	6960	0	2304	8470	0	2692	10060	0	2778	10990	0	2826	12680	0	2951
	20	3500	0	1974	5600	0	2022	6380	0	2273	6900	0	2340	8400	0	2730	10000	0	2850	10750	0	2934	12600	0	3066
	22	3450	0	1998	5550	0	2046	6300	0	2314	6800	0	2393	8310	0	2785	9940	0	2946	10870	0	3025	12540	0	3174
	24	3400	0	2022	5500	0	2070	6244	0	2354	6740	0	2443	8240	0	2840	9880	0	3042	10810	0	3124	12360	0	3284
1.8+1.8 +1.8+2.5	16	3600	0	2078	5700	0	2132	6498	0	2299	7030	0	2358	8560	0	2710	10110	0	2742	11030	0	2810	12730	0	2937
	18	3550	0	2105	5650	0	2159	6436	0	2344	6960	0	2415	8470	0	2772	10060	0	2869	10990	0	2923	12680	0	3063
	20	3500	0	2132	5600	0	2186	6380	0	2379	6900	0	2455	8400	0	2815	10000	0	2950	10750	0	3045	12600	0	3193
	22	3450	0	2159	5550	0	2213	6300	0	2426	6800	0	2514	8310	0	2877	9940	0	3058	10870	0	3147	12540	0	3315
	24	3400	0	2186	5500	0	2240	6244	0	2471	6740	0	2571	8240	0	2939	9880	0	3166	10810	0	3258	12360	0	3439
1.8+1.8 +1.8+3.5	16	4200	0	2078	6300	0	2132	7698	0	2299	8230	0	2358	10360	0	2710	18910	0	2742	12830	0	2810	14530	0	2937
	18	4150	0	2105	6250	0	2159	7636	0	2244	8160	0	2415	10270	0	2772	11860	0	2869	12790	0	2923	14480	0	3063
	20	4100	0	2132	6200	0	2186	7580	0	2379	8100	0	2455	10200	0	2815	11800	0	2950	12550	0	3045	14400	0	3193
	22	4150	0	2159	6150	0	2213	7500	0	2436	8000	0	2514	10110	0	2877	11740	0	3058	12670	0	3147	14340	0	3315
	24	4000	0	2186	6100	0	2240	7444	0	2471	7940	0	2571	10040	0	2939	11680	0	3166	12610	0	3258	14160	0	3439

	INDOOR	OUTDOOR TEMPERATURE (°CDB)																							
	EDB	-15			-10			-7			-5			0			7			10			15		
	°C	TC	SHC	PI	TC	SHC	PI	TC	SHC	PI	TC	SHC	PI	TC	SHC	PI	TC	SHC	PI	TC	SHC	PI	TC	SHC	PI
1.8+1.8 +1.8+4.2	16	4300	0	2108	6300	0	2162	7798	0	2359	8300	0	2418	10560	0	2810	19110	0	2842	13030	0	2910	14730	0	3037
	18	4250	0	2135	6250	0	2186	7736	0	2304	8260	0	2475	10470	0	2872	12060	0	2969	12990	0	3023	14680	0	3163
	20	4200	0	2162	6200	0	2216	7680	0	2439	8200	0	2515	10400	0	2915	12000	0	3050	12750	0	3145	14600	0	3293
	22	4250	0	2189	6150	0	2243	7600	0	2496	8100	0	2574	10310	0	2977	11940	0	3158	12870	0	3247	14540	0	3415
	24	4100	0	2216	6100	0	2270	7544	0	2531	8040	0	2631	10240	0	3039	11880	0	3266	12810	0	3358	14360	0	3539
1.8+1.8+1.8+5 .0	16	4300	0	2238	6400	0	2292	7798	0	2619	8330	0	2678	10560	0	3190	12110	0	3222	13030	0	3290	14730	0	3417
	18	4250	0	2265	6350	0	2319	7736	0	2664	8260	0	2735	10470	0	3252	12060	0	3349	12990	0	3403	14680	0	3543
	20	4200	0	2292	6300	0	2346	7680	0	2699	8200	0	2775	10400	0	3295	12000	0	3430	12750	0	3525	14600	0	3673
	22	4150	0	2319	6250	0	2373	7600	0	2746	8100	0	2834	10310	0	3357	11940	0	3538	12870	0	3627	14540	0	3795
	24	4100	0	2346	6200	0	2400	7544	0	2791	8040	0	2891	10240	0	3419	11880	0	3646	12810	0	3738	14360	0	3919
1.8+1.8 +1.8+6.0	16	4300	0	2238	6400	0	2292	7798	0	2619	8330	0	2678	10560	0	3190	12110	0	3222	13030	0	3290	14730	0	3417
	18	4250	0	2265	6350	0	2319	7736	0	2664	8260	0	2735	10470	0	3252	12060	0	3349	12990	0	3403	14680	0	3543
	20	4200	0	2292	6300	0	2346	7680	0	2699	8200	0	2775	10400	0	3295	12000	0	3430	12750	0	3525	14600	0	3673
	22	4150	0	2319	6250	0	2373	7600	0	2746	8100	0	2834	10310	0	3357	11940	0	3538	12870	0	3627	14540	0	3795
	24	4100	0	2346	6200	0	2400	7544	0	2791	8040	0	2891	10240	0	3419	11880	0	3646	12810	0	3738	14360	0	3919
1.8+1.8 +2.5+2.5	16	4200	0	2078	6300	0	2132	7698	0	2299	8230	0	2358	10360	0	2710	18910	0	2742	12830	0	2810	14530	0	2937
	18	4150	0	2105	6250	0	2159	7636	0	2244	8160	0	2415	10270	0	2772	11860	0	2869	12790	0	2923	14480	0	3063
	20	4100	0	2132	6200	0	2186	7580	0	2379	8100	0	2455	10200	0	2815	11800	0	2950	12550	0	3045	14400	0	3193
	22	4150	0	2159	6150	0	2213	7500	0	2436	8000	0	2514	10110	0	2877	11740	0	3058	12670	0	3147	14340	0	3315
	24	4000	0	2186	6100	0	2240	7444	0	2471	7940	0	2571	10040	0	2939	11680	0	3166	12610	0	3258	14160	0	3439
1.8+1.8 +2.5+3.5	16	4300	0	2108	6300	0	2162	7798	0	2359	8300	0	2418	10560	0	2810	19110	0	2842	13030	0	2910	14730	0	3037
	18	4250	0	2135	6250	0	2186	7736	0	2304	8260	0	2475	10470	0	2872	12060	0	2969	12990	0	3023	14680	0	3163
	20	4200	0	2162	6200	0	2216	7680	0	2439	8200	0	2515	10400	0	2915	12000	0	3050	12750	0	3145	14600	0	3293
	22	4250	0	2189	6150	0	2243	7600	0	2496	8100	0	2574	10310	0	2977	11940	0	3158	12870	0	3247	14540	0	3415
	24	4100	0	2216	6100	0	2270	7544	0	2531	8040	0	2631	10240	0	3039	11880	0	3266	12810	0	3358	14360	0	3539
1.8+1.8 +2.5+4.2	16	4300	0	2138	6300	0	2192	7798	0	2419	8300	0	2478	10560	0	2910	19110	0	2942	13030	0	3010	14730	0	3137
	18	4250	0	2165	6250	0	2216	7736	0	2364	8260	0	2535	10470	0	2972	12060	0	3069	12990	0	3123	14680	0	3263
	20	4200	0	2192	6200	0	2246	7680	0	2499	8200	0	2575	10400	0	3015	12000	0	3150	12750	0	3245	14600	0	3393
	22	4250	0	2219	6150	0	2273	7600	0	2556	8100	0	2634	10310	0	3077	11940	0	3258	12870	0	3347	14540	0	3515
	24	4100	0	2246	6100	0	2300	7544	0	2591	8040	0	2691	10240	0	3139	11880	0	3366	12810	0	3458	14360	0	3639
1.8+1.8 +2.5+5.0	16	4300	0	2238	6400	0	2292	7798	0	2619	8330	0	2678	10560	0	3190	12110	0	3222	13030	0	3290	14730	0	3417
	18	4250	0	2265	6350	0	2319	7736	0	2664	8260	0	2735	10470	0	3252	12060	0	3349	12990	0	3403	14680	0	3543
	20	4200	0	2292	6300	0	2346	7680	0	2699	8200	0	2775	10400	0	3295	12000	0	3490	12750	0	3525	14600	0	3673
	22	4150	0	2319	6250	0	2373	7600	0	2746	8100	0	2834	10310	0	3357	11940	0	3538	12870	0	3627	14540	0	3795
	24	4100	0	2346	6200	0	2400	7544	0	2791	8040	0	2891	10240	0	3419	11880	0	3646	12810	0	3738	14360	0	3919
1.8+1.8 +2.5+6.0	16	4300	0	2238	6400	0	2292	7798	0	2619	8330	0	2678	10560	0	3190	12110	0	3222	13030	0	3290	14730	0	3417
	18	4250	0	2265	6350	0	2319	7736	0	2664	8260	0	2735	10470	0	3252	12060	0	3349	12990	0	3403	14680	0	3543
	20	4200	0	2292	6300	0	2346	7680	0	2699	8200	0	2775	10400	0	3295	12000	0	3490	12750	0	3525	14600	0	3673
	22	4150	0	2319	6250	0	2373	7600	0	2746	8100	0	2834	10310	0	3357	11940	0	3538	12870	0	3627	14540	0	3795
	24	4100	0	2346	6200	0	2400	7544	0	2791	8040	0	2891	10240	0	3419	11880	0	3646	12810	0	3738	14360	0	3919

	INDOOR	OUTDOOR TEMPERATURE (°CDB)																							
	EDB	-15			-10			-7			-5			0			7			10			15		
	°C	TC	SHC	PI	TC	SHC	PI	TC	SHC	PI	TC	SHC	PI	TC	SHC	PI	TC	SHC	PI	TC	SHC	PI	TC	SHC	PI
1.8+1.8 +3.5+3.5	16	4300	0	2138	6300	0	2192	7798	0	2419	8300	0	2478	10560	0	2910	19110	0	2942	13030	0	3010	14730	0	3137
	18	4250	0	2165	6250	0	2216	7736	0	2364	8260	0	2535	10470	0	2972	12060	0	3069	12990	0	3123	14680	0	3263
	20	4200	0	2192	6200	0	2246	7680	0	2499	8200	0	2575	10400	0	3015	12000	0	3130	12750	0	3245	14600	0	3393
	22	4250	0	2219	6150	0	2273	7600	0	2556	8100	0	2634	10310	0	3077	11940	0	3258	12870	0	3347	14540	0	3515
	24	4100	0	2246	6100	0	2300	7544	0	2591	8040	0	2691	10240	0	3139	11880	0	3366	12810	0	3458	14360	0	3639
1.8+1.8 +3.5+4.2	16	4300	0	2138	6300	0	2192	7798	0	2419	8300	0	2478	10560	0	2910	19110	0	2942	13030	0	3010	14730	0	3137
	18	4250	0	2165	6250	0	2216	7736	0	2364	8260	0	2535	10470	0	2972	12060	0	3069	12990	0	3123	14680	0	3263
	20	4200	0	2192	6200	0	2246	7680	0	2499	8200	0	2575	10400	0	3015	12000	0	3180	12750	0	3245	14600	0	3393
	22	4250	0	2219	6150	0	2273	7600	0	2556	8100	0	2634	10310	0	3077	11940	0	3258	12870	0	3347	14540	0	3515
	24	4100	0	2246	6100	0	2300	7544	0	2591	8040	0	2691	10240	0	3139	11880	0	3366	12810	0	3458	14360	0	3639
1.8+1.8 +3.5+5.0	16	4300	0	2328	6400	0	2382	7488	0	2799	8330	0	2858	10560	0	3450	12110	0	3482	13030	0	3550	14730	0	3677
	18	4250	0	2355	6350	0	2409	7426	0	2844	8260	0	2915	10470	0	3512	12060	0	3609	12990	0	3663	14680	0	3803
	20	4200	0	2382	6300	0	2436	7370	0	2879	8200	0	2955	10400	0	3555	12000	0	3690	12750	0	3785	14600	0	3933
	22	4150	0	2409	6250	0	2463	7290	0	2926	8100	0	3014	10310	0	3617	11940	0	3798	12870	0	3887	14540	0	4055
	24	4100	0	2436	6200	0	2490	7234	0	2971	8040	0	3071	10240	0	3679	11880	0	3906	12810	0	3998	14360	0	4179
1.8+1.8 +3.5+6.0	16	4300	0	2328	6400	0	2382	7488	0	2799	8330	0	2858	10560	0	3450	12110	0	3482	13030	0	3550	14730	0	3677
	18	4250	0	2355	6350	0	2409	7426	0	2844	8260	0	2915	10470	0	3512	12060	0	3609	12990	0	3663	14680	0	3803
	20	4200	0	2382	6300	0	2436	7370	0	2879	8200	0	2955	10400	0	3555	12000	0	3690	12750	0	3785	14600	0	3933
	22	4150	0	2409	6250	0	2463	7290	0	2926	8100	0	3014	10310	0	3617	11940	0	3798	12870	0	3887	14540	0	4055
	24	4100	0	2436	6200	0	2490	7234	0	2971	8040	0	3071	10240	0	3679	11880	0	3906	12810	0	3998	14360	0	4179
1.8+1.8 +4.2+4.2	16	4300	0	2328	6400	0	2382	7488	0	2799	8330	0	2858	10560	0	3450	12110	0	3482	13030	0	3550	14730	0	3677
	18	4250	0	2355	6350	0	2409	7426	0	2844	8260	0	2915	10470	0	3512	12060	0	3609	12990	0	3663	14680	0	3803
	20	4200	0	2382	6300	0	2436	7370	0	2879	8200	0	2955	10400	0	3555	12000	0	3690	12750	0	3785	14600	0	3933
	22	4150	0	2409	6250	0	2463	7290	0	2926	8100	0	3014	10310	0	3617	11940	0	3798	12870	0	3887	14540	0	4055
	24	4100	0	2436	6200	0	2490	7234	0	2971	8040	0	3071	10240	0	3679	11880	0	3906	12810	0	3998	14360	0	4179
1.8+1.8 +4.2+5.0	16	4300	0	2328	6400	0	2382	7488	0	2799	8330	0	2858	10560	0	3450	12110	0	3482	13030	0	3550	14730	0	3677
	18	4250	0	2355	6350	0	2409	7426	0	2844	8260	0	2915	10470	0	3512	12060	0	3609	12990	0	3663	14680	0	3803
	20	4200	0	2382	6300	0	2436	7370	0	2879	8200	0	2955	10400	0	3555	12000	0	3690	12750	0	3785	14600	0	3933
	22	4150	0	2409	6250	0	2463	7290	0	2926	8100	0	3014	10310	0	3617	11940	0	3798	12870	0	3887	14540	0	4055
	24	4100	0	2436	6200	0	2490	7234	0	2971	8040	0	3071	10240	0	3679	11880	0	3906	12810	0	3998	14360	0	4179
1.8+1.8 +4.2+6.0	16	4300	0	2328	6400	0	2382	7488	0	2799	8330	0	2858	10560	0	3450	12110	0	3482	13030	0	3550	14730	0	3677
	18	4250	0	2355	6350	0	2409	7426	0	2844	8260	0	2915	10470	0	3512	12060	0	3609	12990	0	3663	14680	0	3803
	20	4200	0	2382	6300	0	2436	7370	0	2879	8200	0	2955	10400	0	3555	12000	0	3690	12750	0	3785	14600	0	3933
	22	4150	0	2409	6250	0	2463	7290	0	2926	8100	0	3014	10310	0	3617	11940	0	3798	12870	0	3887	14540	0	4055
	24	4100	0	2436	6200	0	2490	7234	0	2971	8040	0	3071	10240	0	3679	11880	0	3906	12810	0	3998	14360	0	4179
1.8+1.8 +5.0+5.0	16	4300	0	2358	6400	0	2412	7488	0	2859	8330	0	2918	10560	0	3550	12110	0	3582	13030	0	3650	14730	0	3777
	18	4250	0	2385	6350	0	2439	7426	0	2904	8260	0	2975	10470	0	3612	12060	0	3709	12990	0	3763	14680	0	3903
	20	4200	0	2412	6300	0	2466	7370	0	2939	8200	0	3015	10400	0	3655	12000	0	3790	12750	0	3885	14600	0	4033
	22	4150	0	2439	6250	0	2493	7290	0	2986	8100	0	3074	10310	0	3717	11940	0	3898	12870	0	3987	14540	0	4155
	24	4100	0	2466	6200	0	2520	7234	0	3031	8040	0	3131	10240	0	3779	11880	0	4006	12810	0	4098	14360	0	4279

	INDOOR	OUTDOOR TEMPERATURE (°CDB)																							
	EDB	-15			-10			-7			-5			0			7			10			15		
	°C	TC	SHC	PI	TC	SHC	PI	TC	SHC	PI	TC	SHC	PI	TC	SHC	PI	TC	SHC	PI	TC	SHC	PI	TC	SHC	PI
1.8+1.8 +5.0+6.0	16	4300	0	2358	6400	0	2412	7488	0	2859	8330	0	2918	10560	0	3550	12110	0	3582	13030	0	3650	14730	0	3777
	18	4250	0	2385	6350	0	2439	7426	0	2904	8260	0	2975	10470	0	3612	12060	0	3709	12990	0	3763	14680	0	3903
	20	4200	0	2412	6300	0	2466	7370	0	2939	8200	0	3015	10400	0	3655	12000	0	3790	12750	0	3885	14600	0	4033
	22	4150	0	2439	6250	0	2493	7290	0	2986	8100	0	3074	10310	0	3717	11940	0	3898	12870	0	3987	14540	0	4155
	24	4100	0	2466	6200	0	2520	7234	0	3031	8040	0	3131	10240	0	3779	11880	0	4006	12810	0	4098	14360	0	4279
1.8+2.5 +2.5+2.5	16	4300	0	2108	6300	0	2162	7798	0	2359	8300	0	2418	10560	0	2810	19110	0	2842	13030	0	2910	14730	0	3037
	18	4250	0	2135	6250	0	2186	7736	0	2304	8260	0	2475	10470	0	2872	12060	0	2969	12990	0	3023	14680	0	3163
	20	4200	0	2162	6200	0	2216	7680	0	2439	8200	0	2515	10400	0	2915	12000	0	3050	12750	0	3145	14600	0	3293
	22	4250	0	2189	6150	0	2243	7600	0	2496	8100	0	2574	10310	0	2977	11940	0	3158	12870	0	3247	14540	0	3415
	24	4100	0	2216	6100	0	2270	7544	0	2531	8040	0	2631	10240	0	3039	11880	0	3266	12810	0	3358	14360	0	3539
1.8+2.5 +2.5+3.5	16	4300	0	2138	6300	0	2192	7798	0	2419	8300	0	2478	10560	0	2910	19110	0	2942	13030	0	3010	14730	0	3137
	18	4250	0	2165	6250	0	2216	7736	0	2364	8260	0	2535	10470	0	2972	12060	0	3069	12990	0	3123	14680	0	3263
	20	4200	0	2192	6200	0	2246	7680	0	2499	8200	0	2575	10400	0	3015	12000	0	3150	12750	0	3245	14600	0	3393
	22	4250	0	2219	6150	0	2273	7600	0	2556	8100	0	2634	10310	0	3077	11940	0	3258	12870	0	3347	14540	0	3515
	24	4100	0	2246	6100	0	2300	7544	0	2591	8040	0	2691	10240	0	3139	11880	0	3366	12810	0	3458	14360	0	3639
1.8+2.5 +2.5+4.2	16	4300	0	2278	6400	0	2332	7798	0	2699	8330	0	2758	10560	0	3290	12110	0	3322	13030	0	3390	14730	0	3517
	18	4250	0	2305	6350	0	2359	7736	0	2744	8260	0	2815	10470	0	3352	12060	0	3449	12990	0	3503	14680	0	3643
	20	4200	0	2332	6300	0	2386	7680	0	2779	8200	0	2855	10400	0	3395	12000	0	3530	12750	0	3625	14600	0	3773
	22	4150	0	2359	6250	0	2413	7600	0	2826	8100	0	2914	10310	0	3457	11940	0	3638	12870	0	3727	14540	0	3895
	24	4100	0	2386	6200	0	2440	7544	0	2871	8040	0	2971	10240	0	3519	11880	0	3746	12810	0	3838	14360	0	4019
1.8+2.5 +2.5+5.0	16	4300	0	2278	6400	0	2332	7798	0	2139	7030	0	2758	10560	0	3290	12110	0	3322	13030	0	3390	14730	0	3517
	18	4250	0	2305	6350	0	2359	7736	0	2184	6960	0	2815	10470	0	3352	12060	0	3449	12990	0	3503	14680	0	3643
	20	4200	0	2332	6300	0	2386	7680	0	2219	6900	0	2855	10400	0	3395	12000	0	3530	12750	0	3625	14600	0	3773
	22	4150	0	2359	6250	0	2413	7600	0	2266	6800	0	2914	10310	0	3457	11940	0	3638	12870	0	3727	14540	0	3895
	24	4100	0	2386	6200	0	2440	7544	0	2311	6740	0	2971	10240	0	3519	11880	0	3746	12810	0	3838	14360	0	4019
1.8+2.5 +2.5+6.0	16	4300	0	2278	6400	0	2332	7798	0	2139	7030	0	2758	10560	0	3290	12110	0	3322	13030	0	3390	14730	0	3517
	18	4250	0	2305	6350	0	2359	7736	0	2184	6960	0	2815	10470	0	3352	12060	0	3449	12990	0	3503	14680	0	3643
	20	4200	0	2332	6300	0	2386	7680	0	2219	6900	0	2855	10400	0	3395	12000	0	3530	12750	0	3625	14600	0	3773
	22	4150	0	2359	6250	0	2413	7600	0	2266	6800	0	2914	10310	0	3457	11940	0	3638	12870	0	3727	14540	0	3895
	24	4100	0	2386	6200	0	2440	7544	0	2311	6740	0	2971	10240	0	3519	11880	0	3746	12810	0	3838	14360	0	4019
1.8+2.5 +3.5+3.5	16	4300	0	2138	6300	0	2192	7798	0	2419	8300	0	2478	10560	0	2910	19110	0	2942	13030	0	3010	14730	0	3137
	18	4250	0	2165	6250	0	2216	7736	0	2364	8260	0	2535	10470	0	2972	12060	0	3069	12990	0	3123	14680	0	3263
	20	4200	0	2192	6200	0	2246	7680	0	2499	8200	0	2575	10400	0	3015	12000	0	3180	12750	0	3245	14600	0	3393
	22	4250	0	2219	6150	0	2273	7600	0	2556	8100	0	2634	10310	0	3077	11940	0	3258	12870	0	3347	14540	0	3515
	24	4100	0	2246	6100	0	2300	7544	0	2591	8040	0	2691	10240	0	3139	11880	0	3366	12810	0	3458	14360	0	3639
1.8+2.5 +3.5+4.2	16	4300	0	2178	6300	0	2232	7798	0	2499	8300	0	2558	10560	0	3040	19110	0	3072	13030	0	3140	14730	0	3267
	18	4250	0	2205	6250	0	2256	7736	0	2444	8260	0	2615	10470	0	3102	12060	0	3199	12990	0	3253	14680	0	3393
	20	4200	0	2232	6200	0	2286	7680	0	2579	8200	0	2655	10400	0	3145	12000	0	3280	12750	0	3375	14600	0	3523
	22	4250	0	2259	6150	0	2313	7600	0	2636	8100	0	2714	10310	0	3207	11940	0	3388	12870	0	3477	14540	0	3645
	24	4100	0	2286	6100	0	2340	7544	0	2671	8040	0	2771	10240	0	3269	11880	0	3496	12810	0	3588	14360	0	3769

	INDOOR	OUTDOOR TEMPERATURE (°CDB)																							
	EDB	-15			-10			-7			-5			0			7			10			15		
	°C	TC	SHC	PI	TC	SHC	PI	TC	SHC	PI	TC	SHC	PI	TC	SHC	PI	TC	SHC	PI	TC	SHC	PI	TC	SHC	PI
1.8+2.5 +3.5+5.0	16	4300	0	2358	6400	0	2412	7488	0	2859	8330	0	2918	10560	0	3550	12110	0	3582	13030	0	3650	14730	0	3777
	18	4250	0	2385	6350	0	2439	7426	0	2904	8260	0	2975	10470	0	3612	12060	0	3709	12990	0	3763	14680	0	3903
	20	4200	0	2412	6300	0	2466	7370	0	2939	8200	0	3015	10400	0	3655	12000	0	3790	12750	0	3885	14600	0	4033
	22	4150	0	2439	6250	0	2493	7290	0	2986	8100	0	3074	10310	0	3717	11940	0	3898	12870	0	3987	14540	0	4155
	24	4100	0	2466	6200	0	2520	7234	0	3031	8040	0	3131	10240	0	3779	11880	0	4006	12810	0	4098	14360	0	4279
1.8+2.5 +3.5+6.0	16	4300	0	2358	6400	0	2412	7488	0	2859	8330	0	2918	10560	0	3550	12110	0	3582	13030	0	3650	14730	0	3777
	18	4250	0	2385	6350	0	2439	7426	0	2904	8260	0	2975	10470	0	3612	12060	0	3709	12990	0	3763	14680	0	3903
	20	4200	0	2412	6300	0	2466	7370	0	2939	8200	0	3015	10400	0	3655	12000	0	3790	12750	0	3885	14600	0	4033
	22	4150	0	2439	6250	0	2493	7290	0	2986	8100	0	3074	10310	0	3717	11940	0	3898	12870	0	3987	14540	0	4155
	24	4100	0	2466	6200	0	2520	7234	0	3031	8040	0	3131	10240	0	3779	11880	0	4006	12810	0	4098	14360	0	4279
1.8+2.5 +4.2+4.2	16	4300	0	2316	6400	0	2369	7798	0	2824	8330	0	2881	10560	0	3516	12110	0	3547	13030	0	3613	14730	0	3737
	18	4250	0	2343	6350	0	2395	7736	0	2868	8260	0	2936	10470	0	3576	12060	0	3671	12990	0	3724	14680	0	3860
	20	4200	0	2369	6300	0	2421	7680	0	2902	8200	0	2976	10400	0	3619	12000	0	3750	12750	0	3842	14600	0	3987
	22	4150	0	2395	6250	0	2448	7600	0	2947	8100	0	3033	10310	0	3679	11940	0	3855	12870	0	3942	14540	0	4105
	24	4100	0	2421	6200	0	2474	7544	0	2991	8040	0	3089	10240	0	3739	11880	0	3960	12810	0	4050	14360	0	4226
1.8+2.5 +4.2+5.0	16	4300	0	2316	6400	0	2369	7798	0	2824	8330	0	2881	10560	0	3516	12110	0	3547	13030	0	3613	14730	0	3737
	18	4250	0	2343	6350	0	2395	7736	0	2868	8260	0	2936	10470	0	3576	12060	0	3671	12990	0	3724	14680	0	3860
	20	4200	0	2369	6300	0	2421	7680	0	2902	8200	0	2976	10400	0	3619	12000	0	3750	12750	0	3842	14600	0	3987
	22	4150	0	2395	6250	0	2448	7600	0	2947	8100	0	3033	10310	0	3679	11940	0	3855	12870	0	3942	14540	0	4105
	24	4100	0	2421	6200	0	2474	7544	0	2991	8040	0	3089	10240	0	3739	11880	0	3960	12810	0	4050	14360	0	4226
1.8+2.5 +4.2+6.0	16	4300	0	2316	6400	0	2369	7798	0	2824	8330	0	2881	10560	0	3516	12110	0	3547	13030	0	3613	14730	0	3737
	18	4250	0	2343	6350	0	2395	7736	0	2868	8260	0	2936	10470	0	3576	12060	0	3671	12990	0	3724	14680	0	3860
	20	4200	0	2369	6300	0	2421	7680	0	2902	8200	0	2976	10400	0	3619	12000	0	3680	12750	0	3842	14600	0	3987
	22	4150	0	2395	6250	0	2448	7600	0	2947	8100	0	3033	10310	0	3679	11940	0	3855	12870	0	3942	14540	0	4105
	24	4100	0	2421	6200	0	2474	7544	0	2991	8040	0	3089	10240	0	3739	11880	0	3960	12810	0	4050	14360	0	4226
1.8+2.5 +5.0+5.0	16	4300	0	2316	6400	0	2369	7798	0	2824	8330	0	2881	10560	0	3516	12110	0	3547	13030	0	3613	14730	0	3737
	18	4250	0	2343	6350	0	2395	7736	0	2868	8260	0	2936	10470	0	3576	12060	0	3671	12990	0	3724	14680	0	3860
	20	4200	0	2369	6300	0	2421	7680	0	2902	8200	0	2976	10400	0	3619	12000	0	3680	12750	0	3842	14600	0	3987
	22	4150	0	2395	6250	0	2448	7600	0	2947	8100	0	3033	10310	0	3679	11940	0	3855	12870	0	3942	14540	0	4105
	24	4100	0	2421	6200	0	2474	7544	0	2991	8040	0	3089	10240	0	3739	11880	0	3960	12810	0	4050	14360	0	4226
1.8+2.5 +5.0+6.0	16	4300	0	2316	6400	0	2369	7798	0	2824	8330	0	2881	10560	0	3516	12110	0	3547	13030	0	3613	14730	0	3737
	18	4250	0	2343	6350	0	2395	7736	0	2868	8260	0	2936	10470	0	3576	12060	0	3671	12990	0	3724	14680	0	3860
	20	4200	0	2369	6300	0	2421	7680	0	2902	8200	0	2976	10400	0	3619	12000	0	3680	12750	0	3842	14600	0	3987
	22	4150	0	2395	6250	0	2448	7600	0	2947	8100	0	3033	10310	0	3679	11940	0	3855	12870	0	3942	14540	0	4105
	24	4100	0	2421	6200	0	2474	7544	0	2991	8040	0	3089	10240	0	3739	11880	0	3960	12810	0	4050	14360	0	4226
1.8+2.5 +6.0+6.0	16	4300	0	2316	6400	0	2369	7798	0	2824	8330	0	2881	10560	0	3516	12110	0	3547	13030	0	3613	14730	0	3737
	18	4250	0	2343	6350	0	2395	7736	0	2868	8260	0	2936	10470	0	3576	12060	0	3671	12990	0	3724	14680	0	3860
	20	4200	0	2369	6300	0	2421	7680	0	2902	8200	0	2976	10400	0	3619	12000	0	3680	12750	0	3842	14600	0	3987
	22	4150	0	2395	6250	0	2448	7600	0	2947	8100	0	3033	10310	0	3679	11940	0	3855	12870	0	3942	14540	0	4105
	24	4100	0	2421	6200	0	2474	7544	0	2991	8040	0	3089	10240	0	3739	11880	0	3960	12810	0	4050	14360	0	4226
1.8+3.5 +3.5+3.5	16	4300	0	2178	6300	0	2232	7798	0	2499	8300	0	2558	10560	0	3040	19110	0	3072	13030	0	3140	14730	0	3267
	18	4250	0	2205	6250	0	2256	7736	0	2444	8260	0	2615	10470	0	3102	12060	0	3199	12990	0	3253	14680	0	3393
	20	4200	0	2232	6200	0	2286	7680	0	2579	8200	0	2655	10400	0	3145	12000	0	3280	12750	0	3375	14600	0	3523
	22	4250	0	2259	6150	0	2313	7600	0	2636	8100	0	2714	10310	0	3207	11940	0	3388	12870	0	3477	14540	0	3645
	24	4100	0	2286	6100	0	2340	7544	0	2671	8040	0	2771	10240	0	3269	11880	0	3496	12810	0	3588	14360	0	3769

	INDOOR	OUTDOOR TEMPERATURE (°CDB)																							
	EDB	-15			-10			-7			-5			0			7			10			15		
	°C	TC	SHC	PI	TC	SHC	PI	TC	SHC	PI	TC	SHC	PI	TC	SHC	PI	TC	SHC	PI	TC	SHC	PI	TC	SHC	PI
1.8+3.5 +3.5+4.2	16	4300	0	2208	6300	0	2262	7798	0	2559	8300	0	2618	10560	0	3110	19110	0	3142	13030	0	3210	14730	0	3337
	18	4250	0	2235	6250	0	2286	7736	0	2504	8260	0	2675	10470	0	3172	12060	0	3269	12990	0	3323	14680	0	3463
	20	4200	0	2262	6200	0	2316	7680	0	2639	8200	0	2715	10400	0	3215	12000	0	3350	12750	0	3445	14600	0	3593
	22	4250	0	2289	6150	0	2343	7600	0	2696	8100	0	2774	10310	0	3277	11940	0	3458	12870	0	3547	14540	0	3715
	24	4100	0	2316	6100	0	2370	7544	0	2731	8040	0	2831	10240	0	3339	11880	0	3566	12810	0	3658	14360	0	3839
1.8+3.5+3.5 +5 .0	16	4300	0	2358	6400	0	2412	7488	0	2859	8330	0	2918	10560	0	3550	12110	0	3582	13030	0	3650	14730	0	3777
	18	4250	0	2385	6350	0	2439	7426	0	2904	8260	0	2975	10470	0	3612	12060	0	3709	12990	0	3763	14680	0	3903
	20	4200	0	2412	6300	0	2466	7370	0	2939	8200	0	3015	10400	0	3655	12000	0	3850	12750	0	3885	14600	0	4033
	22	4150	0	2439	6250	0	2493	7290	0	2986	8100	0	3074	10310	0	3717	11940	0	3898	12870	0	3987	14540	0	4155
	24	4100	0	2466	6200	0	2520	7234	0	3031	8040	0	3131	10240	0	3779	11880	0	4006	12810	0	4098	14360	0	4279
1.8+3.5 +3.5+6.0	16	4300	0	2358	6400	0	2412	7488	0	2859	8330	0	2918	10560	0	3550	12110	0	3582	13030	0	3650	14730	0	3777
	18	4250	0	2385	6350	0	2439	7426	0	2904	8260	0	2975	10470	0	3612	12060	0	3709	12990	0	3763	14680	0	3903
	20	4200	0	2412	6300	0	2466	7370	0	2939	8200	0	3015	10400	0	3655	12000	0	3850	12750	0	3885	14600	0	4033
	22	4150	0	2439	6250	0	2493	7290	0	2986	8100	0	3074	10310	0	3717	11940	0	3898	12870	0	3987	14540	0	4155
	24	4100	0	2466	6200	0	2520	7234	0	3031	8040	0	3131	10240	0	3779	11880	0	4006	12810	0	4098	14360	0	4279
1.8+3.5 +4.2+4.2	16	4300	0	1946	6400	0	1999	7488	0	2084	8330	0	2141	10560	0	2396	12110	0	2427	13030	0	2493	14730	0	2617
	18	4250	0	1973	6350	0	2025	7426	0	2128	8260	0	2196	10470	0	2456	12060	0	2551	12990	0	2604	14680	0	2740
	20	4200	0	1999	6300	0	2051	7370	0	2162	8200	0	2236	10400	0	2499	12000	0	2630	12750	0	2722	14600	0	2867
	22	4150	0	2025	6250	0	2078	7290	0	2207	8100	0	2293	10310	0	2559	11940	0	2735	12870	0	2822	14540	0	2985
	24	4100	0	2051	6200	0	2104	7234	0	2251	8040	0	2349	10240	0	2619	11880	0	2840	12810	0	2930	14360	0	3106
1.8+3.5 +4.2+5.0	16	4300	0	2346	6400	0	2399	7798	0	2884	8330	0	2941	10560	0	3616	12110	0	3647	13030	0	3713	14730	0	3837
	18	4250	0	2373	6350	0	2425	7736	0	2928	8260	0	2996	10470	0	3676	12060	0	3771	12990	0	3824	14680	0	3960
	20	4200	0	2399	6300	0	2451	7680	0	2962	8200	0	3036	10400	0	3719	12000	0	3850	12750	0	3942	14600	0	4087
	22	4150	0	2425	6250	0	2478	7600	0	3007	8100	0	3093	10310	0	3779	11940	0	3955	12870	0	4042	14540	0	4205
	24	4100	0	2451	6200	0	2504	7544	0	3051	8040	0	3149	10240	0	3839	11880	0	4060	12810	0	4150	14360	0	4326
1.8+3.5 +4.2+6.0	16	4300	0	2346	6400	0	2399	7798	0	2884	8330	0	2941	10560	0	3616	12110	0	3647	13030	0	3713	14730	0	3837
	18	4250	0	2373	6350	0	2425	7736	0	2928	8260	0	2996	10470	0	3676	12060	0	3771	12990	0	3824	14680	0	3960
	20	4200	0	2399	6300	0	2451	7680	0	2962	8200	0	3036	10400	0	3719	12000	0	3850	12750	0	3942	14600	0	4087
	22	4150	0	2425	6250	0	2478	7600	0	3007	8100	0	3093	10310	0	3779	11940	0	3955	12870	0	4042	14540	0	4205
	24	4100	0	2451	6200	0	2504	7544	0	3051	8040	0	3149	10240	0	3839	11880	0	4060	12810	0	4150	14360	0	4326
1.8+3.5 +5.0+5.0	16	4300	0	2396	6400	0	2449	7798	0	2984	8330	0	3041	10560	0	3766	12110	0	3797	13030	0	3863	14730	0	3987
	18	4250	0	2423	6350	0	2475	7736	0	3028	8260	0	3096	10470	0	3826	12060	0	3921	12990	0	3974	14680	0	4110
	20	4200	0	2449	6300	0	2501	7680	0	3062	8200	0	3136	10400	0	3869	12000	0	4000	12750	0	4092	14600	0	4237
	22	4150	0	2475	6250	0	2528	7600	0	3107	8100	0	3193	10310	0	3929	11940	0	4105	12870	0	4192	14540	0	4355
	24	4100	0	2501	6200	0	2554	7544	0	3151	8040	0	3249	10240	0	3989	11880	0	4210	12810	0	4300	14360	0	4476
1.8+3.5 +5.0+6.0	16	4300	0	2396	6400	0	2449	7798	0	2984	8330	0	3041	10560	0	3766	12110	0	3797	13030	0	3863	14730	0	3987
	18	4250	0	2423	6350	0	2475	7736	0	3028	8260	0	3096	10470	0	3826	12060	0	3921	12990	0	3974	14680	0	4110
	20	4200	0	2449	6300	0	2501	7680	0	3062	8200	0	3136	10400	0	3869	12000	0	4000	12750	0	4092	14600	0	4237
	22	4150	0	2475	6250	0	2528	7600	0	3107	8100	0	3193	10310	0	3929	11940	0	4105	12870	0	4192	14540	0	4355
	24	4100	0	2501	6200	0	2554	7544	0	3151	8040	0	3249	10240	0	3989	11880	0	4210	12810	0	4300	14360	0	4476
1.8+4.2 +4.2+4.2	16	4300	0	2396	6400	0	2449	7798	0	2984	8330	0	3041	10560	0	3766	12110	0	3797	13030	0	3863	14730	0	3987
	18	4250	0	2423	6350	0	2475	7736	0	3028	8260	0	3096	10470	0	3826	12060	0	3921	12990	0	3974	14680	0	4110
	20	4200	0	2449	6300	0	2501	7680	0	3062	8200	0	3136	10400	0	3869	12000	0	4000	12750	0	4092	14600	0	4237
	22	4150	0	2475	6250	0	2528	7600	0	3107	8100	0	3193	10310	0	3929	11940	0	4105	12870	0	4192	14540	0	4355
	24	4100	0	2501	6200	0	2554	7544	0	3151	8040	0	3249	10240	0	3989	11880	0	4210	12810	0	4300	14360	0	4476

	INDOOR	OUTDOOR TEMPERATURE (°CDB)																							
	EDB	-15			-10			-7			-5			0			7			10			15		
	°C	TC	SHC	PI	TC	SHC	PI	TC	SHC	PI	TC	SHC	PI	TC	SHC	PI	TC	SHC	PI	TC	SHC	PI	TC	SHC	PI
1.8+4.2 +4.2+5.0	16	4300	0	2436	6400	0	2489	7798	0	3064	8330	0	3121	10560	0	3866	12110	0	3897	13030	0	3963	14730	0	4087
	18	4250	0	2463	6350	0	2515	7736	0	3108	8260	0	3176	10470	0	3926	12060	0	4021	12990	0	4074	14680	0	4210
	20	4200	0	2489	6300	0	2541	7680	0	3142	8200	0	3216	10400	0	3969	12000	0	4100	12750	0	4192	14600	0	4337
	22	4150	0	2515	6250	0	2568	7600	0	3187	8100	0	3273	10310	0	4029	11940	0	4205	12870	0	4292	14540	0	4455
	24	4100	0	2541	6200	0	2594	7544	0	3231	8040	0	3329	10240	0	4089	11880	0	4310	12810	0	4400	14360	0	4576
1.8+4.2 +4.2+6.0	16	4300	0	2436	6400	0	2489	7798	0	3064	8330	0	3121	10560	0	3866	12110	0	3897	13030	0	3963	14730	0	4087
	18	4250	0	2463	6350	0	2515	7736	0	3108	8260	0	3176	10470	0	3926	12060	0	4021	12990	0	4074	14680	0	4210
	20	4200	0	2489	6300	0	2541	7680	0	3142	8200	0	3216	10400	0	3969	12000	0	4100	12750	0	4192	14600	0	4337
	22	4150	0	2515	6250	0	2568	7600	0	3187	8100	0	3273	10310	0	4029	11940	0	4205	12870	0	4292	14540	0	4455
	24	4100	0	2541	6200	0	2594	7544	0	3231	8040	0	3329	10240	0	4089	11880	0	4310	12810	0	4400	14360	0	4576
1.8+4.2 +5.0+5.0	16	4300	0	2436	6400	0	2489	7798	0	3064	8330	0	3121	10560	0	3866	12110	0	3897	13030	0	3963	14730	0	4087
	18	4250	0	2463	6350	0	2515	7736	0	3108	8260	0	3176	10470	0	3926	12060	0	4021	12990	0	4074	14680	0	4210
	20	4200	0	2489	6300	0	2541	7680	0	3142	8200	0	3216	10400	0	3969	12000	0	4100	12750	0	4192	14600	0	4337
	22	4150	0	2515	6250	0	2568	7600	0	3187	8100	0	3273	10310	0	4029	11940	0	4205	12870	0	4292	14540	0	4455
	24	4100	0	2541	6200	0	2594	7544	0	3231	8040	0	3329	10240	0	4089	11880	0	4310	12810	0	4400	14360	0	4576
2.5+2.5 +2.5+2.5	16	4300	0	2138	6300	0	2192	7798	0	2419	8300	0	2478	10560	0	2910	19110	0	2942	13030	0	3010	14730	0	3137
	18	4250	0	2165	6250	0	2216	7736	0	2364	8260	0	2535	10470	0	2972	12060	0	3069	12990	0	3123	14680	0	3263
	20	4200	0	2192	6200	0	2246	7680	0	2499	8200	0	2575	10400	0	3015	12000	0	3158	12750	0	3245	14600	0	3393
	22	4250	0	2219	6150	0	2273	7600	0	2556	8100	0	2634	10310	0	3077	11940	0	3258	12870	0	3347	14540	0	3515
	24	4100	0	2246	6100	0	2300	7544	0	2591	8040	0	2691	10240	0	3139	11880	0	3366	12810	0	3458	14360	0	3639
2.5+2.5 +2.5+3.5	16	4300	0	2178	6300	0	2232	7798	0	2499	8300	0	2558	10560	0	3040	19110	0	3072	13030	0	3140	14730	0	3267
	18	4250	0	2205	6250	0	2256	7736	0	2444	8260	0	2615	10470	0	3102	12060	0	3199	12990	0	3253	14680	0	3393
	20	4200	0	2232	6200	0	2286	7680	0	2579	8200	0	2655	10400	0	3145	12000	0	3290	12750	0	3375	14600	0	3523
	22	4250	0	2259	6150	0	2313	7600	0	2636	8100	0	2714	10310	0	3207	11940	0	3388	12870	0	3477	14540	0	3645
	24	4100	0	2286	6100	0	2340	7544	0	2671	8040	0	2771	10240	0	3269	11880	0	3496	12810	0	3588	14360	0	3769
2.5+2.5 +2.5+4.2	16	4300	0	2328	6400	0	2382	7488	0	2799	8330	0	2858	10560	0	3450	12110	0	3482	13030	0	3550	14730	0	3677
	18	4250	0	2355	6350	0	2409	7426	0	2844	8260	0	2915	10470	0	3512	12060	0	3609	12990	0	3663	14680	0	3803
	20	4200	0	2382	6300	0	2436	7370	0	2879	8200	0	2955	10400	0	3555	12000	0	3690	12750	0	3785	14600	0	3933
	22	4150	0	2409	6250	0	2463	7290	0	2926	8100	0	3014	10310	0	3617	11940	0	3798	12870	0	3887	14540	0	4055
	24	4100	0	2436	6200	0	2490	7234	0	2971	8040	0	3071	10240	0	3679	11880	0	3906	12810	0	3998	14360	0	4179
2.5+2.5 +2.5+5.0	16	4300	0	2358	6400	0	2412	7488	0	2859	8330	0	2918	10560	0	3550	12110	0	3582	13030	0	3650	14730	0	3777
	18	4250	0	2385	6350	0	2439	7426	0	2904	8260	0	2975	10470	0	3612	12060	0	3709	12990	0	3763	14680	0	3903
	20	4200	0	2412	6300	0	2466	7370	0	2939	8200	0	3015	10400	0	3655	12000	0	3790	12750	0	3885	14600	0	4033
	22	4150	0	2439	6250	0	2493	7290	0	2986	8100	0	3074	10310	0	3717	11940	0	3898	12870	0	3987	14540	0	4155
	24	4100	0	2466	6200	0	2520	7234	0	3031	8040	0	3131	10240	0	3779	11880	0	4006	12810	0	4098	14360	0	4279
2.5+2.5 +2.5+6.0	16	4300	0	2358	6400	0	2412	7488	0	2859	8330	0	2918	10560	0	3550	12110	0	3582	13030	0	3650	14730	0	3777
	18	4250	0	2385	6350	0	2439	7426	0	2904	8260	0	2975	10470	0	3612	12060	0	3709	12990	0	3763	14680	0	3903
	20	4200	0	2412	6300	0	2466	7370	0	2939	8200	0	3015	10400	0	3655	12000	0	3790	12750	0	3885	14600	0	4033
	22	4150	0	2439	6250	0	2493	7290	0	2986	8100	0	3074	10310	0	3717	11940	0	3898	12870	0	3987	14540	0	4155
	24	4100	0	2466	6200	0	2520	7234	0	3031	8040	0	3131	10240	0	3779	11880	0	4006	12810	0	4098	14360	0	4279
2.5+2.5 +3.5+3.5	16	4300	0	2238	6400	0	2292	7798	0	2619	8330	0	2678	10560	0	3190	12110	0	3222	13030	0	3290	14730	0	3417
	18	4250	0	2265	6350	0	2319	7736	0	2664	8260	0	2735	10470	0	3252	12060	0	3349	12990	0	3403	14680	0	3543
	20	4200	0	2292	6300	0	2346	7680	0	2699	8200	0	2775	10400	0	3295	12000	0	3490	12750	0	3525	14600	0	3673
	22	4150	0	2319	6250	0	2373	7600	0	2746	8100	0	2834	10310	0	3357	11940	0	3538	12870	0	3627	14540	0	3795
	24	4100	0	2346	6200	0	2400	7544	0	2791	8040	0	2891	10240	0	3419	11880	0	3646	12810	0	3738	14360	0	3919
2.5+2.5 +3.5+4.2	16	4300	0	2358	6400	0	2412	7488	0	2859	8330	0	2918	10560	0	3550	12110	0	3582	13030	0	3650	14730	0	3777
	18	4250	0	2385	6350	0	2439	7426	0	2904	8260	0	2975	10470	0	3612	12060	0	3709	12990	0	3763	14680	0	3903
	20	4200	0	2412	6300	0	2466	7370	0	2939	8200	0	3015	10400	0	3655	12000	0	3790	12750	0	3885	14600	0	4033
	22	4150	0	2439	6250	0	2493	7290	0	2986	8100	0	3074	10310	0	3717	11940	0	3898	12870	0	3987	14540	0	4155
	24	4100	0	2466	6200	0	2520	7234	0	3031	8040	0	3131	10240	0	3779	11880	0	4006	12810	0	4098	14360	0	4279

	INDOOR	OUTDOOR TEMPERATURE (°CDB)																							
	EDB	-15			-10			-7			-5			0			7			10			15		
	°C	TC	SHC	PI	TC	SHC	PI	TC	SHC	PI	TC	SHC	PI	TC	SHC	PI	TC	SHC	PI	TC	SHC	PI	TC	SHC	PI
2.5+2.5 +3.5+5.0	16	4300	0	2398	6400	0	2452	7798	0	2939	8330	0	2998	10560	0	3760	12110	0	3792	13030	0	3860	14730	0	3987
	18	4250	0	2425	6350	0	2479	7736	0	2984	8260	0	3055	10470	0	3822	12060	0	3919	12990	0	3973	14680	0	4113
	20	4200	0	2452	6300	0	2506	7680	0	3019	8200	0	3095	10400	0	3865	12000	0	4000	12750	0	4095	14600	0	4243
	22	4150	0	2479	6250	0	2533	7600	0	3066	8100	0	3154	10310	0	3927	11940	0	4108	12870	0	4197	14540	0	4365
	24	4100	0	2506	6200	0	2560	7544	0	3111	8040	0	3211	10240	0	3989	11880	0	4216	12810	0	4308	14360	0	4489
2.5+2.5 +3.5+6.0	16	4300	0	2398	6400	0	2452	7798	0	2939	8330	0	2998	10560	0	3760	12110	0	3792	13030	0	3860	14730	0	3987
	18	4250	0	2425	6350	0	2479	7736	0	2984	8260	0	3055	10470	0	3822	12060	0	3919	12990	0	3973	14680	0	4113
	20	4200	0	2452	6300	0	2506	7680	0	3019	8200	0	3095	10400	0	3865	12000	0	4000	12750	0	4095	14600	0	4243
	22	4150	0	2479	6250	0	2533	7600	0	3066	8100	0	3154	10310	0	3927	11940	0	4108	12870	0	4197	14540	0	4365
	24	4100	0	2506	6200	0	2560	7544	0	3111	8040	0	3211	10240	0	3989	11880	0	4216	12810	0	4308	14360	0	4489
2.5+2.5 +4.2+4.2	16	4300	0	2398	6400	0	2452	7798	0	2939	8330	0	2998	10560	0	3760	12110	0	3792	13030	0	3860	14730	0	3987
	18	4250	0	2425	6350	0	2479	7736	0	2984	8260	0	3055	10470	0	3822	12060	0	3919	12990	0	3973	14680	0	4113
	20	4200	0	2452	6300	0	2506	7680	0	3019	8200	0	3095	10400	0	3865	12000	0	4000	12750	0	4095	14600	0	4243
	22	4150	0	2479	6250	0	2533	7600	0	3066	8100	0	3154	10310	0	3927	11940	0	4108	12870	0	4197	14540	0	4365
	24	4100	0	2506	6200	0	2560	7544	0	3111	8040	0	3211	10240	0	3989	11880	0	4216	12810	0	4308	14360	0	4489
2.5+2.5 +4.2+5.0	16	4300	0	2398	6400	0	2452	7798	0	2939	8330	0	2998	10560	0	3760	12110	0	3792	13030	0	3860	14730	0	3987
	18	4250	0	2425	6350	0	2479	7736	0	2984	8260	0	3055	10470	0	3822	12060	0	3919	12990	0	3973	14680	0	4113
	20	4200	0	2452	6300	0	2506	7680	0	3019	8200	0	3095	10400	0	3865	12000	0	4000	12750	0	4095	14600	0	4243
	22	4150	0	2479	6250	0	2533	7600	0	3066	8100	0	3154	10310	0	3927	11940	0	4108	12870	0	4197	14540	0	4365
	24	4100	0	2506	6200	0	2560	7544	0	3111	8040	0	3211	10240	0	3989	11880	0	4216	12810	0	4308	14360	0	4489
2.5+2.5 +4.2+6.0	16	4300	0	2498	6400	0	2552	7798	0	3139	8330	0	3198	10560	0	3960	12110	0	3992	13030	0	4060	14730	0	4187
	18	4250	0	2525	6350	0	2579	7736	0	3184	8260	0	3255	10470	0	4022	12060	0	4119	12990	0	4173	14680	0	4313
	20	4200	0	2552	6300	0	2606	7680	0	3219	8200	0	3295	10400	0	4065	12000	0	4200	12750	0	4295	14600	0	4443
	22	4150	0	2579	6250	0	2633	7600	0	3266	8100	0	3354	10310	0	4127	11940	0	4308	12870	0	4397	14540	0	4565
	24	4100	0	2606	6200	0	2660	7544	0	3311	8040	0	3411	10240	0	4189	11880	0	4416	12810	0	4508	14360	0	4689
2.5+2.5 +5.0+5.0	16	4300	0	2466	6400	0	2519	7798	0	3124	8330	0	3181	10560	0	3966	12110	0	3997	13030	0	4063	14730	0	4187
	18	4250	0	2493	6350	0	2545	7736	0	3168	6960	0	3236	10470	0	4026	12060	0	4121	12990	0	4174	14680	0	4310
	20	4200	0	2519	6300	0	2571	7680	0	3202	6900	0	3276	10400	0	4069	12000	0	4200	12750	0	4292	14600	0	4437
	22	4150	0	2545	6250	0	2598	7600	0	3247	6800	0	3333	10310	0	4129	11940	0	4305	12870	0	4392	14540	0	4555
	24	4100	0	2571	6200	0	2624	7544	0	3291	6740	0	3389	10240	0	4189	11880	0	4410	12810	0	4500	14360	0	4676
2.5+2.5 +5.0+6.0	16	4300	0	2466	6400	0	2519	7798	0	3124	8330	0	3181	10560	0	3966	12110	0	3997	13030	0	4063	14730	0	4187
	18	4250	0	2493	6350	0	2545	7736	0	3168	6960	0	3236	10470	0	4026	12060	0	4121	12990	0	4174	14680	0	4310
	20	4200	0	2519	6300	0	2571	7680	0	3202	6900	0	3276	10400	0	4069	12000	0	4200	12750	0	4292	14600	0	4437
	22	4150	0	2545	6250	0	2598	7600	0	3247	6800	0	3333	10310	0	4129	11940	0	4305	12870	0	4392	14540	0	4555
	24	4100	0	2571	6200	0	2624	7544	0	3291	6740	0	3389	10240	0	4189	11880	0	4410	12810	0	4500	14360	0	4676
2.5+3.5 +3.5+3.5	16	4300	0	2388	6400	0	2442	7488	0	2919	8330	0	2978	10560	0	3650	12110	0	3682	13030	0	3750	14730	0	3877
	18	4250	0	2415	6350	0	2469	7426	0	2964	8260	0	3035	10470	0	3712	12060	0	3809	12990	0	3863	14680	0	4003
	20	4200	0	2442	6300	0	2496	7370	0	2999	8200	0	3075	10400	0	3755	12000	0	3890	12750	0	3985	14600	0	4133
	22	4150	0	2469	6250	0	2523	7290	0	3046	8100	0	3134	10310	0	3817	11940	0	3998	12870	0	4087	14540	0	4255
	24	4100	0	2496	6200	0	2550	7234	0	3091	8040	0	3191	10240	0	3879	11880	0	4106	12810	0	4198	14360	0	4379
2.5+3.5 +3.5+4.2	16	4300	0	2498	6400	0	2552	7798	0	3139	8330	0	3198	10560	0	3960	12110	0	3992	13030	0	4060	14730	0	4187
	18	4250	0	2525	6350	0	2579	7736	0	3184	8260	0	3255	10470	0	4022	12060	0	4119	12990	0	4173	14680	0	4313
	20	4200	0	2552	6300	0	2606	7680	0	3219	8200	0	3295	10400	0	4065	12000	0	4200	12750	0	4295	14600	0	4443
	22	4150	0	2579	6250	0	2633	7600	0	3266	8100	0	3354	10310	0	4127	11940	0	4308	12870	0	4397	14540	0	4565
	24	4100	0	2606	6200	0	2660	7544	0	3311	8040	0	3411	10240	0	4189	11880	0	4416	12810	0	4508	14360	0	4689

	INDOOR	OUTDOOR TEMPERATURE (°CDB)																							
	EDB	-15			-10			-7			-5			0			7			10			15		
	°C	TC	SHC	PI	TC	SHC	PI	TC	SHC	PI	TC	SHC	PI	TC	SHC	PI	TC	SHC	PI	TC	SHC	PI	TC	SHC	PI
2.5+3.5 +3.5+5.0	16	4300	0	2466	6400	0	2519	7798	0	3124	8330	0	3181	10560	0	3966	12110	0	3997	13030	0	4063	14730	0	4187
	18	4250	0	2493	6350	0	2545	7736	0	3168	6960	0	3236	10470	0	4026	12060	0	4121	12990	0	4174	14680	0	4310
	20	4200	0	2519	6300	0	2571	7680	0	3202	6900	0	3276	10400	0	4069	12000	0	4200	12750	0	4292	14600	0	4437
	22	4150	0	2545	6250	0	2598	7600	0	3247	6800	0	3333	10310	0	4129	11940	0	4305	12870	0	4392	14540	0	4555
	24	4100	0	2571	6200	0	2624	7544	0	3291	6740	0	3389	10240	0	4189	11880	0	4410	12810	0	4500	14360	0	4676
2.5+3.5 +3.5+6.0	16	4300	0	2466	6400	0	2519	7798	0	3124	8330	0	3181	10560	0	3966	12110	0	3997	13030	0	4063	14730	0	4187
	18	4250	0	2493	6350	0	2545	7736	0	3168	6960	0	3236	10470	0	4026	12060	0	4121	12990	0	4174	14680	0	4310
	20	4200	0	2519	6300	0	2571	7680	0	3202	6900	0	3276	10400	0	4069	12000	0	4200	12750	0	4292	14600	0	4437
	22	4150	0	2545	6250	0	2598	7600	0	3247	6800	0	3333	10310	0	4129	11940	0	4305	12870	0	4392	14540	0	4555
	24	4100	0	2571	6200	0	2624	7544	0	3291	6740	0	3389	10240	0	4189	11880	0	4410	12810	0	4500	14360	0	4676
2.5+3.5 +4.2+4.2	16	4300	0	2498	6400	0	2552	7798	0	3139	8330	0	3198	10560	0	3860	12110	0	3892	13030	0	3960	14730	0	4087
	18	4250	0	2525	6350	0	2579	7736	0	3184	8260	0	3255	10470	0	3922	12060	0	4019	12990	0	4073	14680	0	4213
	20	4200	0	2552	6300	0	2606	7680	0	3219	8200	0	3295	10400	0	3965	12000	0	4100	12750	0	4195	14600	0	4343
	22	4150	0	2579	6250	0	2633	7600	0	3266	8100	0	3354	10310	0	4027	11940	0	4208	12870	0	4297	14540	0	4465
	24	4100	0	2606	6200	0	2660	7544	0	3311	8040	0	3411	10240	0	4089	11880	0	4316	12810	0	4408	14360	0	4589
2.5+3.5 +4.2+5.0	16	4300	0	2498	6400	0	2552	7798	0	3139	8330	0	3198	10560	0	3960	12110	0	3992	13030	0	4060	14730	0	4187
	18	4250	0	2525	6350	0	2579	7736	0	3184	8260	0	3255	10470	0	4022	12060	0	4119	12990	0	4173	14680	0	4313
	20	4200	0	2552	6300	0	2606	7680	0	3219	8200	0	3295	10400	0	4065	12000	0	4200	12750	0	4295	14600	0	4443
	22	4150	0	2579	6250	0	2633	7600	0	3266	8100	0	3354	10310	0	4127	11940	0	4308	12870	0	4397	14540	0	4565
	24	4100	0	2606	6200	0	2660	7544	0	3311	8040	0	3411	10240	0	4189	11880	0	4416	12810	0	4508	14360	0	4689
2.5+3.5 +4.2+6.0	16	4300	0	2498	6400	0	2552	7798	0	3139	8330	0	3198	10560	0	3960	12110	0	3992	13030	0	4060	14730	0	4187
	18	4250	0	2525	6350	0	2579	7736	0	3184	8260	0	3255	10470	0	4022	12060	0	4119	12990	0	4173	14680	0	4313
	20	4200	0	2552	6300	0	2606	7680	0	3219	8200	0	3295	10400	0	4065	12000	0	4200	12750	0	4295	14600	0	4443
	22	4150	0	2579	6250	0	2633	7600	0	3266	8100	0	3354	10310	0	4127	11940	0	4308	12870	0	4397	14540	0	4565
	24	4100	0	2606	6200	0	2660	7544	0	3311	8040	0	3411	10240	0	4189	11880	0	4416	12810	0	4508	14360	0	4689
2.5+3.5 +5.0+5.0	16	4300	0	2466	6400	0	2519	7798	0	3124	8330	0	3181	10560	0	3966	12110	0	3997	13030	0	4063	14730	0	4187
	18	4250	0	2493	6350	0	2545	7736	0	3168	6960	0	3236	10470	0	4026	12060	0	4121	12990	0	4174	14680	0	4310
	20	4200	0	2519	6300	0	2571	7680	0	3202	6900	0	3276	10400	0	4069	12000	0	4200	12750	0	4292	14600	0	4437
	22	4150	0	2545	6250	0	2598	7600	0	3247	6800	0	3333	10310	0	4129	11940	0	4305	12870	0	4392	14540	0	4555
	24	4100	0	2571	6200	0	2624	7544	0	3291	6740	0	3389	10240	0	4189	11880	0	4410	12810	0	4500	14360	0	4676
3.5+3.5 +3.5+3.5	16	4300	0	2466	6400	0	2519	7798	0	3124	8330	0	3181	10560	0	3966	12110	0	3997	13030	0	4063	14730	0	4187
	18	4250	0	2493	6350	0	2545	7736	0	3168	6960	0	3236	10470	0	4026	12060	0	4121	12990	0	4174	14680	0	4310
	20	4200	0	2519	6300	0	2571	7680	0	3202	6900	0	3276	10400	0	4069	12000	0	4200	12750	0	4292	14600	0	4437
	22	4150	0	2545	6250	0	2598	7600	0	3247	6800	0	3333	10310	0	4129	11940	0	4305	12870	0	4392	14540	0	4555
	24	4100	0	2571	6200	0	2624	7544	0	3291	6740	0	3389	10240	0	4189	11880	0	4410	12810	0	4500	14360	0	4676
3.5+3.5 +3.5+4.2	16	4300	0	2496	6400	0	2549	7798	0	3184	8330	0	3241	10560	0	4066	12110	0	4097	13030	0	4163	14730	0	4287
	18	4250	0	2523	6350	0	2575	7736	0	3228	6960	0	3296	10470	0	4126	12060	0	4221	12990	0	4274	14680	0	4410
	20	4200	0	2549	6300	0	2601	7680	0	3262	6900	0	3336	10400	0	4169	12000	0	4300	12750	0	4392	14600	0	4537
	22	4150	0	2575	6250	0	2628	7600	0	3307	6800	0	3393	10310	0	4229	11940	0	4405	12870	0	4492	14540	0	4655
	24	4100	0	2061	6200	0	2654	7544	0	3351	6740	0	3449	10240	0	4289	11880	0	4510	12810	0	4600	14360	0	4776
3.5+3.5 +3.5+5.0	16	4300	0	2566	6400	0	2619	7798	0	3324	8330	0	3381	10560	0	4266	12110	0	4297	13030	0	4363	14730	0	4487
	18	4250	0	2593	6350	0	2645	7736	0	3368	6960	0	3436	10470	0	4326	12060	0	4421	12990	0	4474	14680	0	4610
	20	4200	0	2619	6300	0	2671	7680	0	3402	6900	0	3476	10400	0	4369	12000	0	4500	12750	0	4592	14600	0	4737
	22	4150	0	2645	6250	0	2698	7600	0	3447	6800	0	3533	10310	0	4429	11940	0	4605	12870	0	4692	14540	0	4855
	24	4100	0	2671	6200	0	2724	7544	0	3491	6740	0	3589	10240	0	4489	11880	0	4710	12810	0	4800	14360	0	4976

	INDOOR	OUTDOOR TEMPERATURE (°CDB)																							
	EDB	-15			-10			-7			-5			0			7			10			15		
	°C	TC	SHC	PI	TC	SHC	PI	TC	SHC	PI	TC	SHC	PI	TC	SHC	PI	TC	SHC	PI	TC	SHC	PI	TC	SHC	PI
3.5+3.5 +4.2+4.2	16	4300	0	2566	6400	0	2619	7798	0	3324	8330	0	3381	10560	0	4266	12110	0	4297	13030	0	4363	14730	0	4487
	18	4250	0	2593	6350	0	2645	7736	0	3368	6960	0	3436	10470	0	4326	12060	0	4421	12990	0	4474	14680	0	4610
	20	4200	0	2619	6300	0	2671	7680	0	3402	6900	0	3476	10400	0	4369	12000	0	4500	12750	0	4592	14600	0	4737
	22	4150	0	2645	6250	0	2698	7600	0	3447	6800	0	3533	10310	0	4429	11940	0	4605	12870	0	4692	14540	0	4855
	24	4100	0	2671	6200	0	2724	7544	0	3491	6740	0	3589	10240	0	4489	11880	0	4710	12810	0	4800	14360	0	4976
3.5+3.5 +3.6+6.0	16	4300	0	2566	6400	0	2619	7798	0	3324	8330	0	3381	10560	0	4266	12110	0	4297	13030	0	4363	14730	0	4487
	18	4250	0	2593	6350	0	2645	7736	0	3368	6960	0	3436	10470	0	4326	12060	0	4421	12990	0	4474	14680	0	4610
	20	4200	0	2619	6300	0	2671	7680	0	3402	6900	0	3476	10400	0	4369	12000	0	4500	12750	0	4592	14600	0	4737
	22	4150	0	2645	6250	0	2698	7600	0	3447	6800	0	3533	10310	0	4429	11940	0	4605	12870	0	4692	14540	0	4855
	24	4100	0	2671	6200	0	2724	7544	0	3491	6740	0	3589	10240	0	4489	11880	0	4710	12810	0	4800	14360	0	4976
3.5+3.5 +4.2+5.0	16	4300	0	2566	6400	0	2619	7798	0	3324	8330	0	3381	10560	0	4266	12110	0	4297	13030	0	4363	14730	0	4487
	18	4250	0	2593	6350	0	2645	7736	0	3368	6960	0	3436	10470	0	4326	12060	0	4421	12990	0	4474	14680	0	4610
	20	4200	0	2619	6300	0	2671	7680	0	3402	6900	0	3476	10400	0	4369	12000	0	4500	12750	0	4592	14600	0	4737
	22	4150	0	2645	6250	0	2698	7600	0	3447	6800	0	3533	10310	0	4429	11940	0	4605	12870	0	4692	14540	0	4855
	24	4100	0	2671	6200	0	2724	7544	0	3491	6740	0	3589	10240	0	4489	11880	0	4710	12810	0	4800	14360	0	4976
1.5+1.5 +1.5+1.5+1 .5	16	3600	0	1739	5700	0	1786	6498	0	1862	7030	0	1913	8560	0	2141	10110	0	2169	11030	0	2228	12730	0	2338
	18	3550	0	1763	5650	0	1810	6436	0	1901	6960	0	1962	8470	0	2195	10060	0	2280	10990	0	2327	12680	0	2449
	20	3500	0	1786	5600	0	1833	6380	0	1932	6900	0	1998	8400	0	2233	10000	0	2350	10750	0	2432	12600	0	2562
	22	3450	0	1810	5550	0	1857	6300	0	1972	6800	0	2049	8310	0	2287	9940	0	2444	10870	0	2522	12540	0	2667
	24	3400	0	1833	5500	0	1880	6244	0	2011	6740	0	2099	8240	0	2341	9880	0	2538	10810	0	2618	12360	0	2775
1.5+1.5 +1.5+1.5+1 .8	16	3780	0	1926	5880	0	1824	6838	0	1930	7370	0	1981	9060	0	2240	10610	0	2268	11530	0	2327	13230	0	2438
	18	3730	0	1950	5830	0	1847	6776	0	1969	7300	0	2031	8970	0	2294	10560	0	2379	11490	0	2426	13180	0	2549
	20	3680	0	1974	5780	0	1871	6720	0	2000	7240	0	2066	8900	0	2332	10500	0	2450	11250	0	2533	13100	0	2662
	22	3630	0	1997	5730	0	1894	6640	0	2041	7140	0	2118	8810	0	2386	10440	0	2544	11370	0	2622	13040	0	2769
	24	3580	0	2021	5680	0	1918	6584	0	2080	7080	0	2167	8740	0	2441	10380	0	2639	11310	0	2719	12860	0	2877
1.5+1.5 +1.5+1.5+2 .5	16	4100	0	1826	6200	0	1874	7498	0	2002	8030	0	2054	9960	0	2336	11510	0	2365	12430	0	2425	14130	0	2538
	18	4050	0	1850	6150	0	1898	6436	0	2042	7960	0	2104	9870	0	2392	11460	0	2478	12390	0	2526	14080	0	2651
	20	4000	0	1874	6100	0	1922	6380	0	2073	7900	0	2140	9800	0	2430	11400	0	2550	12150	0	2634	14000	0	2766
	22	3950	0	1898	6050	0	1946	6300	0	2114	7800	0	2193	9710	0	2485	11340	0	2646	12270	0	2725	13940	0	2874
	24	3900	0	1922	6000	0	1970	6244	0	2154	7740	0	2243	9640	0	2540	11280	0	2742	12210	0	2824	13760	0	2984
1.5+1.5 +1.5+1.5+3 .5	16	4300	0	1950	6400	0	2000	7798	0	2209	8330	0	2262	10560	0	2631	12110	0	2661	13030	0	2722	14730	0	2838
	18	4250	0	1975	6350	0	2024	7736	0	2250	8260	0	2314	10470	0	2688	12060	0	2776	12990	0	2825	14680	0	2953
	20	4200	0	2000	6300	0	2049	7680	0	2282	8200	0	2351	10400	0	2727	12000	0	2850	12750	0	2936	14600	0	3071
	22	4150	0	2024	6250	0	2073	7600	0	2324	8100	0	2405	10310	0	2784	11940	0	2948	12870	0	3030	14540	0	3182
	24	4100	0	2049	6200	0	2098	7544	0	2365	8040	0	2457	10240	0	2840	11880	0	3047	12810	0	3130	14360	0	3295
1.5+1.5 +1.5+1.5+4 .2	16	4300	0	1980	6400	0	2030	7798	0	2269	8330	0	2322	10560	0	2731	12110	0	2761	13030	0	2822	14730	0	2938
	18	4250	0	2005	6350	0	2054	7736	0	2310	8260	0	2374	10470	0	2788	12060	0	2876	12990	0	2925	14680	0	3053
	20	4200	0	2030	6300	0	2079	7680	0	2342	8200	0	2411	10400	0	2827	12000	0	2950	12750	0	3036	14600	0	3171
	22	4150	0	2054	6250	0	2103	7600	0	2384	8100	0	2465	10310	0	2884	11940	0	3048	12870	0	3130	14540	0	3282
	24	4100	0	2079	6200	0	2128	7544	0	2425	8040	0	2517	10240	0	2940	11880	0	3147	12810	0	3230	14360	0	3395
1.5+1.5 +1.5+1.5+5 .0	16	4300	0	2100	6400	0	2150	7798	0	2509	8330	0	2562	10560	0	3071	12110	0	3101	13030	0	3162	14730	0	3278
	18	4250	0	2125	6350	0	2174	7736	0	2550	8260	0	2614	10470	0	3128	12060	0	3216	12990	0	3265	14680	0	3393
	20	4200	0	2150	6300	0	2199	7680	0	2582	8200	0	2651	10400	0	3167	12000	0	3290	12750	0	3376	14600	0	3511
	22	4150	0	2174	6250	0	2223	7600	0	2624	8100	0	2705	10310	0	3224	11940	0	3388	12870	0	3470	14540	0	3622
	24	4100	0	2199	6200	0	2248	7544	0	2665	8040	0	2757	10240	0	3280	11880	0	3487	12810	0	3570	14360	0	3735
1.5+1.5 +1.5+1.5+6 .0	16	4300	0	2100	6400	0	2150	7798	0	2509	8330	0	2562	10560	0	3071	12110	0	3101	13030	0	3162	14730	0	3278
	18	4250	0	2125	6350	0	2174	7736	0	2550	8260	0	2614	10470	0	3128	12060	0	3216	12990	0	3265	14680	0	3393
	20	4200	0	2150	6300	0	2199	7680	0	2582	8200	0	2651	10400	0	3167	12000	0	3290	12750	0	3376	14600	0	3511
	22	4150	0	2174	6250	0	2223	7600	0	2624	8100	0	2705	10310	0	3224	11940	0	3388	12870	0	3470	14540	0	3622
	24	4100	0	2199	6200	0	2248	7544	0	2665	8040	0	2757	10240	0	3280	11880	0	3487	12810	0	3570	14360	0	3735

	INDOOR	OUTDOOR TEMPERATURE (°CDB)																							
	EDB	-15			-10			-7			-5			0			7			10			15		
	°C	TC	SHC	PI	TC	SHC	PI	TC	SHC	PI	TC	SHC	PI	TC	SHC	PI	TC	SHC	PI	TC	SHC	PI	TC	SHC	PI
1.5+1.5 +1.5+1.8+1.8	16	4000	0	1820	6100	0	1870	7198	0	1949	7730	0	2002	9560	0	2241	11110	0	2271	12030	0	2332	13730	0	2448
	18	3950	0	1845	6050	0	1894	7136	0	1990	7660	0	2054	9470	0	2298	11060	0	2386	11990	0	2435	13680	0	2563
	20	3900	0	1870	6000	0	1919	7180	0	2022	7600	0	2091	9400	0	2337	11000	0	2480	11750	0	2546	13600	0	2681
	22	3850	0	1894	5950	0	1943	7100	0	2064	7500	0	2145	9310	0	2394	10040	0	2558	11870	0	2640	13540	0	2792
	24	3800	0	1919	5900	0	1968	6944	0	2105	7440	0	2197	9240	0	2450	10880	0	2657	11810	0	2740	13360	0	2905
1.5+1.5 +1.5+1.8+2.5	16	4300	0	1860	6400	0	1910	7798	0	2029	8330	0	2082	10460	0	2361	12010	0	2391	12930	0	2452	14630	0	2568
	18	4250	0	1885	5650	0	1894	7736	0	2070	8260	0	2134	10370	0	2418	11960	0	2506	12890	0	2555	14580	0	2683
	20	4200	0	1910	5600	0	1919	7680	0	2102	8200	0	2171	10300	0	2457	11900	0	2580	12650	0	2666	14500	0	2801
	22	4150	0	1934	5550	0	1943	7600	0	2144	8100	0	2225	10210	0	2514	11840	0	2678	12770	0	2760	14440	0	2912
	24	4100	0	1959	5500	0	1968	7544	0	2185	8040	0	2277	10140	0	2570	11780	0	2777	12710	0	2860	14260	0	3025
1.5+1.5 +1.5+1.8+3.5	16	4300	0	1950	6400	0	2000	7798	0	2209	8330	0	2262	10560	0	2631	12110	0	2661	13030	0	2722	14730	0	2838
	18	4250	0	1975	6350	0	2024	7736	0	2250	8260	0	2314	10470	0	2688	12060	0	2776	12990	0	2825	14680	0	2953
	20	4200	0	2000	6300	0	2049	7680	0	2282	8200	0	2351	10400	0	2727	12000	0	2780	12750	0	2936	14600	0	3071
	22	4150	0	2024	6250	0	2073	7600	0	2324	8100	0	2405	10310	0	2784	11940	0	2948	12870	0	3030	14540	0	3182
	24	4100	0	2049	6200	0	2098	7544	0	2365	8040	0	2457	10240	0	2840	11880	0	3047	12810	0	3130	14360	0	3295
1.5+1.5 +1.5+1.8+4.2	16	4300	0	1950	6400	0	2000	7798	0	2209	8330	0	2262	10560	0	2631	12110	0	2661	13030	0	2722	14730	0	2838
	18	4250	0	1975	6350	0	2024	7736	0	2250	8260	0	2314	10470	0	2688	12060	0	2776	12990	0	2825	14680	0	2953
	20	4200	0	2000	6300	0	2049	7680	0	2282	8200	0	2351	10400	0	2727	12000	0	2780	12750	0	2936	14600	0	3071
	22	4150	0	2024	6250	0	2073	7600	0	2324	8100	0	2405	10310	0	2784	11940	0	2948	12870	0	3030	14540	0	3182
	24	4100	0	2049	6200	0	2098	7544	0	2365	8040	0	2457	10240	0	2840	11880	0	3047	12810	0	3130	14360	0	3295
1.5+1.5 +1.5+1.8+5.0	16	4300	0	2160	6400	0	2210	7798	0	2629	8330	0	2682	10560	0	3271	12110	0	3301	13030	0	3362	14730	0	3478
	18	4250	0	2185	6350	0	2234	6436	0	2670	8260	0	2734	10470	0	3328	12060	0	3416	12990	0	3465	14680	0	3593
	20	4200	0	2210	6300	0	2259	6380	0	2702	8200	0	2771	10400	0	3367	12000	0	3490	12750	0	3576	14600	0	3711
	22	4150	0	2234	6250	0	2283	6300	0	2744	8100	0	2825	10310	0	3424	11940	0	3588	12870	0	3670	14540	0	3822
	24	4100	0	2259	6200	0	2308	6244	0	2785	8040	0	2877	10240	0	3480	11880	0	3687	12810	0	3770	14360	0	3935
1.5+1.5 +1.5+1.8+6.0	16	4300	0	2160	6400	0	2210	7798	0	2629	8330	0	2682	10560	0	3271	12110	0	3301	13030	0	3362	14730	0	3478
	18	4250	0	2185	6350	0	2234	6436	0	2670	8260	0	2734	10470	0	3328	12060	0	3416	12990	0	3465	14680	0	3593
	20	4200	0	2210	6300	0	2259	6380	0	2702	8200	0	2771	10400	0	3367	12000	0	3490	12750	0	3576	14600	0	3711
	22	4150	0	2234	6250	0	2283	6300	0	2744	8100	0	2825	10310	0	3424	11940	0	3588	12870	0	3670	14540	0	3822
	24	4100	0	2259	6200	0	2309	6244	0	2785	8040	0	2877	10240	0	3480	11880	0	3687	12810	0	3770	14360	0	3935
1.5+1.5 +1.5+2.5+2.5	16	4300	0	1900	6400	0	1950	7798	0	2099	8330	0	2152	10560	0	2461	12110	0	2491	13030	0	2552	14730	0	2668
	18	4250	0	1925	6350	0	1974	7136	0	2140	8260	0	2204	10470	0	2518	12060	0	2606	12990	0	2655	14680	0	2783
	20	4200	0	1950	6300	0	1999	7080	0	2172	8200	0	2241	10400	0	2557	12000	0	2680	12750	0	2766	14600	0	2901
	22	4150	0	1974	6250	0	2023	7000	0	2214	8100	0	2295	10310	0	2614	11940	0	2778	12870	0	2860	14540	0	3012
	24	4100	0	1999	6200	0	2048	6944	0	2255	8040	0	2347	10240	0	2670	11880	0	2877	12810	0	2960	14360	0	3125
1.5+1.5 +1.5+2.5+3.5	16	4300	0	1980	6400	0	2030	7798	0	2269	8330	0	2322	10560	0	2731	12110	0	2761	13030	0	2822	14730	0	2938
	18	4250	0	2005	6350	0	2054	7736	0	2310	8260	0	2374	10470	0	2788	12060	0	2876	12990	0	2925	14680	0	3053
	20	4200	0	2030	6300	0	2079	7680	0	2342	8200	0	2411	10400	0	2827	12000	0	2980	12750	0	3036	14600	0	3171
	22	4150	0	2054	6250	0	2103	7600	0	2384	8100	0	2465	10310	0	2884	11940	0	3048	12870	0	3130	14540	0	3282
	24	4100	0	2079	6200	0	2128	7544	0	2425	8040	0	2517	10240	0	2940	11880	0	3147	12810	0	3230	14360	0	3395

	INDOOR	OUTDOOR TEMPERATURE (°CDB)																							
	EDB	-15			-10			-7			-5			0			7			10			15		
	°C	TC	SHC	PI	TC	SHC	PI	TC	SHC	PI	TC	SHC	PI	TC	SHC	PI	TC	SHC	PI	TC	SHC	PI	TC	SHC	PI
1.5+1.5 +1.5+2.5+4.2	16	4300	0	1980	6400	0	2030	7798	0	2269	8330	0	2322	10560	0	2731	12110	0	2761	13030	0	2822	14730	0	2938
	18	4250	0	2005	6350	0	2054	7736	0	2310	8260	0	2374	10470	0	2788	12060	0	2876	12990	0	2925	14680	0	3053
	20	4200	0	2030	6300	0	2079	7680	0	2342	8200	0	2411	10400	0	2827	12000	0	2980	12750	0	3036	14600	0	3171
	22	4150	0	2054	6250	0	2103	7600	0	2384	8100	0	2465	10310	0	2884	11940	0	3048	12870	0	3130	14540	0	3282
	24	4100	0	2079	6200	0	2128	7544	0	2425	8040	0	2517	10240	0	2940	11880	0	3147	12810	0	3230	14360	0	3395
1.5+1.5 +1.5+2.5+5.0	16	4300	0	2190	6400	0	2240	7798	0	2689	8330	0	2742	10560	0	3371	12110	0	3401	13030	0	3462	14730	0	3578
	18	4250	0	2215	6350	0	2264	6436	0	2730	8260	0	2794	10470	0	3428	12060	0	3516	12990	0	3565	14680	0	3693
	20	4200	0	2240	6300	0	2289	6380	0	2762	8200	0	2831	10400	0	3467	12000	0	3590	12750	0	3676	14600	0	3811
	22	4150	0	2264	6250	0	2313	6300	0	2804	8100	0	2885	10310	0	3524	11940	0	3688	12870	0	3770	14540	0	3922
	24	4100	0	2289	6200	0	2339	6244	0	2845	8040	0	2937	10240	0	3580	11880	0	3787	12810	0	3870	14360	0	4035
1.5+1.5 +1.5+2.5+6.0	16	4300	0	2190	6400	0	2240	7798	0	2689	8330	0	2742	10560	0	3371	12110	0	3401	13030	0	3462	14730	0	3578
	18	4250	0	2215	6350	0	2264	6436	0	2730	8260	0	2794	10470	0	3428	12060	0	3516	12990	0	3565	14680	0	3693
	20	4200	0	2240	6300	0	2289	6380	0	2762	8200	0	2831	10400	0	3467	12000	0	3590	12750	0	3676	14600	0	3811
	22	4150	0	2264	6250	0	2313	6300	0	2804	8100	0	2885	10310	0	3524	11940	0	3688	12870	0	3770	14540	0	3922
	24	4100	0	2289	6200	0	2339	6244	0	2845	8040	0	2937	10240	0	3580	11880	0	3787	12810	0	3870	14360	0	4035
1.5+1.5 +1.5+3.5+3.5	16	4300	0	1980	6400	0	2030	7798	0	2269	8330	0	2322	10560	0	2731	12110	0	2761	13030	0	2822	14730	0	2938
	18	4250	0	2005	6350	0	2054	7736	0	2310	8260	0	2374	10470	0	2788	12060	0	2876	12990	0	2925	14680	0	3053
	20	4200	0	2030	6300	0	2079	7680	0	2342	8200	0	2411	10400	0	2827	12000	0	2980	12750	0	3036	14600	0	3171
	22	4150	0	2054	6250	0	2103	7600	0	2384	8100	0	2465	10310	0	2884	11940	0	3048	12870	0	3130	14540	0	3282
	24	4100	0	2079	6200	0	2128	7544	0	2425	8040	0	2517	10240	0	2940	11880	0	3147	12810	0	3230	14360	0	3395
1.5+1.5 +1.5+3.5+4.2	16	4300	0	2100	6400	0	2150	7798	0	2509	8330	0	2562	10560	0	3071	12110	0	3101	13030	0	3162	14730	0	3278
	18	4250	0	2125	6350	0	2174	7736	0	2550	8260	0	2614	10470	0	3128	12060	0	3216	12990	0	3265	14680	0	3393
	20	4200	0	2150	6300	0	2199	7680	0	2582	8200	0	2651	10400	0	3167	12000	0	3290	12750	0	3376	14600	0	3511
	22	4150	0	2174	6250	0	2223	7600	0	2624	8100	0	2705	10310	0	3224	11940	0	3388	12870	0	3470	14540	0	3622
	24	4100	0	2199	6200	0	2248	7544	0	2665	8040	0	2757	10240	0	3280	11880	0	3487	12810	0	3570	14360	0	3735
1.5+1.5 +1.5+3.5+5.0	16	4300	0	2220	6400	0	2270	7798	0	2749	8330	0	2802	10560	0	3471	12110	0	3501	13030	0	3562	14730	0	3678
	18	4250	0	2245	6350	0	2294	6436	0	2790	8260	0	2854	10470	0	3528	12060	0	3616	12990	0	3665	14680	0	3793
	20	4200	0	2270	6300	0	2319	6380	0	2822	8200	0	2891	10400	0	3567	12000	0	3690	12750	0	3776	14600	0	3911
	22	4150	0	2294	6250	0	2343	6300	0	2864	8100	0	2945	10310	0	3624	11940	0	3788	12870	0	3870	14540	0	4022
	24	4100	0	2319	6200	0	2369	6244	0	2905	8040	0	2997	10240	0	3680	11880	0	3887	12810	0	3970	14360	0	4135
1.5+1.5 +1.5+3.5+6.0	16	4300	0	2220	6400	0	2270	7798	0	2749	8330	0	2802	10560	0	3471	12110	0	3501	13030	0	3562	14730	0	3678
	18	4250	0	2245	6350	0	2294	6436	0	2790	8260	0	2854	10470	0	3528	12060	0	3616	12990	0	3665	14680	0	3793
	20	4200	0	2270	6300	0	2319	6380	0	2822	8200	0	2891	10400	0	3567	12000	0	3690	12750	0	3776	14600	0	3911
	22	4150	0	2294	6250	0	2343	6300	0	2864	8100	0	2945	10310	0	3624	11940	0	3788	12870	0	3870	14540	0	4022
	24	4100	0	2319	6200	0	2369	6244	0	2905	8040	0	2997	10240	0	3680	11880	0	3887	12810	0	3970	14360	0	4135
1.5+1.5 +1.5+4.2+4.2	16	4000	0	2120	6100	0	2170	7198	0	2549	7730	0	2602	9560	0	3141	11110	0	3171	12030	0	3232	13730	0	3348
	18	3950	0	2145	6050	0	2194	7136	0	2590	7660	0	2654	9470	0	3198	11060	0	3286	11990	0	3335	13680	0	3463
	20	3900	0	2170	6000	0	2219	7180	0	2622	7600	0	2691	9400	0	3237	11000	0	3380	11750	0	3446	13600	0	3581
	22	3850	0	2194	5950	0	2243	7100	0	2664	7500	0	2745	9310	0	3294	10040	0	3458	11870	0	3540	13540	0	3692
	24	3800	0	2119	5900	0	2268	6944	0	2705	7440	0	2791	9240	0	3350	10880	0	3557	11810	0	3640	13360	0	3802

	INDOOR	OUTDOOR TEMPERATURE (°CDB)																							
	EDB	-15			-10			-7			-5			0			7			10			15		
	°C	TC	SHC	PI	TC	SHC	PI	TC	SHC	PI	TC	SHC	PI	TC	SHC	PI	TC	SHC	PI	TC	SHC	PI	TC	SHC	PI
1.5+1.5 +1.5+4.2+5.0	16	4300	0	2250	6400	0	2300	7798	0	2809	8330	0	2862	10560	0	3561	12110	0	3591	13030	0	3652	14730	0	3768
	18	4250	0	2275	6350	0	2324	6436	0	2850	8260	0	2914	10470	0	3618	12060	0	3706	12990	0	3755	14680	0	3883
	20	4200	0	2300	6300	0	2349	6380	0	2882	8200	0	2951	10400	0	2657	12000	0	3780	12750	0	3866	14600	0	4011
	22	4150	0	2324	6250	0	2373	6300	0	2924	8100	0	3005	10310	0	3714	11940	0	3878	12870	0	3960	14540	0	4112
	24	4100	0	2349	6200	0	2399	6244	0	2965	8040	0	3057	10240	0	3770	11880	0	3977	12810	0	4060	14360	0	4225
1.5+1.5 +1.5+4.2+6.0	16	4300	0	2250	6400	0	2300	7798	0	2809	8330	0	2862	10560	0	3561	12110	0	3591	13030	0	3652	14730	0	3768
	18	4250	0	2275	6350	0	2324	6436	0	2850	8260	0	2914	10470	0	3618	12060	0	3706	12990	0	3755	14680	0	3883
	20	4200	0	2300	6300	0	2349	6380	0	2882	8200	0	2951	10400	0	2657	12000	0	3780	12750	0	3866	14600	0	4011
	22	4150	0	2324	6250	0	2373	6300	0	2924	8100	0	3005	10310	0	3714	11940	0	3878	12870	0	3960	14540	0	4112
	24	4100	0	2349	6200	0	2399	6244	0	2965	8040	0	3057	10240	0	3770	11880	0	3977	12810	0	4060	14360	0	4225
1.5+1.5 +1.5+5.0+5.0	16	4300	0	2330	6400	0	2380	7798	0	2969	8730	0	3022	10560	0	3781	12110	0	3811	13030	0	3872	14730	0	3988
	18	4250	0	2355	6350	0	2404	7736	0	3010	8660	0	3074	10470	0	3838	12060	0	3926	12990	0	3975	14680	0	4103
	20	4200	0	2380	6300	0	2429	7680	0	3042	8600	0	3111	10400	0	3877	12000	0	4000	12750	0	4086	14600	0	4221
	22	4150	0	2404	6250	0	2453	7600	0	3084	8500	0	3165	10310	0	3934	11940	0	4098	12870	0	4180	14540	0	4332
	24	4100	0	2429	6200	0	2478	7544	0	3125	8440	0	3217	10240	0	3990	11880	0	4197	12810	0	4280	14360	0	4445
1.5+1.5 +1.5+5.0+6.0	16	4300	0	2330	6400	0	2380	7798	0	2969	8730	0	3022	10560	0	3781	12110	0	3811	13030	0	3872	14730	0	3988
	18	4250	0	2355	6350	0	2404	7736	0	3010	8660	0	3074	10470	0	3838	12060	0	3926	12990	0	3975	14680	0	4103
	20	4200	0	2380	6300	0	2429	7680	0	3042	8600	0	3111	10400	0	3877	12000	0	4000	12750	0	4086	14600	0	4221
	22	4150	0	2404	6250	0	2453	7600	0	3084	8500	0	3165	10310	0	3934	11940	0	4098	12870	0	4180	14540	0	4332
	24	4100	0	2429	6200	0	2478	7544	0	3125	8440	0	3217	10240	0	3990	11880	0	4197	12810	0	4280	14360	0	4445
1.5+1.5 +1.8+1.8+1.8	16	4000	0	1820	6100	0	1870	7198	0	1949	7730	0	2002	9560	0	2241	11110	0	2271	12030	0	2332	13730	0	2448
	18	3950	0	1845	6050	0	1894	7136	0	1990	7660	0	2054	9470	0	2298	11060	0	2386	11990	0	2435	13680	0	2563
	20	3900	0	1870	6000	0	1919	7180	0	2022	7600	0	2091	9400	0	2337	11000	0	2530	11750	0	2546	13600	0	2681
	22	3850	0	1894	5950	0	1943	7100	0	2064	7500	0	2145	9310	0	2394	10040	0	2558	11870	0	2640	13540	0	2792
	24	3800	0	1919	5900	0	1968	6944	0	2105	7440	0	2197	9240	0	2450	10880	0	2657	11810	0	2740	13360	0	2905
1.5+1.5 +1.8+1.8+2.5	16	4300	0	1880	6400	0	1930	7798	0	2069	8330	0	2122	10560	0	2411	12110	0	2441	13030	0	2502	14730	0	2618
	18	4250	0	1905	6350	0	1954	7736	0	2110	8260	0	2174	10470	0	2468	12060	0	2556	12990	0	2605	14680	0	2733
	20	4200	0	1930	6300	0	1979	7680	0	2142	8200	0	2211	10400	0	2507	12000	0	2630	12750	0	2716	14600	0	2851
	22	4150	0	1954	6250	0	2003	7600	0	2184	8100	0	2265	10310	0	2564	11940	0	2728	12870	0	2810	14540	0	2962
	24	4100	0	1979	6200	0	2028	7544	0	2225	8040	0	2317	10240	0	2620	11880	0	2827	12810	0	2910	14360	0	3075
1.5+1.5 +1.8+1.8+3.5	16	4300	0	1950	6400	0	2000	7798	0	2209	8330	0	2262	10560	0	2631	12110	0	2661	13030	0	2722	14730	0	2838
	18	4250	0	1975	6350	0	2024	7736	0	2250	8260	0	2314	10470	0	2688	12060	0	2776	12990	0	2825	14680	0	2953
	20	4200	0	2000	6300	0	2049	7680	0	2282	8200	0	2351	10400	0	2727	12000	0	2890	12750	0	2936	14600	0	3071
	22	4150	0	2024	6250	0	2073	7600	0	2324	8100	0	2405	10310	0	2784	11940	0	2948	12870	0	3030	14540	0	3182
	24	4100	0	2049	6200	0	2098	7544	0	2365	8040	0	2457	10240	0	2840	11880	0	3047	12810	0	3130	14360	0	3295
1.5+1.5 +1.8+1.8+4.2	16	4300	0	1950	6400	0	2000	7798	0	2209	8330	0	2262	10560	0	2631	12110	0	2661	13030	0	2722	14730	0	2838
	18	4250	0	1975	6350	0	2024	7736	0	2250	8260	0	2314	10470	0	2688	12060	0	2776	12990	0	2825	14680	0	2953
	20	4200	0	2000	6300	0	2049	7680	0	2282	8200	0	2351	10400	0	2727	12000	0	2890	12750	0	2936	14600	0	3071
	22	4150	0	2024	6250	0	2073	7600	0	2324	8100	0	2405	10310	0	2784	11940	0	2948	12870	0	3030	14540	0	3182
	24	4100	0	2049	6200	0	2098	7544	0	2365	8040	0	2457	10240	0	2840	11880	0	3047	12810	0	3130	14360	0	3295

	INDOOR	OUTDOOR TEMPERATURE (°CDB)																							
	EDB	-15			-10			-7			-5			0			7			10			15		
	°C	TC	SHC	PI	TC	SHC	PI	TC	SHC	PI	TC	SHC	PI	TC	SHC	PI	TC	SHC	PI	TC	SHC	PI	TC	SHC	PI
1.5+1.5 +1.8+1.8+5.0	16	4300	0	2190	6400	0	2240	7798	0	2689	8330	0	2742	10560	0	3371	12110	0	3401	13030	0	3462	14730	0	3578
	18	4250	0	2215	6350	0	2264	6436	0	2730	8260	0	2794	10470	0	3428	12060	0	3516	12990	0	3565	14680	0	3693
	20	4200	0	2240	6300	0	2289	6380	0	2762	8200	0	2831	10400	0	3467	12000	0	3590	12750	0	3676	14600	0	3811
	22	4150	0	2264	6250	0	2313	6300	0	2804	8100	0	2885	10310	0	3524	11940	0	3688	12870	0	3770	14540	0	3922
	24	4100	0	2289	6200	0	2339	6244	0	2845	8040	0	2937	10240	0	3580	11880	0	3787	12810	0	3870	14360	0	4035
1.5+1.5 +1.8+1.8+6.0	16	4300	0	2190	6400	0	2240	7798	0	2689	8330	0	2742	10560	0	3371	12110	0	3401	13030	0	3462	14730	0	3578
	18	4250	0	2215	6350	0	2264	6436	0	2730	8260	0	2794	10470	0	3428	12060	0	3516	12990	0	3565	14680	0	3693
	20	4200	0	2240	6300	0	2289	6380	0	2762	8200	0	2831	10400	0	3467	12000	0	3590	12750	0	3676	14600	0	3811
	22	4150	0	2264	6250	0	2313	6300	0	2804	8100	0	2885	10310	0	3524	11940	0	3688	12870	0	3770	14540	0	3922
	24	4100	0	2289	6200	0	2339	6244	0	2845	8040	0	2937	10240	0	3580	11880	0	3787	12810	0	3870	14360	0	4035
1.5+1.5 +1.8+2.5+2.5	16	4300	0	1950	6400	0	2000	7798	0	2209	8330	0	2262	10560	0	2631	12110	0	2661	13030	0	2722	14730	0	2838
	18	4250	0	1975	6350	0	2024	7736	0	2250	8260	0	2314	10470	0	2688	12060	0	2776	12990	0	2825	14680	0	2953
	20	4200	0	2000	6300	0	2049	7680	0	2282	8200	0	2351	10400	0	2727	12000	0	2780	12750	0	2936	14600	0	3071
	22	4150	0	2024	6250	0	2073	7600	0	2324	8100	0	2405	10310	0	2784	11940	0	2948	12870	0	3030	14540	0	3182
	24	4100	0	2049	6200	0	2098	7544	0	2365	8040	0	2457	10240	0	2840	11880	0	3047	12810	0	3130	14360	0	3295
1.5+1.5 +1.8+2.5+3.5	16	4300	0	2010	6400	0	2060	7798	0	2339	8330	0	2392	10560	0	2811	12110	0	2841	13030	0	2902	14730	0	3018
	18	4250	0	2035	6350	0	2084	7736	0	2380	8260	0	2444	10470	0	2868	12060	0	2956	12990	0	3005	14680	0	3133
	20	4200	0	2060	6300	0	2109	7680	0	2412	8200	0	2481	10400	0	2907	12000	0	3030	12750	0	3116	14600	0	3251
	22	4150	0	2084	6250	0	2133	7600	0	2454	8100	0	2535	10310	0	2964	11940	0	3128	12870	0	3210	14540	0	3362
	24	4100	0	2109	6200	0	2158	7544	0	2495	8040	0	2587	10240	0	3020	11880	0	3227	12810	0	3310	14360	0	3475
1.5+1.5 +1.8+2.5+4.2	16	4300	0	2010	6400	0	2060	7798	0	2339	8330	0	2392	10560	0	2811	12110	0	2841	13030	0	2902	14730	0	3018
	18	4250	0	2035	6350	0	2084	7736	0	2380	8260	0	2444	10470	0	2868	12060	0	2956	12990	0	3005	14680	0	3133
	20	4200	0	2060	6300	0	2109	7680	0	2412	8200	0	2481	10400	0	2907	12000	0	3030	12750	0	3116	14600	0	3251
	22	4150	0	2084	6250	0	2133	7600	0	2454	8100	0	2535	10310	0	2964	11940	0	3128	12870	0	3210	14540	0	3362
	24	4100	0	2109	6200	0	2158	7544	0	2495	8040	0	2587	10240	0	3020	11880	0	3227	12810	0	3310	14360	0	3475
1.5+1.5 +1.8+2.5+5.0	16	4300	0	2220	6400	0	2270	7798	0	2749	8330	0	2802	10560	0	3471	12110	0	3501	13030	0	3562	14730	0	3678
	18	4250	0	2245	6350	0	2294	6436	0	2790	8260	0	2854	10470	0	3528	12060	0	3616	12990	0	3665	14680	0	3793
	20	4200	0	2270	6300	0	2319	6380	0	2822	8200	0	2891	10400	0	3567	12000	0	3650	12750	0	3776	14600	0	3911
	22	4150	0	2294	6250	0	2343	6300	0	2864	8100	0	2945	10310	0	3624	11940	0	3788	12870	0	3870	14540	0	4022
	24	4100	0	2319	6200	0	2369	6244	0	2905	8040	0	2997	10240	0	3680	11880	0	3887	12810	0	3970	14360	0	4135
1.5+1.5 +1.8+2.5+6.0	16	4300	0	2220	6400	0	2270	7798	0	2749	8330	0	2802	10560	0	3471	12110	0	3501	13030	0	3562	14730	0	3678
	18	4250	0	2245	6350	0	2294	6436	0	2790	8260	0	2854	10470	0	3528	12060	0	3616	12990	0	3665	14680	0	3793
	20	4200	0	2270	6300	0	2319	6380	0	2822	8200	0	2891	10400	0	3567	12000	0	3650	12750	0	3776	14600	0	3911
	22	4150	0	2294	6250	0	2343	6300	0	2864	8100	0	2945	10310	0	3624	11940	0	3788	12870	0	3870	14540	0	4022
	24	4100	0	2319	6200	0	2369	6244	0	2905	8040	0	2997	10240	0	3680	11880	0	3887	12810	0	3970	14360	0	4135
1.5+1.5 +1.8+3.5+3.5	16	4300	0	2070	6400	0	2120	7798	0	2469	8330	0	2502	10560	0	2971	12110	0	3001	13030	0	3062	14730	0	3178
	18	4250	0	2095	6350	0	2144	7736	0	2490	8260	0	2554	10470	0	3028	12060	0	3116	12990	0	3165	14680	0	3293
	20	4200	0	2120	6300	0	2169	7680	0	2522	8200	0	2591	10400	0	3067	12000	0	3190	12750	0	3276	14600	0	3411
	22	4150	0	2144	6250	0	2193	7600	0	2564	8100	0	2645	10310	0	3124	11940	0	3288	12870	0	3370	14540	0	3522
	24	4100	0	2169	6200	0	2218	7544	0	2605	8040	0	2697	10240	0	3180	11880	0	3387	12810	0	3470	14360	0	3635

	INDOOR	OUTDOOR TEMPERATURE (°CDB)																							
	EDB	-15			-10			-7			-5			0			7			10			15		
	°C	TC	SHC	PI	TC	SHC	PI	TC	SHC	PI	TC	SHC	PI	TC	SHC	PI	TC	SHC	PI	TC	SHC	PI	TC	SHC	PI
1.5+1.5 +1.8+3.5+4 .2	16	4300	0	2100	6400	0	2150	7798	0	2509	8330	0	2562	10560	0	3071	12110	0	3101	13030	0	3162	14730	0	3278
	18	4250	0	2125	6350	0	2174	7736	0	2550	8260	0	2614	10470	0	3128	12060	0	3216	12990	0	3265	14680	0	3393
	20	4200	0	2150	6300	0	2199	7680	0	2582	8200	0	2651	10400	0	3167	12000	0	3290	12750	0	3376	14600	0	3511
	22	4150	0	2174	6250	0	2223	7600	0	2624	8100	0	2705	10310	0	3224	11940	0	3388	12870	0	3470	14540	0	3622
	24	4100	0	2199	6200	0	2248	7544	0	2665	8040	0	2757	10240	0	3280	11880	0	3487	12810	0	3570	14360	0	3735
1.5+1.5 +1.8+3.5+5 .0	16	4300	0	2250	6400	0	2300	7798	0	2809	8330	0	2862	10560	0	3561	12110	0	3591	13030	0	3652	14730	0	3768
	18	4250	0	2275	6350	0	2324	6436	0	2850	8260	0	2914	10470	0	3618	12060	0	3706	12990	0	3755	14680	0	3883
	20	4200	0	2300	6300	0	2349	6380	0	2882	8200	0	2951	10400	0	3657	12000	0	3780	12750	0	3866	14600	0	4011
	22	4150	0	2324	6250	0	2373	6300	0	2924	8100	0	3005	10310	0	3714	11940	0	3878	12870	0	3960	14540	0	4112
	24	4100	0	2349	6200	0	2399	6244	0	2965	8040	0	3057	10240	0	3770	11880	0	3977	12810	0	4060	14360	0	4225
1.5+1.5 +1.8+3.5+6 .0	16	4300	0	2250	6400	0	2300	7798	0	2809	8330	0	2862	10560	0	3561	12110	0	3591	13030	0	3652	14730	0	3768
	18	4250	0	2275	6350	0	2324	6436	0	2850	8260	0	2914	10470	0	3618	12060	0	3706	12990	0	3755	14680	0	3883
	20	4200	0	2300	6300	0	2349	6380	0	2882	8200	0	2951	10400	0	3657	12000	0	3780	12750	0	3866	14600	0	4011
	22	4150	0	2324	6250	0	2373	6300	0	2924	8100	0	3005	10310	0	3714	11940	0	3878	12870	0	3960	14540	0	4112
	24	4100	0	2349	6200	0	2399	6244	0	2965	8040	0	3057	10240	0	3770	11880	0	3977	12810	0	4060	14360	0	4225
1.5+1.5 +1.8+4.2+4 .2	16	4300	0	2250	6400	0	2300	7798	0	2809	8330	0	2862	10560	0	3561	12110	0	3591	13030	0	3652	14730	0	3768
	18	4250	0	2275	6350	0	2324	6436	0	2850	8260	0	2914	10470	0	3618	12060	0	3706	12990	0	3755	14680	0	3883
	20	4200	0	2300	6300	0	2349	6380	0	2882	8200	0	2951	10400	0	3657	12000	0	3780	12750	0	3866	14600	0	4011
	22	4150	0	2324	6250	0	2373	6300	0	2924	8100	0	3005	10310	0	3714	11940	0	3878	12870	0	3960	14540	0	4112
	24	4100	0	2349	6200	0	2399	6244	0	2965	8040	0	3057	10240	0	3770	11880	0	3977	12810	0	4060	14360	0	4225
1.5+1.5 +1.8+4.2+5 .0	16	4300	0	2250	6400	0	2300	7798	0	2809	8330	0	2862	10560	0	3561	12110	0	3591	13030	0	3652	14730	0	3768
	18	4250	0	2275	6350	0	2324	6436	0	2850	8260	0	2914	10470	0	3618	12060	0	3706	12990	0	3755	14680	0	3883
	20	4200	0	2300	6300	0	2349	6380	0	2882	8200	0	2951	10400	0	3657	12000	0	3780	12750	0	3866	14600	0	4011
	22	4150	0	2324	6250	0	2373	6300	0	2924	8100	0	3005	10310	0	3714	11940	0	3878	12870	0	3960	14540	0	4112
	24	4100	0	2349	6200	0	2399	6244	0	2965	8040	0	3057	10240	0	3770	11880	0	3977	12810	0	4060	14360	0	4225
1.5+1.5 +1.8+4.2+6 .0	16	4300	0	2250	6400	0	2300	7798	0	2809	8330	0	2862	10560	0	3561	12110	0	3591	13030	0	3652	14730	0	3768
	18	4250	0	2275	6350	0	2324	6436	0	2850	8260	0	2914	10470	0	3618	12060	0	3706	12990	0	3755	14680	0	3883
	20	4200	0	2300	6300	0	2349	6380	0	2882	8200	0	2951	10400	0	3657	12000	0	3780	12750	0	3866	14600	0	4011
	22	4150	0	2324	6250	0	2373	6300	0	2924	8100	0	3005	10310	0	3714	11940	0	3878	12870	0	3960	14540	0	4112
	24	4100	0	2349	6200	0	2399	6244	0	2965	8040	0	3057	10240	0	3770	11880	0	3977	12810	0	4060	14360	0	4225
1.5+1.5 +1.8+5.0+5 .0	16	4300	0	2290	6400	0	2340	7798	0	2889	8330	0	2942	10560	0	3671	12110	0	3701	13030	0	3762	14730	0	3878
	18	4250	0	2315	6350	0	2364	6436	0	2930	8260	0	2994	10470	0	3728	12060	0	3816	12990	0	3865	14680	0	3993
	20	4200	0	2340	6300	0	2389	6380	0	2962	8200	0	3031	10400	0	2767	12000	0	3890	12750	0	3976	14600	0	4121
	22	4150	0	2364	6250	0	2413	6300	0	3004	8100	0	3085	10310	0	3824	11940	0	3988	12870	0	4110	14540	0	4222
	24	4100	0	2389	6200	0	2439	6244	0	3045	8040	0	3134	10240	0	3880	11880	0	4087	12810	0	4170	14360	0	4335
1.5+1.5 +1.8+5.0+6 .0	16	4300	0	2290	6400	0	2340	7798	0	2889	8330	0	2942	10560	0	3671	12110	0	3701	13030	0	3762	14730	0	3878
	18	4250	0	2315	6350	0	2364	6436	0	2930	8260	0	2994	10470	0	3728	12060	0	3816	12990	0	3865	14680	0	3993
	20	4200	0	2340	6300	0	2389	6380	0	2962	8200	0	3031	10400	0	2767	12000	0	3890	12750	0	3976	14600	0	4121
	22	4150	0	2364	6250	0	2413	6300	0	3004	8100	0	3085	10310	0	3824	11940	0	3988	12870	0	4110	14540	0	4222
	24	4100	0	2389	6200	0	2439	6244	0	3045	8040	0	3134	10240	0	3880	11880	0	4087	12810	0	4170	14360	0	4335
1.5+1.5 +2.5+2.5+2 .5	16	4300	0	1950	6400	0	2000	7798	0	2209	8330	0	2262	10560	0	2631	12110	0	2661	13030	0	2722	14730	0	2838
	18	4250	0	1975	6350	0	2024	7736	0	2250	8260	0	2314	10470	0	2688	12060	0	2776	12990	0	2825	14680	0	2953
	20	4200	0	2000	6300	0	2049	7680	0	2282	8200	0	2351	10400	0	2727	12000	0	2850	12750	0	2936	14600	0	3071
	22	4150	0	2024	6250	0	2073	7600	0	2324	8100	0	2405	10310	0	2784	11940	0	2948	12870	0	3030	14540	0	3182
	24	4100	0	2049	6200	0	2098	7544	0	2365	8040	0	2457	10240	0	2840	11880	0	3047	12810	0	3130	14360	0	3295

	INDOOR	OUTDOOR TEMPERATURE (°CDB)																							
	EDB	-15			-10			-7			-5			0			7			10			15		
	°C	TC	SHC	PI	TC	SHC	PI	TC	SHC	PI	TC	SHC	PI	TC	SHC	PI	TC	SHC	PI	TC	SHC	PI	TC	SHC	PI
1.5+1.5 +2.5+2.5+3.5	16	4300	0	2040	6400	0	2090	7798	0	2409	8330	0	2462	10560	0	2911	12110	0	2941	13030	0	3002	14730	0	3118
	18	4250	0	2065	6350	0	2114	7736	0	2450	8260	0	2514	10470	0	2968	12060	0	3056	12990	0	3105	14680	0	3233
	20	4200	0	2090	6300	0	2139	7680	0	2484	8200	0	2551	10400	0	3007	12000	0	3130	12750	0	3216	14600	0	3351
	22	4150	0	2114	6250	0	2163	7600	0	2524	8100	0	2605	10310	0	3064	11940	0	3228	12870	0	3310	14540	0	3462
	24	4100	0	2139	6200	0	2188	7544	0	2565	8040	0	2657	10240	0	3120	11880	0	3327	12810	0	3410	14360	0	3575
1.5+1.5 +2.5+2.5+4.2	16	4300	0	2040	6400	0	2090	7798	0	2409	8330	0	2462	10560	0	2911	12110	0	2941	13030	0	3002	14730	0	3118
	18	4250	0	2065	6350	0	2114	7736	0	2450	8260	0	2514	10470	0	2968	12060	0	3056	12990	0	3105	14680	0	3233
	20	4200	0	2090	6300	0	2139	7680	0	2484	8200	0	2551	10400	0	3007	12000	0	3130	12750	0	3216	14600	0	3351
	22	4150	0	2114	6250	0	2163	7600	0	2524	8100	0	2605	10310	0	3064	11940	0	3228	12870	0	3310	14540	0	3462
	24	4100	0	2139	6200	0	2188	7544	0	2565	8040	0	2657	10240	0	3120	11880	0	3327	12810	0	3410	14360	0	3575
1.5+1.5 +2.5+2.5+5.0	16	4300	0	2250	6400	0	2300	7798	0	2809	8330	0	2862	10560	0	3561	12110	0	3591	13030	0	3652	14730	0	3768
	18	4250	0	2275	6350	0	2324	6436	0	2850	8260	0	2914	10470	0	3618	12060	0	3706	12990	0	3755	14680	0	3883
	20	4200	0	2300	6300	0	2349	6380	0	2882	8200	0	2951	10400	0	3657	12000	0	3780	12750	0	3866	14600	0	4011
	22	4150	0	2324	6250	0	2373	6300	0	2924	8100	0	3005	10310	0	3714	11940	0	3878	12870	0	3960	14540	0	4112
	24	4100	0	2349	6200	0	2399	6244	0	2965	8040	0	3057	10240	0	3770	11880	0	3977	12810	0	4060	14360	0	4225
1.5+1.5 +2.5+2.5+6.0	16	4300	0	2250	6400	0	2300	7798	0	2809	8330	0	2862	10560	0	3561	12110	0	3591	13030	0	3652	14730	0	3768
	18	4250	0	2275	6350	0	2324	6436	0	2850	8260	0	2914	10470	0	3618	12060	0	3706	12990	0	3755	14680	0	3883
	20	4200	0	2300	6300	0	2349	6380	0	2882	8200	0	2951	10400	0	3657	12000	0	3780	12750	0	3866	14600	0	4011
	22	4150	0	2324	6250	0	2373	6300	0	2924	8100	0	3005	10310	0	3714	11940	0	3878	12870	0	3960	14540	0	4112
	24	4100	0	2349	6200	0	2399	6244	0	2965	8040	0	3057	10240	0	3770	11880	0	3977	12810	0	4060	14360	0	4225
1.5+1.5 +2.5+3.5+3.5	16	4300	0	2100	6400	0	2150	7798	0	2509	8330	0	2562	10560	0	3071	12110	0	3101	13030	0	3162	14730	0	3278
	18	4250	0	2125	6350	0	2174	7736	0	2550	8260	0	2614	10470	0	3128	12060	0	3216	12990	0	3265	14680	0	3393
	20	4200	0	2150	6300	0	2199	7680	0	2582	8200	0	2651	10400	0	3167	12000	0	3290	12750	0	3376	14600	0	3511
	22	4150	0	2174	6250	0	2223	7600	0	2624	8100	0	2705	10310	0	3224	11940	0	3388	12870	0	3470	14540	0	3622
	24	4100	0	2199	6200	0	2248	7544	0	2665	8040	0	2757	10240	0	3280	11880	0	3487	12810	0	3570	14360	0	3735
1.5+1.5 +2.5+3.5+4.2	16	4000	0	2120	6100	0	2170	7198	0	2549	7730	0	2602	9560	0	3141	11110	0	3171	12030	0	3232	13730	0	3348
	18	3950	0	2145	6050	0	2194	7136	0	2590	7660	0	2654	9470	0	3198	11060	0	3286	11990	0	3335	13680	0	3463
	20	3900	0	2170	6000	0	2219	7180	0	2622	7600	0	2691	9400	0	3237	11000	0	3350	11750	0	3446	13600	0	3581
	22	3850	0	2194	5950	0	2243	7100	0	2664	7500	0	2745	9310	0	3294	10040	0	3458	11870	0	3540	13540	0	3692
	24	3800	0	2119	5900	0	2268	6944	0	2705	7440	0	2791	9240	0	3350	10880	0	3557	11810	0	3640	13360	0	3802
1.5+1.5 +2.5+3.5+5.0	16	4300	0	2290	6400	0	2340	7798	0	2889	8330	0	2942	10560	0	3671	12110	0	3701	13030	0	3762	14730	0	3878
	18	4250	0	2315	6350	0	2364	6436	0	2930	8260	0	2994	10470	0	3728	12060	0	3816	12990	0	3865	14680	0	3993
	20	4200	0	2340	6300	0	2389	6380	0	2962	8200	0	3031	10400	0	2767	12000	0	3890	12750	0	3976	14600	0	4121
	22	4150	0	2364	6250	0	2413	6300	0	3004	8100	0	3085	10310	0	3824	11940	0	3988	12870	0	4110	14540	0	4222
	24	4100	0	2389	6200	0	2439	6244	0	3045	8040	0	3134	10240	0	3880	11880	0	4087	12810	0	4170	14360	0	4335
1.5+1.5 +2.5+3.5+6.0	16	4300	0	2290	6400	0	2340	7798	0	2889	8330	0	2942	10560	0	3671	12110	0	3701	13030	0	3762	14730	0	3878
	18	4250	0	2315	6350	0	2364	6436	0	2930	8260	0	2994	10470	0	3728	12060	0	3816	12990	0	3865	14680	0	3993
	20	4200	0	2340	6300	0	2389	6380	0	2962	8200	0	3031	10400	0	2767	12000	0	3890	12750	0	3976	14600	0	4121
	22	4150	0	2364	6250	0	2413	6300	0	3004	8100	0	3085	10310	0	3824	11940	0	3988	12870	0	4110	14540	0	4222
	24	4100	0	2389	6200	0	2439	6244	0	3045	8040	0	3134	10240	0	3880	11880	0	4087	12810	0	4170	14360	0	4335

	INDOOR	OUTDOOR TEMPERATURE (°CDB)																							
	EDB	-15			-10			-7			-5			0			7			10			15		
	°C	TC	SHC	PI	TC	SHC	PI	TC	SHC	PI	TC	SHC	PI	TC	SHC	PI	TC	SHC	PI	TC	SHC	PI	TC	SHC	PI
1.5+1.5+2.5+4.2+4.2	16	4300	0	2290	6400	0	2340	7798	0	2889	8330	0	2942	10560	0	3671	12110	0	3701	13030	0	3762	14730	0	3878
	18	4250	0	2315	6350	0	2364	6436	0	2930	8260	0	2994	10470	0	3728	12060	0	3816	12990	0	3865	14680	0	3993
	20	4200	0	2340	6300	0	2389	6380	0	2962	8200	0	3031	10400	0	2767	12000	0	3890	12750	0	3976	14600	0	4121
	22	4150	0	2364	6250	0	2413	6300	0	3004	8100	0	3085	10310	0	3824	11940	0	3988	12870	0	4110	14540	0	4222
	24	4100	0	2389	6200	0	2439	6244	0	3045	8040	0	3134	10240	0	3880	11880	0	4087	12810	0	4170	14360	0	4335
1.5+1.5+2.5+4.2+5.0	16	4300	0	2290	6400	0	2340	7798	0	2889	8330	0	2942	10560	0	3671	12110	0	3701	13030	0	3762	14730	0	3878
	18	4250	0	2315	6350	0	2364	6436	0	2930	8260	0	2994	10470	0	3728	12060	0	3816	12990	0	3865	14680	0	3993
	20	4200	0	2340	6300	0	2389	6380	0	2962	8200	0	3031	10400	0	2767	12000	0	3890	12750	0	3976	14600	0	4121
	22	4150	0	2364	6250	0	2413	6300	0	3004	8100	0	3085	10310	0	3824	11940	0	3988	12870	0	4110	14540	0	4222
	24	4100	0	2389	6200	0	2439	6244	0	3045	8040	0	3134	10240	0	3880	11880	0	4087	12810	0	4170	14360	0	4335
1.5+1.5+2.5+5.0+5.0	16	4300	0	2330	6400	0	2380	7798	0	2969	8730	0	3022	10560	0	3781	12110	0	3811	13030	0	3872	14730	0	3988
	18	4250	0	2355	6350	0	2404	7736	0	3010	8660	0	3074	10470	0	3838	12060	0	3926	12990	0	3975	14680	0	4103
	20	4200	0	2380	6300	0	2429	7680	0	3042	8600	0	3111	10400	0	3877	12000	0	4000	12750	0	4086	14600	0	4221
	22	4150	0	2404	6250	0	2453	7600	0	3084	8500	0	3165	10310	0	3934	11940	0	4098	12870	0	4180	14540	0	4332
	24	4100	0	2429	6200	0	2478	7544	0	3125	8440	0	3217	10240	0	3990	11880	0	4197	12810	0	4280	14360	0	4445
1.5+1.5+2.5+5.0+6.0	16	4300	0	2330	6400	0	2380	7798	0	2969	8730	0	3022	10560	0	3781	12110	0	3811	13030	0	3872	14730	0	3988
	18	4250	0	2355	6350	0	2404	7736	0	3010	8660	0	3074	10470	0	3838	12060	0	3926	12990	0	3975	14680	0	4103
	20	4200	0	2380	6300	0	2429	7680	0	3042	8600	0	3111	10400	0	3877	12000	0	4000	12750	0	4086	14600	0	4221
	22	4150	0	2404	6250	0	2453	7600	0	3084	8500	0	3165	10310	0	3934	11940	0	4098	12870	0	4180	14540	0	4332
	24	4100	0	2429	6200	0	2478	7544	0	3125	8440	0	3217	10240	0	3990	11880	0	4197	12810	0	4280	14360	0	4445
1.5+1.5+3.5+3.5+3.5	16	4000	0	2120	6100	0	2170	7198	0	2549	7730	0	2602	9560	0	3141	11110	0	3171	12030	0	3232	13730	0	3348
	18	3950	0	2145	6050	0	2194	7136	0	2590	7660	0	2654	9470	0	3198	11060	0	3286	11990	0	3335	13680	0	3463
	20	3900	0	2170	6000	0	2219	7180	0	2622	7600	0	2691	9400	0	3237	11000	0	3360	11750	0	3446	13600	0	3581
	22	3850	0	2194	5950	0	2243	7100	0	2664	7500	0	2745	9310	0	3294	10040	0	3458	11870	0	3540	13540	0	3692
	24	3800	0	2119	5900	0	2268	6944	0	2705	7440	0	2791	9240	0	3350	10880	0	3557	11810	0	3640	13360	0	3802
1.5+1.5+3.5+3.5+4.2	16	4000	0	2120	6100	0	2170	7198	0	2549	7730	0	2602	9560	0	3141	11110	0	3171	12030	0	3232	13730	0	3348
	18	3950	0	2145	6050	0	2194	7136	0	2590	7660	0	2654	9470	0	3198	11060	0	3286	11990	0	3335	13680	0	3463
	20	3900	0	2170	6000	0	2219	7180	0	2622	7600	0	2691	9400	0	3237	11000	0	3360	11750	0	3446	13600	0	3581
	22	3850	0	2194	5950	0	2243	7100	0	2664	7500	0	2745	9310	0	3294	10040	0	3458	11870	0	3540	13540	0	3692
	24	3800	0	2119	5900	0	2268	6944	0	2705	7440	0	2791	9240	0	3350	10880	0	3557	11810	0	3640	13360	0	3802
1.5+1.5+3.5+3.5+5.0	16	4300	0	2290	6400	0	2340	7798	0	2889	8330	0	2942	10560	0	3671	12110	0	3701	13030	0	3762	14730	0	3878
	18	4250	0	2315	6350	0	2364	6436	0	2930	8260	0	2994	10470	0	3728	12060	0	3816	12990	0	3865	14680	0	3993
	20	4200	0	2340	6300	0	2389	6380	0	2962	8200	0	3031	10400	0	2767	12000	0	3890	12750	0	3976	14600	0	4121
	22	4150	0	2364	6250	0	2413	6300	0	3004	8100	0	3085	10310	0	3824	11940	0	3988	12870	0	4110	14540	0	4222
	24	4100	0	2389	6200	0	2439	6244	0	3045	8040	0	3134	10240	0	3880	11880	0	4087	12810	0	4170	14360	0	4335
1.5+1.5+3.5+3.5+6.0	16	4300	0	2290	6400	0	2340	7798	0	2889	8330	0	2942	10560	0	3671	12110	0	3701	13030	0	3762	14730	0	3878
	18	4250	0	2315	6350	0	2364	6436	0	2930	8260	0	2994	10470	0	3728	12060	0	3816	12990	0	3865	14680	0	3993
	20	4200	0	2340	6300	0	2389	6380	0	2962	8200	0	3031	10400	0	2767	12000	0	3890	12750	0	3976	14600	0	4121
	22	4150	0	2364	6250	0	2413	6300	0	3004	8100	0	3085	10310	0	3824	11940	0	3988	12870	0	4110	14540	0	4222
	24	4100	0	2389	6200	0	2439	6244	0	3045	8040	0	3134	10240	0	3880	11880	0	4087	12810	0	4170	14360	0	4335
1.5+1.5+3.5+4.2+4.2	16	4300	0	2290	6400	0	2340	7798	0	2889	8330	0	2942	10560	0	3671	12110	0	3701	13030	0	3762	14730	0	3878
	18	4250	0	2315	6350	0	2364	6436	0	2930	8260	0	2994	10470	0	3728	12060	0	3816	12990	0	3865	14680	0	3993
	20	4200	0	2340	6300	0	2389	6380	0	2962	8200	0	3031	10400	0	2767	12000	0	3890	12750	0	3976	14600	0	4121
	22	4150	0	2364	6250	0	2413	6300	0	3004	8100	0	3085	10310	0	3824	11940	0	3988	12870	0	4110	14540	0	4222
	24	4100	0	2389	6200	0	2439	6244	0	3045	8040	0	3134	10240	0	3880	11880	0	4087	12810	0	4170	14360	0	4335
1.5+1.8+1.8+1.8	16	4300	0	1880	6400	0	1930	7798	0	2069	8330	0	2122	10560	0	2411	12110	0	2441	13030	0	2502	14730	0	2618
	18	4250	0	1905	6350	0	1954	7736	0	2110	8260	0	2174	10470	0	2468	12060	0	2556	12990	0	2605	14680	0	2733
	20	4200	0	1930	6300	0	1979	7680	0	2142	8200	0	2211	10400	0	2507	12000	0	2630	12750	0	2716	14600	0	2851
	22	4150	0	1954	6250	0	2003	7600	0	2184	8100	0	2265	10310	0	2564	11940	0	2728	12870	0	2810	14540	0	2962
	24	4100	0	1978	6200	0	2028	7544	0	2225	8040	0	2317	10240	0	2620	11880	0	2827	12810	0	2910	14360	0	3075

	INDOOR	OUTDOOR TEMPERATURE (°CDB)																							
	EDB	-15			-10			-7			-5			0			7			10			15		
	°C	TC	SHC	PI	TC	SHC	PI	TC	SHC	PI	TC	SHC	PI	TC	SHC	PI	TC	SHC	PI	TC	SHC	PI	TC	SHC	PI
1.5+1.8 +1.8+1.8+2.5	16	4300	0	1950	6400	0	2000	7798	0	2209	8330	0	2262	10560	0	2631	12110	0	2661	13030	0	2722	14730	0	2838
	18	4250	0	1975	6350	0	2024	7736	0	2250	8260	0	2314	10470	0	2688	12060	0	2776	12990	0	2825	14680	0	2953
	20	4200	0	2000	6300	0	2049	7680	0	2282	8200	0	2351	10400	0	2727	12000	0	2730	12750	0	2936	14600	0	3071
	22	4150	0	2024	6250	0	2073	7600	0	2324	8100	0	2405	10310	0	2784	11940	0	2948	12870	0	3030	14540	0	3182
	24	4100	0	2049	6200	0	2098	7544	0	2365	8040	0	2457	10240	0	2840	11880	0	3047	12810	0	3130	14360	0	3295
1.5+1.8 +1.8+1.8+3.5	16	4300	0	1950	6400	0	2000	7798	0	2209	8330	0	2262	10560	0	2631	12110	0	2661	13030	0	2722	14730	0	2838
	18	4250	0	1975	6350	0	2024	7736	0	2250	8260	0	2314	10470	0	2688	12060	0	2776	12990	0	2825	14680	0	2953
	20	4200	0	2000	6300	0	2049	7680	0	2282	8200	0	2351	10400	0	2727	12000	0	2830	12750	0	2936	14600	0	3071
	22	4150	0	2024	6250	0	2073	7600	0	2324	8100	0	2405	10310	0	2784	11940	0	2948	12870	0	3030	14540	0	3182
	24	4100	0	2049	6200	0	2098	7544	0	2365	8040	0	2457	10240	0	2840	11880	0	3047	12810	0	3130	14360	0	3295
1.5+1.8 +1.8+1.8+4.2	16	4300	0	2010	6400	0	2060	7798	0	2339	8330	0	2392	10560	0	2811	12110	0	2841	13030	0	2902	14730	0	3018
	18	4250	0	2035	6350	0	2084	7736	0	2380	8260	0	2444	10470	0	2868	12060	0	2956	12990	0	3005	14680	0	3133
	20	4200	0	2060	6300	0	2109	7680	0	2412	8200	0	2481	10400	0	2907	12000	0	3030	12750	0	3116	14600	0	3251
	22	4150	0	2084	6250	0	2133	7600	0	2454	8100	0	2535	10310	0	2964	11940	0	3128	12870	0	3210	14540	0	3362
	24	4100	0	2109	6200	0	2158	7544	0	2495	8040	0	2587	10240	0	3020	11880	0	3227	12810	0	3310	14360	0	3475
1.5+1.8 +1.8+1.8+5.0	16	4300	0	2220	6400	0	2270	7798	0	2749	8330	0	2802	10560	0	3471	12110	0	3501	13030	0	3562	14730	0	3678
	18	4250	0	2245	6350	0	2294	6436	0	2790	8260	0	2854	10470	0	3528	12060	0	3616	12990	0	3665	14680	0	3793
	20	4200	0	2270	6300	0	2319	6380	0	2822	8200	0	2891	10400	0	3567	12000	0	3690	12750	0	3776	14600	0	3911
	22	4150	0	2294	6250	0	2343	6300	0	2864	8100	0	2945	10310	0	3624	11940	0	3788	12870	0	3870	14540	0	4022
	24	4100	0	2319	6200	0	2369	6244	0	2905	8040	0	2997	10240	0	3680	11880	0	3887	12810	0	3970	14360	0	4135
1.5+1.8 +1.8+1.8+6.0	16	4300	0	2220	6400	0	2270	7798	0	2749	8330	0	2802	10560	0	3471	12110	0	3501	13030	0	3562	14730	0	3678
	18	4250	0	2245	6350	0	2294	6436	0	2790	8260	0	2854	10470	0	3528	12060	0	3616	12990	0	3665	14680	0	3793
	20	4200	0	2270	6300	0	2319	6380	0	2822	8200	0	2891	10400	0	3567	12000	0	3690	12750	0	3776	14600	0	3911
	22	4150	0	2294	6250	0	2343	6300	0	2864	8100	0	2945	10310	0	3624	11940	0	3788	12870	0	3870	14540	0	4022
	24	4100	0	2319	6200	0	2369	6244	0	2905	8040	0	2997	10240	0	3680	11880	0	3887	12810	0	3970	14360	0	4135
1.5+1.8 +1.8+2.5+2.5	16	4300	0	1950	6400	0	2000	7798	0	2209	8330	0	2262	10560	0	2631	12110	0	2661	13030	0	2722	14730	0	2838
	18	4250	0	1975	6350	0	2024	7736	0	2250	8260	0	2314	10470	0	2688	12060	0	2776	12990	0	2825	14680	0	2953
	20	4200	0	2000	6300	0	2049	7680	0	2282	8200	0	2351	10400	0	2727	12000	0	2890	12750	0	2936	14600	0	3071
	22	4150	0	2024	6250	0	2073	7600	0	2324	8100	0	2405	10310	0	2784	11940	0	2948	12870	0	3030	14540	0	3182
	24	4100	0	2049	6200	0	2098	7544	0	2365	8040	0	2457	10240	0	2840	11880	0	3047	12810	0	3130	14360	0	3295
1.5+1.8 +1.8+2.5+3.5	16	4300	0	1950	6400	0	2000	7798	0	2209	8330	0	2262	10560	0	2631	12110	0	2661	13030	0	2722	14730	0	2838
	18	4250	0	1975	6350	0	2024	7736	0	2250	8260	0	2314	10470	0	2688	12060	0	2776	12990	0	2825	14680	0	2953
	20	4200	0	2000	6300	0	2049	7680	0	2282	8200	0	2351	10400	0	2727	12000	0	2890	12750	0	2936	14600	0	3071
	22	4150	0	2024	6250	0	2073	7600	0	2324	8100	0	2405	10310	0	2784	11940	0	2948	12870	0	3030	14540	0	3182
	24	4100	0	2049	6200	0	2098	7544	0	2365	8040	0	2457	10240	0	2840	11880	0	3047	12810	0	3130	14360	0	3295
1.5+1.8 +1.8+2.5+4.2	16	4300	0	2040	6400	0	2090	7798	0	2409	8330	0	2462	10560	0	2911	12110	0	2941	13030	0	3002	14730	0	3118
	18	4250	0	2065	6350	0	2114	7736	0	2450	8260	0	2514	10470	0	2968	12060	0	3056	12990	0	3105	14680	0	3233
	20	4200	0	2090	6300	0	2139	7680	0	2484	8200	0	2551	10400	0	3007	12000	0	3130	12750	0	3216	14600	0	3351
	22	4150	0	2114	6250	0	2163	7600	0	2524	8100	0	2605	10310	0	3064	11940	0	3228	12870	0	3310	14540	0	3462
	24	4100	0	2139	6200	0	2188	7544	0	2565	8040	0	2657	10240	0	3120	11880	0	3327	12810	0	3410	14360	0	3575

	INDOOR	OUTDOOR TEMPERATURE (°CDB)																							
	EDB	-15			-10			-7			-5			0			7			10			15		
	°C	TC	SHC	PI	TC	SHC	PI	TC	SHC	PI	TC	SHC	PI	TC	SHC	PI	TC	SHC	PI	TC	SHC	PI	TC	SHC	PI
1.5+1.8 +1.8+2.5+5.0	16	4300	0	2250	6400	0	2300	7798	0	2809	8330	0	2862	10560	0	3561	12110	0	3591	13030	0	3652	14730	0	3768
	18	4250	0	2275	6350	0	2324	6436	0	2850	8260	0	2914	10470	0	3618	12060	0	3706	12990	0	3755	14680	0	3883
	20	4200	0	2300	6300	0	2349	6380	0	2882	8200	0	2951	10400	0	3657	12000	0	3790	12750	0	3866	14600	0	4011
	22	4150	0	2324	6250	0	2373	6300	0	2924	8100	0	3005	10310	0	3714	11940	0	3878	12870	0	3960	14540	0	4112
	24	4100	0	2349	6200	0	2399	6244	0	2965	8040	0	3057	10240	0	3770	11880	0	3977	12810	0	4060	14360	0	4225
1.5+1.8 +1.8+2.5+6.0	16	4300	0	2250	6400	0	2300	7798	0	2809	8330	0	2862	10560	0	3561	12110	0	3591	13030	0	3652	14730	0	3768
	18	4250	0	2275	6350	0	2324	6436	0	2850	8260	0	2914	10470	0	3618	12060	0	3706	12990	0	3755	14680	0	3883
	20	4200	0	2300	6300	0	2349	6380	0	2882	8200	0	2951	10400	0	3657	12000	0	3790	12750	0	3866	14600	0	4011
	22	4150	0	2324	6250	0	2373	6300	0	2924	8100	0	3005	10310	0	3714	11940	0	3878	12870	0	3960	14540	0	4112
	24	4100	0	2349	6200	0	2399	6244	0	2965	8040	0	3057	10240	0	3770	11880	0	3977	12810	0	4060	14360	0	4225
1.5+1.8 +1.8+3.5+3.5	16	4300	0	2010	6400	0	2060	7798	0	2339	8330	0	2392	10560	0	2811	12110	0	2841	13030	0	2902	14730	0	3018
	18	4250	0	2035	6350	0	2084	7736	0	2380	8260	0	2444	10470	0	2868	12060	0	2956	12990	0	3005	14680	0	3133
	20	4200	0	2060	6300	0	2109	7680	0	2412	8200	0	2481	10400	0	2907	12000	0	3030	12750	0	3116	14600	0	3251
	22	4150	0	2084	6250	0	2133	7600	0	2454	8100	0	2535	10310	0	2964	11940	0	3128	12870	0	3210	14540	0	3362
	24	4100	0	2109	6200	0	2158	7544	0	2495	8040	0	2587	10240	0	3020	11880	0	3227	12810	0	3310	14360	0	3475
1.5+1.8 +1.8+3.5+4.2	16	4300	0	2100	6400	0	2150	7798	0	2509	8330	0	2562	10560	0	3071	12110	0	3101	13030	0	3162	14730	0	3278
	18	4250	0	2125	6350	0	2174	7736	0	2550	8260	0	2614	10470	0	3128	12060	0	3216	12990	0	3265	14680	0	3393
	20	4200	0	2150	6300	0	2199	7680	0	2582	8200	0	2651	10400	0	3167	12000	0	3250	12750	0	3376	14600	0	3511
	22	4150	0	2174	6250	0	2223	7600	0	2624	8100	0	2705	10310	0	3224	11940	0	3388	12870	0	3470	14540	0	3622
	24	4100	0	2199	6200	0	2248	7544	0	2665	8040	0	2757	10240	0	3280	11880	0	3487	12810	0	3570	14360	0	3735
1.5+1.8 +1.8+3.5+5.0	16	4300	0	2290	6400	0	2340	7798	0	2889	8330	0	2942	10560	0	3671	12110	0	3701	13030	0	3762	14730	0	3878
	18	4250	0	2315	6350	0	2364	6436	0	2930	8260	0	2994	10470	0	3728	12060	0	3816	12990	0	3865	14680	0	3993
	20	4200	0	2340	6300	0	2389	6380	0	2962	8200	0	3031	10400	0	2767	12000	0	3890	12750	0	3976	14600	0	4121
	22	4150	0	2364	6250	0	2413	6300	0	3004	8100	0	3085	10310	0	3824	11940	0	3988	12870	0	4110	14540	0	4222
	24	4100	0	2389	6200	0	2439	6244	0	3045	8040	0	3134	10240	0	3880	11880	0	4087	12810	0	4170	14360	0	4335
1.5+1.8 +1.8+3.5+6.0	16	4300	0	2290	6400	0	2340	7798	0	2889	8330	0	2942	10560	0	3671	12110	0	3701	13030	0	3762	14730	0	3878
	18	4250	0	2315	6350	0	2364	6436	0	2930	8260	0	2994	10470	0	3728	12060	0	3816	12990	0	3865	14680	0	3993
	20	4200	0	2340	6300	0	2389	6380	0	2962	8200	0	3031	10400	0	2767	12000	0	3890	12750	0	3976	14600	0	4121
	22	4150	0	2364	6250	0	2413	6300	0	3004	8100	0	3085	10310	0	3824	11940	0	3988	12870	0	4110	14540	0	4222
	24	4100	0	2389	6200	0	2439	6244	0	3045	8040	0	3134	10240	0	3880	11880	0	4087	12810	0	4170	14360	0	4335
1.5+1.8 +1.8+4.2+4.2	16	4300	0	2290	6400	0	2340	7798	0	2889	8330	0	2942	10560	0	3671	12110	0	3701	13030	0	3762	14730	0	3878
	18	4250	0	2315	6350	0	2364	6436	0	2930	8260	0	2994	10470	0	3728	12060	0	3816	12990	0	3865	14680	0	3993
	20	4200	0	2340	6300	0	2389	6380	0	2962	8200	0	3031	10400	0	2767	12000	0	3890	12750	0	3976	14600	0	4121
	22	4150	0	2364	6250	0	2413	6300	0	3004	8100	0	3085	10310	0	3824	11940	0	3988	12870	0	4110	14540	0	4222
	24	4100	0	2389	6200	0	2439	6244	0	3045	8040	0	3134	10240	0	3880	11880	0	4087	12810	0	4170	14360	0	4335
1.5+1.8 +1.8+4.2+5.0	16	4300	0	2290	6400	0	2340	7798	0	2889	8330	0	2942	10560	0	3671	12110	0	3701	13030	0	3762	14730	0	3878
	18	4250	0	2315	6350	0	2364	6436	0	2930	8260	0	2994	10470	0	3728	12060	0	3816	12990	0	3865	14680	0	3993
	20	4200	0	2340	6300	0	2389	6380	0	2962	8200	0	3031	10400	0	2767	12000	0	3890	12750	0	3976	14600	0	4121
	22	4150	0	2364	6250	0	2413	6300	0	3004	8100	0	3085	10310	0	3824	11940	0	3988	12870	0	4110	14540	0	4222
	24	4100	0	2389	6200	0	2439	6244	0	3045	8040	0	3134	10240	0	3880	11880	0	4087	12810	0	4170	14360	0	4335

	INDOOR	OUTDOOR TEMPERATURE (°CDB)																							
	EDB	-15			-10			-7			-5			0			7			10			15		
	°C	TC	SHC	PI	TC	SHC	PI	TC	SHC	PI	TC	SHC	PI	TC	SHC	PI	TC	SHC	PI	TC	SHC	PI	TC	SHC	PI
1.5+1.5 +2.5+4.2+4 .2	16	4300	0	2290	6400	0	2340	7798	0	2889	8330	0	2942	10560	0	3671	12110	0	3701	13030	0	3762	14730	0	3878
	18	4250	0	2315	6350	0	2364	6436	0	2930	8260	0	2994	10470	0	3728	12060	0	3816	12990	0	3865	14680	0	3993
	20	4200	0	2340	6300	0	2389	6380	0	2962	8200	0	3031	10400	0	2767	12000	0	3890	12750	0	3976	14600	0	4121
	22	4150	0	2364	6250	0	2413	6300	0	3004	8100	0	3085	10310	0	3824	11940	0	3988	12870	0	4110	14540	0	4222
	24	4100	0	2389	6200	0	2439	6244	0	3045	8040	0	3134	10240	0	3880	11880	0	4087	12810	0	4170	14360	0	4335
1.5+1.5 +2.5+4.2+5 .0	16	4300	0	2290	6400	0	2340	7798	0	2889	8330	0	2942	10560	0	3671	12110	0	3701	13030	0	3762	14730	0	3878
	18	4250	0	2315	6350	0	2364	6436	0	2930	8260	0	2994	10470	0	3728	12060	0	3816	12990	0	3865	14680	0	3993
	20	4200	0	2340	6300	0	2389	6380	0	2962	8200	0	3031	10400	0	2767	12000	0	3890	12750	0	3976	14600	0	4121
	22	4150	0	2364	6250	0	2413	6300	0	3004	8100	0	3085	10310	0	3824	11940	0	3988	12870	0	4110	14540	0	4222
	24	4100	0	2389	6200	0	2439	6244	0	3045	8040	0	3134	10240	0	3880	11880	0	4087	12810	0	4170	14360	0	4335
1.5+1.5 +2.5+5.0+5 .0	16	4300	0	2330	6400	0	2380	7798	0	2969	8730	0	3022	10560	0	3781	12110	0	3811	13030	0	3872	14730	0	3988
	18	4250	0	2355	6350	0	2404	7736	0	3010	8660	0	3074	10470	0	3838	12060	0	3926	12990	0	3975	14680	0	4103
	20	4200	0	2380	6300	0	2429	7680	0	3042	8600	0	3111	10400	0	3877	12000	0	4000	12750	0	4086	14600	0	4221
	22	4150	0	2404	6250	0	2453	7600	0	3084	8500	0	3165	10310	0	3934	11940	0	4098	12870	0	4180	14540	0	4332
	24	4100	0	2429	6200	0	2478	7544	0	3125	8440	0	3217	10240	0	3990	11880	0	4197	12810	0	4280	14360	0	4445
1.5+1.5 +2.5+5.0+6 .0	16	4300	0	2330	6400	0	2380	7798	0	2969	8730	0	3022	10560	0	3781	12110	0	3811	13030	0	3872	14730	0	3988
	18	4250	0	2355	6350	0	2404	7736	0	3010	8660	0	3074	10470	0	3838	12060	0	3926	12990	0	3975	14680	0	4103
	20	4200	0	2380	6300	0	2429	7680	0	3042	8600	0	3111	10400	0	3877	12000	0	4000	12750	0	4086	14600	0	4221
	22	4150	0	2404	6250	0	2453	7600	0	3084	8500	0	3165	10310	0	3934	11940	0	4098	12870	0	4180	14540	0	4332
	24	4100	0	2429	6200	0	2478	7544	0	3125	8440	0	3217	10240	0	3990	11880	0	4197	12810	0	4280	14360	0	4445
1.5+1.5 +3.5+3.5+3 .5	16	4000	0	2120	6100	0	2170	7198	0	2549	7730	0	2602	9560	0	3141	11110	0	3171	12030	0	3232	13730	0	3348
	18	3950	0	2145	6050	0	2194	7136	0	2590	7660	0	2654	9470	0	3198	11060	0	3286	11990	0	3335	13680	0	3463
	20	3900	0	2170	6000	0	2219	7180	0	2622	7600	0	2691	9400	0	3237	11000	0	3360	11750	0	3446	13600	0	3581
	22	3850	0	2194	5950	0	2243	7100	0	2664	7500	0	2745	9310	0	3294	10040	0	3458	11870	0	3540	13540	0	3692
	24	3800	0	2119	5900	0	2268	6944	0	2705	7440	0	2791	9240	0	3350	10880	0	3557	11810	0	3640	13360	0	3802
1.5+1.5 +3.5+3.5+4 .2	16	4000	0	2120	6100	0	2170	7198	0	2549	7730	0	2602	9560	0	3141	11110	0	3171	12030	0	3232	13730	0	3348
	18	3950	0	2145	6050	0	2194	7136	0	2590	7660	0	2654	9470	0	3198	11060	0	3286	11990	0	3335	13680	0	3463
	20	3900	0	2170	6000	0	2219	7180	0	2622	7600	0	2691	9400	0	3237	11000	0	3360	11750	0	3446	13600	0	3581
	22	3850	0	2194	5950	0	2243	7100	0	2664	7500	0	2745	9310	0	3294	10040	0	3458	11870	0	3540	13540	0	3692
	24	3800	0	2119	5900	0	2268	6944	0	2705	7440	0	2791	9240	0	3350	10880	0	3557	11810	0	3640	13360	0	3802
1.5+1.5 +3.5+3.5+5 .0	16	4300	0	2290	6400	0	2340	7798	0	2889	8330	0	2942	10560	0	3671	12110	0	3701	13030	0	3762	14730	0	3878
	18	4250	0	2315	6350	0	2364	6436	0	2930	8260	0	2994	10470	0	3728	12060	0	3816	12990	0	3865	14680	0	3993
	20	4200	0	2340	6300	0	2389	6380	0	2962	8200	0	3031	10400	0	2767	12000	0	3890	12750	0	3976	14600	0	4121
	22	4150	0	2364	6250	0	2413	6300	0	3004	8100	0	3085	10310	0	3824	11940	0	3988	12870	0	4110	14540	0	4222
	24	4100	0	2389	6200	0	2439	6244	0	3045	8040	0	3134	10240	0	3880	11880	0	4087	12810	0	4170	14360	0	4335
1.5+1.5 +3.5+3.5+6 .0	16	4300	0	2290	6400	0	2340	7798	0	2889	8330	0	2942	10560	0	3671	12110	0	3701	13030	0	3762	14730	0	3878
	18	4250	0	2315	6350	0	2364	6436	0	2930	8260	0	2994	10470	0	3728	12060	0	3816	12990	0	3865	14680	0	3993
	20	4200	0	2340	6300	0	2389	6380	0	2962	8200	0	3031	10400	0	2767	12000	0	3890	12750	0	3976	14600	0	4121
	22	4150	0	2364	6250	0	2413	6300	0	3004	8100	0	3085	10310	0	3824	11940	0	3988	12870	0	4110	14540	0	4222
	24	4100	0	2389	6200	0	2439	6244	0	3045	8040	0	3134	10240	0	3880	11880	0	4087	12810	0	4170	14360	0	4335
1.5+1.5 +3.5+4.2+4 .2	16	4300	0	2290	6400	0	2340	7798	0	2889	8330	0	2942	10560	0	3671	12110	0	3701	13030	0	3762	14730	0	3878
	18	4250	0	2315	6350	0	2364	6436	0	2930	8260	0	2994	10470	0	3728	12060	0	3816	12990	0	3865	14680	0	3993
	20	4200	0	2340	6300	0	2389	6380	0	2962	8200	0	3031	10400	0	2767	12000	0	3890	12750	0	3976	14600	0	4121
	22	4150	0	2364	6250	0	2413	6300	0	3004	8100	0	3085	10310	0	3824	11940	0	3988	12870	0	4110	14540	0	4222
	24	4100	0	2389	6200	0	2439	6244	0	3045	8040	0	3134	10240	0	3880	11880	0	4087	12810	0	4170	14360	0	4335
1.5+1.8 +1.8+1.8+1 .8	16	4300	0	1880	6400	0	1930	7798	0	2069	8330	0	2122	10560	0	2411	12110	0	2441	13030	0	2502	14730	0	2618
	18	4250	0	1905	6350	0	1954	7736	0	2110	8260	0	2174	10470	0	2468	12060	0	2556	12990	0	2605	14680	0	2733
	20	4200	0	1930	6300	0	1979	7680	0	2142	8200	0	2211	10400	0	2507	12000	0	2630	12750	0	2716	14600	0	2851
	22	4150	0	1954	6250	0	2003	7600	0	2184	8100	0	2265	10310	0	2564	11940	0	2728	12870	0	2810	14540	0	2962
	24	4100	0	1978	6200	0	2028	7544	0	2225	8040	0	2317	10240	0	2620	11880	0	2827	12810	0	2910	14360	0	3075

	INDOOR	OUTDOOR TEMPERATURE (°CDB)																							
	EDB	-15			-10			-7			-5			0			7			10			15		
	°C	TC	SHC	PI	TC	SHC	PI	TC	SHC	PI	TC	SHC	PI	TC	SHC	PI	TC	SHC	PI	TC	SHC	PI	TC	SHC	PI
1.5+1.8 +2.5+3.5+4 .2	16	4300	0	2100	6400	0	2150	7798	0	2509	8330	0	2562	10560	0	3071	12110	0	3101	13030	0	3162	14730	0	3278
	18	4250	0	2125	6350	0	2174	7736	0	2550	8260	0	2614	10470	0	3128	12060	0	3216	12990	0	3265	14680	0	3393
	20	4200	0	2150	6300	0	2199	7680	0	2582	8200	0	2651	10400	0	3167	12000	0	3290	12750	0	3376	14600	0	3511
	22	4150	0	2174	6250	0	2223	7600	0	2624	8100	0	2705	10310	0	3224	11940	0	3388	12870	0	3470	14540	0	3622
	24	4100	0	2199	6200	0	2248	7544	0	2665	8040	0	2757	10240	0	3280	11880	0	3487	12810	0	3570	14360	0	3735
1.5+1.8 +2.5+3.5+5 .0	16	4300	0	2330	6400	0	2380	7798	0	2969	8730	0	3022	10560	0	3781	12110	0	3811	13030	0	3872	14730	0	3988
	18	4250	0	2355	6350	0	2404	7736	0	3010	8660	0	3074	10470	0	3838	12060	0	3926	12990	0	3975	14680	0	4103
	20	4200	0	2380	6300	0	2429	7680	0	3042	8600	0	3111	10400	0	3877	12000	0	4000	12750	0	4086	14600	0	4221
	22	4150	0	2404	6250	0	2453	7600	0	3084	8500	0	3165	10310	0	3934	11940	0	4098	12870	0	4180	14540	0	4332
	24	4100	0	2429	6200	0	2478	7544	0	3125	8440	0	3217	10240	0	3990	11880	0	4197	12810	0	4280	14360	0	4445
1.5+1.8 +2.5+3.5+6 .0	16	4300	0	2330	6400	0	2380	7798	0	2969	8730	0	3022	10560	0	3781	12110	0	3811	13030	0	3872	14730	0	3988
	18	4250	0	2355	6350	0	2404	7736	0	3010	8660	0	3074	10470	0	3838	12060	0	3926	12990	0	3975	14680	0	4103
	20	4200	0	2380	6300	0	2429	7680	0	3042	8600	0	3111	10400	0	3877	12000	0	4000	12750	0	4086	14600	0	4221
	22	4150	0	2404	6250	0	2453	7600	0	3084	8500	0	3165	10310	0	3934	11940	0	4098	12870	0	4180	14540	0	4332
	24	4100	0	2429	6200	0	2478	7544	0	3125	8440	0	3217	10240	0	3990	11880	0	4197	12810	0	4280	14360	0	4445
1.5+1.8 +2.5+4.2+4 .2	16	4300	0	2330	6400	0	2380	7798	0	2969	8730	0	3022	10560	0	3781	12110	0	3811	13030	0	3872	14730	0	3988
	18	4250	0	2355	6350	0	2404	7736	0	3010	8660	0	3074	10470	0	3838	12060	0	3926	12990	0	3975	14680	0	4103
	20	4200	0	2380	6300	0	2429	7680	0	3042	8600	0	3111	10400	0	3877	12000	0	4000	12750	0	4086	14600	0	4221
	22	4150	0	2404	6250	0	2453	7600	0	3084	8500	0	3165	10310	0	3934	11940	0	4098	12870	0	4180	14540	0	4332
	24	4100	0	2429	6200	0	2478	7544	0	3125	8440	0	3217	10240	0	3990	11880	0	4197	12810	0	4280	14360	0	4445
1.5+1.8 +2.5+4.2+5 .0	16	4300	0	2400	6400	0	2450	7798	0	3109	8730	0	3162	10560	0	3981	12110	0	4011	13030	0	4072	14730	0	4188
	18	4250	0	2425	6350	0	2474	7736	0	3150	8660	0	3214	10470	0	4038	12060	0	4126	12990	0	4175	14680	0	4303
	20	4200	0	2450	6300	0	2499	7680	0	3182	8600	0	3251	10400	0	4077	12000	0	4200	12750	0	4286	14600	0	4421
	22	4150	0	2474	6250	0	2523	7600	0	3224	8500	0	3305	10310	0	4134	11940	0	4298	12870	0	4380	14540	0	4532
	24	4100	0	2499	6200	0	2548	7544	0	3265	8440	0	3357	10240	0	4190	11880	0	4397	12810	0	4480	14360	0	4645
1.5+1.8 +2.5+4.2+6 .0	16	4300	0	2400	6400	0	2450	7798	0	3109	8730	0	3162	10560	0	3981	12110	0	4011	13030	0	4072	14730	0	4188
	18	4250	0	2425	6350	0	2474	7736	0	3150	8660	0	3214	10470	0	4038	12060	0	4126	12990	0	4175	14680	0	4303
	20	4200	0	2450	6300	0	2499	7680	0	3182	8600	0	3251	10400	0	4077	12000	0	4200	12750	0	4286	14600	0	4421
	22	4150	0	2474	6250	0	2523	7600	0	3224	8500	0	3305	10310	0	4134	11940	0	4298	12870	0	4380	14540	0	4532
	24	4100	0	2499	6200	0	2548	7544	0	3265	8440	0	3357	10240	0	4190	11880	0	4397	12810	0	4480	14360	0	4645
1.5+1.8 +3.5+3.5+3 .5	16	4300	0	2100	6400	0	2150	7798	0	2509	8330	0	2562	10560	0	3071	12110	0	3101	13030	0	3162	14730	0	3278
	18	4250	0	2125	6350	0	2174	7736	0	2550	8260	0	2614	10470	0	3128	12060	0	3216	12990	0	3265	14680	0	3393
	20	4200	0	2150	6300	0	2199	7680	0	2582	8200	0	2651	10400	0	3167	12000	0	3280	12750	0	3376	14600	0	3511
	22	4150	0	2174	6250	0	2223	7600	0	2624	8100	0	2705	10310	0	3224	11940	0	3388	12870	0	3470	14540	0	3622
	24	4100	0	2199	6200	0	2248	7544	0	2665	8040	0	2757	10240	0	3280	11880	0	3487	12810	0	3570	14360	0	3735
1.5+1.8 +3.5+3.5+4 .2	16	4000	0	2120	6100	0	2170	7198	0	2549	7730	0	2602	9560	0	3141	11110	0	3171	12030	0	3232	13730	0	3348
	18	3950	0	2145	6050	0	2194	7136	0	2590	7660	0	2654	9470	0	3198	11060	0	3286	11990	0	3335	13680	0	3463
	20	3900	0	2170	6000	0	2219	7180	0	2622	7600	0	2691	9400	0	3237	11000	0	3390	11750	0	3446	13600	0	3581
	22	3850	0	2194	5950	0	2243	7100	0	2664	7500	0	2745	9310	0	3294	10040	0	3458	11870	0	3540	13540	0	3692
	24	3800	0	2119	5900	0	2268	6944	0	2705	7440	0	2791	9240	0	3350	10880	0	3557	11810	0	3640	13360	0	3802
1.5+1.8 +3.5+3.5+5 .0	16	4300	0	2330	6400	0	2380	7798	0	2969	8730	0	3022	10560	0	3781	12110	0	3811	13030	0	3872	14730	0	3988
	18	4250	0	2355	6350	0	2404	7736	0	3010	8660	0	3074	10470	0	3838	12060	0	3926	12990	0	3975	14680	0	4103
	20	4200	0	2380	6300	0	2429	7680	0	3042	8600	0	3111	10400	0	3877	12000	0	4000	12750	0	4086	14600	0	4221
	22	4150	0	2404	6250	0	2453	7600	0	3084	8500	0	3165	10310	0	3934	11940	0	4098	12870	0	4180	14540	0	4332
	24	4100	0	2429	6200	0	2478	7544	0	3125	8440	0	3217	10240	0	3990	11880	0	4197	12810	0	4280	14360	0	4445

	INDOOR	OUTDOOR TEMPERATURE (°CDB)																							
	EDB	-15			-10			-7			-5			0			7			10			15		
	°C	TC	SHC	PI	TC	SHC	PI	TC	SHC	PI	TC	SHC	PI	TC	SHC	PI	TC	SHC	PI	TC	SHC	PI	TC	SHC	PI
1.5+1.8 +3.5+4.2+4.2	16	4300	0	2330	6400	0	2380	7798	0	2969	8730	0	3022	10560	0	3781	12110	0	3811	13030	0	3872	14730	0	3988
	18	4250	0	2355	6350	0	2404	7736	0	3010	8660	0	3074	10470	0	3838	12060	0	3926	12990	0	3975	14680	0	4103
	20	4200	0	2380	6300	0	2429	7680	0	3042	8600	0	3111	10400	0	3877	12000	0	4000	12750	0	4086	14600	0	4221
	22	4150	0	2404	6250	0	2453	7600	0	3084	8500	0	3165	10310	0	3934	11940	0	4098	12870	0	4180	14540	0	4332
	24	4100	0	2429	6200	0	2478	7544	0	3125	8440	0	3217	10240	0	3990	11880	0	4197	12810	0	4280	14360	0	4445
1.5+2.5 +2.5+2.5+2.5	16	4300	0	2040	6400	0	2090	7798	0	2409	8330	0	2462	10560	0	2911	12110	0	2941	13030	0	3002	14730	0	3118
	18	4250	0	2065	6350	0	2114	7736	0	2450	8260	0	2514	10470	0	2968	12060	0	3056	12990	0	3105	14680	0	3233
	20	4200	0	2090	6300	0	2139	7680	0	2484	8200	0	2551	10400	0	3007	12000	0	3090	12750	0	3216	14600	0	3351
	22	4150	0	2114	6250	0	2163	7600	0	2524	8100	0	2605	10310	0	3064	11940	0	3228	12870	0	3310	14540	0	3462
	24	4100	0	2139	6200	0	2188	7544	0	2565	8040	0	2657	10240	0	3120	11880	0	3327	12810	0	3410	14360	0	3575
1.5+2.5 +2.5+2.5+3.5	16	4300	0	2070	6400	0	2120	7798	0	2469	8330	0	2502	10560	0	2971	12110	0	3001	13030	0	3062	14730	0	3178
	18	4250	0	2095	6350	0	2144	7736	0	2490	8260	0	2554	10470	0	3028	12060	0	3116	12990	0	3165	14680	0	3293
	20	4200	0	2120	6300	0	2169	7680	0	2522	8200	0	2591	10400	0	3067	12000	0	3190	12750	0	3276	14600	0	3411
	22	4150	0	2144	6250	0	2193	7600	0	2564	8100	0	2645	10310	0	3124	11940	0	3288	12870	0	3370	14540	0	3522
	24	4100	0	2169	6200	0	2218	7544	0	2605	8040	0	2697	10240	0	3180	11880	0	3387	12810	0	3470	14360	0	3635
1.5+2.5 +2.5+2.5+4.2	16	4300	0	2100	6400	0	2150	7798	0	2509	8330	0	2562	10560	0	3071	12110	0	3101	13030	0	3162	14730	0	3278
	18	4250	0	2125	6350	0	2174	7736	0	2550	8260	0	2614	10470	0	3128	12060	0	3216	12990	0	3265	14680	0	3393
	20	4200	0	2150	6300	0	2199	7680	0	2582	8200	0	2651	10400	0	3167	12000	0	3290	12750	0	3376	14600	0	3511
	22	4150	0	2174	6250	0	2223	7600	0	2624	8100	0	2705	10310	0	3224	11940	0	3388	12870	0	3470	14540	0	3622
	24	4100	0	2199	6200	0	2248	7544	0	2665	8040	0	2757	10240	0	3280	11880	0	3487	12810	0	3570	14360	0	3735
1.5+2.5 +2.5+2.5+5.0	16	4300	0	2330	6400	0	2380	7798	0	2969	8730	0	3022	10560	0	3781	12110	0	3811	13030	0	3872	14730	0	3988
	18	4250	0	2355	6350	0	2404	7736	0	3010	8660	0	3074	10470	0	3838	12060	0	3926	12990	0	3975	14680	0	4103
	20	4200	0	2380	6300	0	2429	7680	0	3042	8600	0	3111	10400	0	3877	12000	0	4000	12750	0	4086	14600	0	4221
	22	4150	0	2404	6250	0	2453	7600	0	3084	8500	0	3165	10310	0	3934	11940	0	4098	12870	0	4180	14540	0	4332
	24	4100	0	2429	6200	0	2478	7544	0	3125	8440	0	3217	10240	0	3990	11880	0	4197	12810	0	4280	14360	0	4445
1.5+2.5 +2.5+2.5+6.0	16	4300	0	2330	6400	0	2380	7798	0	2969	8730	0	3022	10560	0	3781	12110	0	3811	13030	0	3872	14730	0	3988
	18	4250	0	2355	6350	0	2404	7736	0	3010	8660	0	3074	10470	0	3838	12060	0	3926	12990	0	3975	14680	0	4103
	20	4200	0	2380	6300	0	2429	7680	0	3042	8600	0	3111	10400	0	3877	12000	0	4000	12750	0	4086	14600	0	4221
	22	4150	0	2404	6250	0	2453	7600	0	3084	8500	0	3165	10310	0	3934	11940	0	4098	12870	0	4180	14540	0	4332
	24	4100	0	2429	6200	0	2478	7544	0	3125	8440	0	3217	10240	0	3990	11880	0	4197	12810	0	4280	14360	0	4445
1.5+2.5 +2.5+3.5+3.5	16	4300	0	2100	6400	0	2150	7798	0	2509	8330	0	2562	10560	0	3071	12110	0	3101	13030	0	3162	14730	0	3278
	18	4250	0	2125	6350	0	2174	7736	0	2550	8260	0	2614	10470	0	3128	12060	0	3216	12990	0	3265	14680	0	3393
	20	4200	0	2150	6300	0	2199	7680	0	2582	8200	0	2651	10400	0	3167	12000	0	3290	12750	0	3376	14600	0	3511
	22	4150	0	2174	6250	0	2223	7600	0	2624	8100	0	2705	10310	0	3224	11940	0	3388	12870	0	3470	14540	0	3622
	24	4100	0	2199	6200	0	2248	7544	0	2665	8040	0	2757	10240	0	3280	11880	0	3487	12810	0	3570	14360	0	3735
1.5+2.5 +2.5+3.5+4.2	16	4000	0	2120	6100	0	2170	7198	0	2549	7730	0	2602	9560	0	3141	11110	0	3171	12030	0	3232	13730	0	3348
	18	3950	0	2145	6050	0	2194	7136	0	2590	7660	0	2654	9470	0	3198	11060	0	3286	11990	0	3335	13680	0	3463
	20	3900	0	2170	6000	0	2219	7180	0	2622	7600	0	2691	9400	0	3237	11000	0	3390	11750	0	3446	13600	0	3581
	22	3850	0	2194	5950	0	2243	7100	0	2664	7500	0	2745	9310	0	3294	10040	0	3458	11870	0	3540	13540	0	3692
	24	3800	0	2119	5900	0	2268	6944	0	2705	7440	0	2791	9240	0	3350	10880	0	3557	11810	0	3640	13360	0	3802

	INDOOR	OUTDOOR TEMPERATURE (°CDB)																							
	EDB	-15			-10			-7			-5			0			7			10			15		
	°C	TC	SHC	PI	TC	SHC	PI	TC	SHC	PI	TC	SHC	PI	TC	SHC	PI	TC	SHC	PI	TC	SHC	PI	TC	SHC	PI
1.5+2.5+2.5+3.5+5.0	16	4300	0	2360	6400	0	2410	7798	0	3039	8730	0	3092	10560	0	3881	12110	0	3911	13030	0	3972	14730	0	4088
	18	4250	0	2385	6350	0	2434	7736	0	3080	8660	0	3144	10470	0	3938	12060	0	4026	12990	0	4075	14680	0	4203
	20	4200	0	2410	6300	0	2459	7680	0	3112	8600	0	3181	10400	0	3977	12000	0	4100	12750	0	4186	14600	0	4321
	22	4150	0	2434	6250	0	2483	7600	0	3154	8500	0	3235	10310	0	4034	11940	0	4198	12870	0	4280	14540	0	4432
	24	4100	0	2459	6200	0	2508	7544	0	3195	8440	0	3287	10240	0	4090	11880	0	4297	12810	0	4380	14360	0	4545
1.5+2.5+2.5+3.5+6.0	16	4300	0	2360	6400	0	2410	7798	0	3039	8730	0	3092	10560	0	3881	12110	0	3911	13030	0	3972	14730	0	4088
	18	4250	0	2385	6350	0	2434	7736	0	3080	8660	0	3144	10470	0	3938	12060	0	4026	12990	0	4075	14680	0	4203
	20	4200	0	2410	6300	0	2459	7680	0	3112	8600	0	3181	10400	0	3977	12000	0	4100	12750	0	4186	14600	0	4321
	22	4150	0	2434	6250	0	2483	7600	0	3154	8500	0	3235	10310	0	4034	11940	0	4198	12870	0	4280	14540	0	4432
	24	4100	0	2459	6200	0	2508	7544	0	3195	8440	0	3287	10240	0	4090	11880	0	4297	12810	0	4380	14360	0	4545
1.5+2.5+2.5+4.2+4.2	16	4300	0	2330	6400	0	2380	7798	0	2969	8730	0	3022	10560	0	3781	12110	0	3811	13030	0	3872	14730	0	3988
	18	4250	0	2355	6350	0	2404	7736	0	3010	8660	0	3074	10470	0	3838	12060	0	3926	12990	0	3975	14680	0	4103
	20	4200	0	2380	6300	0	2429	7680	0	3042	8600	0	3111	10400	0	3877	12000	0	4000	12750	0	4086	14600	0	4221
	22	4150	0	2404	6250	0	2453	7600	0	3084	8500	0	3165	10310	0	3934	11940	0	4098	12870	0	4180	14540	0	4332
	24	4100	0	2429	6200	0	2478	7544	0	3125	8440	0	3217	10240	0	3990	11880	0	4197	12810	0	4280	14360	0	4445
1.5+2.5+2.5+4.2+5.0	16	4300	0	2330	6400	0	2380	7798	0	2969	8730	0	3022	10560	0	3781	12110	0	3811	13030	0	3872	14730	0	3988
	18	4250	0	2355	6350	0	2404	7736	0	3010	8660	0	3074	10470	0	3838	12060	0	3926	12990	0	3975	14680	0	4103
	20	4200	0	2380	6300	0	2429	7680	0	3042	8600	0	3111	10400	0	3877	12000	0	4000	12750	0	4086	14600	0	4221
	22	4150	0	2404	6250	0	2453	7600	0	3084	8500	0	3165	10310	0	3934	11940	0	4098	12870	0	4180	14540	0	4332
	24	4100	0	2429	6200	0	2478	7544	0	3125	8440	0	3217	10240	0	3990	11880	0	4197	12810	0	4280	14360	0	4445
1.5+2.5+2.5+5.0+5.0	16	4300	0	2330	6400	0	2380	7798	0	2969	8730	0	3022	10560	0	3781	12110	0	3811	13030	0	3872	14730	0	3988
	18	4250	0	2355	6350	0	2404	7736	0	3010	8660	0	3074	10470	0	3838	12060	0	3926	12990	0	3975	14680	0	4103
	20	4200	0	2380	6300	0	2429	7680	0	3042	8600	0	3111	10400	0	3877	12000	0	4000	12750	0	4086	14600	0	4221
	22	4150	0	2404	6250	0	2453	7600	0	3084	8500	0	3165	10310	0	3934	11940	0	4098	12870	0	4180	14540	0	4332
	24	4100	0	2429	6200	0	2478	7544	0	3125	8440	0	3217	10240	0	3990	11880	0	4197	12810	0	4280	14360	0	4445
1.5+2.5+3.5+3.5+3.5	16	4000	0	2120	6100	0	2170	7198	0	2549	7730	0	2602	9560	0	3141	11110	0	3171	12030	0	3232	13730	0	3348
	18	3950	0	2145	6050	0	2194	7136	0	2590	7660	0	2654	9470	0	3198	11060	0	3286	11990	0	3335	13680	0	3463
	20	3900	0	2170	6000	0	2219	7180	0	2622	7600	0	2691	9400	0	3237	11000	0	3390	11750	0	3446	13600	0	3581
	22	3850	0	2194	5950	0	2243	7100	0	2664	7500	0	2745	9310	0	3294	10040	0	3458	11870	0	3540	13540	0	3692
	24	3800	0	2119	5900	0	2268	6944	0	2705	7440	0	2791	9240	0	3350	10880	0	3557	11810	0	3640	13360	0	3802
1.5+2.5+3.5+3.5+4.2	16	4300	0	2160	6400	0	2210	7798	0	2629	8330	0	2682	10560	0	3271	12110	0	3301	13030	0	3362	14730	0	3478
	18	4250	0	2185	6350	0	2234	6436	0	2670	8260	0	2734	10470	0	3328	12060	0	3416	12990	0	3465	14680	0	3593
	20	4200	0	2210	6300	0	2259	6380	0	2702	8200	0	2771	10400	0	3367	12000	0	3490	12750	0	3576	14600	0	3711
	22	4150	0	2234	6250	0	2283	6300	0	2744	8100	0	2825	10310	0	3424	11940	0	3588	12870	0	3670	14540	0	3822
	24	4100	0	2259	6200	0	2309	6244	0	2785	8040	0	2877	10240	0	3480	11880	0	3687	12810	0	3770	14360	0	3935
1.5+2.5+3.5+3.5+5.0	16	4300	0	2160	6400	0	2210	7798	0	2629	8330	0	2682	10560	0	3271	12110	0	3301	13030	0	3362	14730	0	3478
	18	4250	0	2185	6350	0	2234	6436	0	2670	8260	0	2734	10470	0	3328	12060	0	3416	12990	0	3465	14680	0	3593
	20	4200	0	2210	6300	0	2259	6380	0	2702	8200	0	2771	10400	0	3367	12000	0	3490	12750	0	3576	14600	0	3711
	22	4150	0	2234	6250	0	2283	6300	0	2744	8100	0	2825	10310	0	3424	11940	0	3588	12870	0	3670	14540	0	3822
	24	4100	0	2259	6200	0	2309	6244	0	2785	8040	0	2877	10240	0	3480	11880	0	3687	12810	0	3770	14360	0	3935
1.5+2.5+3.5+4.2+4.2	16	4300	0	2160	6400	0	2210	7798	0	2629	8330	0	2682	10560	0	3271	12110	0	3301	13030	0	3362	14730	0	3478
	18	4250	0	2185	6350	0	2234	6436	0	2670	8260	0	2734	10470	0	3328	12060	0	3416	12990	0	3465	14680	0	3593
	20	4200	0	2210	6300	0	2259	6380	0	2702	8200	0	2771	10400	0	3367	12000	0	3490	12750	0	3576	14600	0	3711
	22	4150	0	2234	6250	0	2283	6300	0	2744	8100	0	2825	10310	0	3424	11940	0	3588	12870	0	3670	14540	0	3822
	24	4100	0	2259	6200	0	2309	6244	0	2785	8040	0	2877	10240	0	3480	11880	0	3687	12810	0	3770	14360	0	3935
1.8+1.8+1.8+1.8	16	4300	0	1950	6400	0	2000	7798	0	2209	8330	0	2262	10560	0	2631	12110	0	2661	13030	0	2722	14730	0	2838
	18	4250	0	1975	6350	0	2024	7736	0	2250	8260	0	2314	10470	0	2688	12060	0	2776	12990	0	2825	14680	0	2953
	20	4200	0	2000	6300	0	2049	7680	0	2282	8200	0	2351	10400	0	2727	12000	0	2780	12750	0	2936	14600	0	3071
	22	4150	0	2024	6250	0	2073	7600	0	2324	8100	0	2405	10310	0	2784	11940	0	2948	12870	0	3030	14540	0	3182
	24	4100	0	2049	6200	0	2098	7544	0	2365	8040	0	2457	10240	0	2840	11880	0	3047	12810	0	3130	14360	0	3295

	INDOOR	OUTDOOR TEMPERATURE (°CDB)																							
	EDB	-15			-10			-7			-5			0			7			10			15		
	°C	TC	SHC	PI	TC	SHC	PI	TC	SHC	PI	TC	SHC	PI	TC	SHC	PI	TC	SHC	PI	TC	SHC	PI	TC	SHC	PI
1.8+1.8 +1.8+1.8+4.2	16	4300	0	2070	6400	0	2120	7798	0	2469	8330	0	2502	10560	0	2971	12110	0	3001	13030	0	3062	14730	0	3178
	18	4250	0	2095	6350	0	2144	7736	0	2490	8260	0	2554	10470	0	3028	12060	0	3116	12990	0	3165	14680	0	3293
	20	4200	0	2120	6300	0	2169	7680	0	2522	8200	0	2591	10400	0	3067	12000	0	3230	12750	0	3276	14600	0	3411
	22	4150	0	2144	6250	0	2193	7600	0	2564	8100	0	2645	10310	0	3124	11940	0	3288	12870	0	3370	14540	0	3522
	24	4100	0	2169	6200	0	2218	7544	0	2605	8040	0	2697	10240	0	3180	11880	0	3387	12810	0	3470	14360	0	3635
1.8+1.8 +1.8+1.8+5.0	16	4300	0	2290	6400	0	2340	7798	0	2889	8330	0	2942	10560	0	3671	12110	0	3701	13030	0	3762	14730	0	3878
	18	4250	0	2315	6350	0	2364	6436	0	2930	8260	0	2994	10470	0	3728	12060	0	3816	12990	0	3865	14680	0	3993
	20	4200	0	2340	6300	0	2389	6380	0	2962	8200	0	3031	10400	0	2767	12000	0	3890	12750	0	3976	14600	0	4121
	22	4150	0	2364	6250	0	2413	6300	0	3004	8100	0	3085	10310	0	3824	11940	0	3988	12870	0	4110	14540	0	4222
	24	4100	0	2389	6200	0	2439	6244	0	3045	8040	0	3134	10240	0	3880	11880	0	4087	12810	0	4170	14360	0	4335
1.8+1.8 +1.8+1.8+6.0	16	4300	0	2290	6400	0	2340	7798	0	2889	8330	0	2942	10560	0	3671	12110	0	3701	13030	0	3762	14730	0	3878
	18	4250	0	2315	6350	0	2364	6436	0	2930	8260	0	2994	10470	0	3728	12060	0	3816	12990	0	3865	14680	0	3993
	20	4200	0	2340	6300	0	2389	6380	0	2962	8200	0	3031	10400	0	2767	12000	0	3890	12750	0	3976	14600	0	4121
	22	4150	0	2364	6250	0	2413	6300	0	3004	8100	0	3085	10310	0	3824	11940	0	3988	12870	0	4110	14540	0	4222
	24	4100	0	2389	6200	0	2439	6244	0	3045	8040	0	3134	10240	0	3880	11880	0	4087	12810	0	4170	14360	0	4335
1.8+1.8 +1.8+2.5+2.5	16	4300	0	1950	6400	0	2000	7798	0	2209	8330	0	2262	10560	0	2631	12110	0	2661	13030	0	2722	14730	0	2838
	18	4250	0	1975	6350	0	2024	7736	0	2250	8260	0	2314	10470	0	2688	12060	0	2776	12990	0	2825	14680	0	2953
	20	4200	0	2000	6300	0	2049	7680	0	2282	8200	0	2351	10400	0	2727	12000	0	2890	12750	0	2936	14600	0	3071
	22	4150	0	2024	6250	0	2073	7600	0	2324	8100	0	2405	10310	0	2784	11940	0	2948	12870	0	3030	14540	0	3182
	24	4100	0	2049	6200	0	2098	7544	0	2365	8040	0	2457	10240	0	2840	11880	0	3047	12810	0	3130	14360	0	3295
1.8+1.8 +1.8+2.5+3.5	16	4300	0	1980	6400	0	2030	7798	0	2269	8330	0	2322	10560	0	2731	12110	0	2761	13030	0	2822	14730	0	2938
	18	4250	0	2005	6350	0	2054	7736	0	2310	8260	0	2374	10470	0	2788	12060	0	2876	12990	0	2925	14680	0	3053
	20	4200	0	2030	6300	0	2079	7680	0	2342	8200	0	2411	10400	0	2827	12000	0	2980	12750	0	3036	14600	0	3171
	22	4150	0	2054	6250	0	2103	7600	0	2384	8100	0	2465	10310	0	2884	11940	0	3048	12870	0	3130	14540	0	3282
	24	4100	0	2079	6200	0	2128	7544	0	2425	8040	0	2517	10240	0	2940	11880	0	3147	12810	0	3230	14360	0	3395
1.8+1.8 +1.8+2.5+4.2	16	4000	0	2120	6100	0	2170	7198	0	2549	7730	0	2602	9560	0	3141	11110	0	3171	12030	0	3232	13730	0	3348
	18	3950	0	2145	6050	0	2194	7136	0	2590	7660	0	2654	9470	0	3198	11060	0	3286	11990	0	3335	13680	0	3463
	20	3900	0	2170	6000	0	2219	7180	0	2622	7600	0	2691	9400	0	3237	11000	0	3360	11750	0	3446	13600	0	3581
	22	3850	0	2194	5950	0	2243	7100	0	2664	7500	0	2745	9310	0	3294	10040	0	3458	11870	0	3540	13540	0	3692
	24	3800	0	2119	5900	0	2268	6944	0	2705	7440	0	2791	9240	0	3350	10880	0	3557	11810	0	3640	13360	0	3802
1.8+1.8 +1.8+2.5+5.0	16	4300	0	2330	6400	0	2380	7798	0	2969	8730	0	3022	10560	0	3781	12110	0	3811	13030	0	3872	14730	0	3988
	18	4250	0	2355	6350	0	2404	7736	0	3010	8660	0	3074	10470	0	3838	12060	0	3926	12990	0	3975	14680	0	4103
	20	4200	0	2380	6300	0	2429	7680	0	3042	8600	0	3111	10400	0	3877	12000	0	4000	12750	0	4086	14600	0	4221
	22	4150	0	2404	6250	0	2453	7600	0	3084	8500	0	3165	10310	0	3934	11940	0	4098	12870	0	4180	14540	0	4332
	24	4100	0	2429	6200	0	2478	7544	0	3125	8440	0	3217	10240	0	3990	11880	0	4197	12810	0	4280	14360	0	4445
1.8+1.8 +1.8+2.5+6.0	16	4300	0	2330	6400	0	2380	7798	0	2969	8730	0	3022	10560	0	3781	12110	0	3811	13030	0	3872	14730	0	3988
	18	4250	0	2355	6350	0	2404	7736	0	3010	8660	0	3074	10470	0	3838	12060	0	3926	12990	0	3975	14680	0	4103
	20	4200	0	2380	6300	0	2429	7680	0	3042	8600	0	3111	10400	0	3877	12000	0	4000	12750	0	4086	14600	0	4221
	22	4150	0	2404	6250	0	2453	7600	0	3084	8500	0	3165	10310	0	3934	11940	0	4098	12870	0	4180	14540	0	4332
	24	4100	0	2429	6200	0	2478	7544	0	3125	8440	0	3217	10240	0	3990	11880	0	4197	12810	0	4280	14360	0	4445

	INDOOR	OUTDOOR TEMPERATURE (°CDB)																							
	EDB	-15			-10			-7			-5			0			7			10			15		
	°C	TC	SHC	PI	TC	SHC	PI	TC	SHC	PI	TC	SHC	PI	TC	SHC	PI	TC	SHC	PI	TC	SHC	PI	TC	SHC	PI
1.8+1.8 +1.8+3.5+3.5	16	4300	0	1980	6400	0	2030	7798	0	2269	8330	0	2322	10560	0	2731	12110	0	2761	13030	0	2822	14730	0	2938
	18	4250	0	2005	6350	0	2054	7736	0	2310	8260	0	2374	10470	0	2788	12060	0	2876	12990	0	2925	14680	0	3053
	20	4200	0	2030	6300	0	2079	7680	0	2342	8200	0	2411	10400	0	2827	12000	0	2980	12750	0	3036	14600	0	3171
	22	4150	0	2054	6250	0	2103	7600	0	2384	8100	0	2465	10310	0	2884	11940	0	3048	12870	0	3130	14540	0	3282
	24	4100	0	2079	6200	0	2128	7544	0	2425	8040	0	2517	10240	0	2940	11880	0	3147	12810	0	3230	14360	0	3395
1.8+1.8 +1.8+3.5+4.2	16	4300	0	2160	6400	0	2210	7798	0	2629	8330	0	2682	10560	0	3271	12110	0	3301	13030	0	3362	14730	0	3478
	18	4250	0	2185	6350	0	2234	6436	0	2670	8260	0	2734	10470	0	3328	12060	0	3416	12990	0	3465	14680	0	3593
	20	4200	0	2210	6300	0	2259	6380	0	2702	8200	0	2771	10400	0	3367	12000	0	3480	12750	0	3576	14600	0	3711
	22	4150	0	2234	6250	0	2283	6300	0	2744	8100	0	2825	10310	0	3424	11940	0	3588	12870	0	3670	14540	0	3822
	24	4100	0	2259	6200	0	2309	6244	0	2785	8040	0	2877	10240	0	3480	11880	0	3687	12810	0	3770	14360	0	3935
1.8+1.8 +1.8+3.5+5.0	16	4300	0	2400	6400	0	2450	7798	0	3109	8730	0	3162	10560	0	3981	12110	0	4011	13030	0	4072	14730	0	4188
	18	4250	0	2425	6350	0	2474	7736	0	3150	8660	0	3214	10470	0	4038	12060	0	4126	12990	0	4175	14680	0	4303
	20	4200	0	2450	6300	0	2499	7680	0	3182	8600	0	3251	10400	0	4077	12000	0	4200	12750	0	4286	14600	0	4421
	22	4150	0	2474	6250	0	2523	7600	0	3224	8500	0	3305	10310	0	4134	11940	0	4298	12870	0	4380	14540	0	4532
	24	4100	0	2499	6200	0	2548	7544	0	3265	8440	0	3357	10240	0	4190	11880	0	4397	12810	0	4480	14360	0	4645
1.8+1.8 +1.8+3.5+6.0	16	4300	0	2400	6400	0	2450	7798	0	3109	8730	0	3162	10560	0	3981	12110	0	4011	13030	0	4072	14730	0	4188
	18	4250	0	2425	6350	0	2474	7736	0	3150	8660	0	3214	10470	0	4038	12060	0	4126	12990	0	4175	14680	0	4303
	20	4200	0	2450	6300	0	2499	7680	0	3182	8600	0	3251	10400	0	4077	12000	0	4200	12750	0	4286	14600	0	4421
	22	4150	0	2474	6250	0	2523	7600	0	3224	8500	0	3305	10310	0	4134	11940	0	4298	12870	0	4380	14540	0	4532
	24	4100	0	2499	6200	0	2548	7544	0	3265	8440	0	3357	10240	0	4190	11880	0	4397	12810	0	4480	14360	0	4645
1.8+1.8 +1.8+4.2+4.2	16	4300	0	2220	6400	0	2270	7798	0	2749	8330	0	2802	10560	0	3471	12110	0	3501	13030	0	3562	14730	0	3678
	18	4250	0	2245	6350	0	2294	6436	0	2790	8260	0	2854	10470	0	3528	12060	0	3616	12990	0	3665	14680	0	3793
	20	4200	0	2270	6300	0	2319	6380	0	2822	8200	0	2891	10400	0	3567	12000	0	3680	12750	0	3776	14600	0	3911
	22	4150	0	2294	6250	0	2343	6300	0	2864	8100	0	2945	10310	0	3624	11940	0	3788	12870	0	3870	14540	0	4022
	24	4100	0	2319	6200	0	2369	6244	0	2905	8040	0	2997	10240	0	3680	11880	0	3887	12810	0	3970	14360	0	4135
1.8+1.8 +1.8+4.2+5.0	16	4300	0	2430	6400	0	2480	7798	0	3179	8730	0	3232	10560	0	4081	12110	0	4111	13030	0	4172	14730	0	4288
	18	4250	0	2455	6350	0	2504	7736	0	3220	8660	0	3284	10470	0	4138	12060	0	4226	12990	0	4275	14680	0	4403
	20	4200	0	2480	6300	0	2529	7680	0	3252	8600	0	3324	10400	0	4177	12000	0	4300	12750	0	4386	14600	0	4521
	22	4150	0	2504	6250	0	2553	7600	0	3294	8500	0	3375	10310	0	4234	11940	0	4398	12870	0	4480	14540	0	4632
	24	4100	0	2529	6200	0	2578	7544	0	3335	8440	0	3427	10240	0	4290	11880	0	4497	12810	0	4580	14360	0	4745
1.8+1.8 +1.8+4.2+6.0	16	4300	0	2430	6400	0	2480	7798	0	3179	8730	0	3232	10560	0	4081	12110	0	4111	13030	0	4172	14730	0	4288
	18	4250	0	2455	6350	0	2504	7736	0	3220	8660	0	3284	10470	0	4138	12060	0	4226	12990	0	4275	14680	0	4403
	20	4200	0	2480	6300	0	2529	7680	0	3252	8600	0	3324	10400	0	4177	12000	0	4300	12750	0	4386	14600	0	4521
	22	4150	0	2504	6250	0	2553	7600	0	3294	8500	0	3375	10310	0	4234	11940	0	4398	12870	0	4480	14540	0	4632
	24	4100	0	2529	6200	0	2578	7544	0	3335	8440	0	3427	10240	0	4290	11880	0	4497	12810	0	4580	14360	0	4745
1.8+1.8 +1.8+5.0+5.0	16	4300	0	2460	6400	0	2510	7798	0	3249	8730	0	3305	10560	0	4181	12110	0	4211	13030	0	4272	14730	0	4388
	18	4250	0	2485	6350	0	2534	7736	0	3290	8660	0	3354	10470	0	4238	12060	0	4326	12990	0	4375	14680	0	4506
	20	4200	0	2510	6300	0	2559	7680	0	3322	8600	0	3394	10400	0	4277	12000	0	4400	12750	0	4486	14600	0	4621
	22	4150	0	2534	6250	0	2583	7600	0	3364	8500	0	3445	10310	0	4334	11940	0	4498	12870	0	4580	14540	0	4732
	24	4100	0	2559	6200	0	2608	7544	0	3405	8440	0	3497	10240	0	4390	11880	0	4597	12810	0	4680	14360	0	4845
1.8+1.8 +1.8+5.0+6.0	16	4300	0	2460	6400	0	2510	7798	0	3249	8730	0	3305	10560	0	4181	12110	0	4211	13030	0	4272	14730	0	4388
	18	4250	0	2485	6350	0	2534	7736	0	3290	8660	0	3354	10470	0	4238	12060	0	4326	12990	0	4375	14680	0	4506
	20	4200	0	2510	6300	0	2559	7680	0	3322	8600	0	3394	10400	0	4277	12000	0	4400	12750	0	4486	14600	0	4621
	22	4150	0	2534	6250	0	2583	7600	0	3364	8500	0	3445	10310	0	4334	11940	0	4498	12870	0	4580	14540	0	4732
	24	4100	0	2559	6200	0	2608	7544	0	3405	8440	0	3497	10240	0	4390	11880	0	4597	12810	0	4680	14360	0	4845
1.8+1.8 +2.5+2.5+2.5	16	4300	0	1980	6400	0	2030	7798	0	2269	8330	0	2322	10560	0	2731	12110	0	2761	13030	0	2822	14730	0	2938
	18	4250	0	2005	6350	0	2054	7736	0	2310	8260	0	2374	10470	0	2788	12060	0	2876	12990	0	2925	14680	0	3053
	20	4200	0	2030	6300	0	2079	7680	0	2342	8200	0	2411	10400	0	2827	12000	0	2950	12750	0	3036	14600	0	3171
	22	4150	0	2054	6250	0	2103	7600	0	2384	8100	0	2465	10310	0	2884	11940	0	3048	12870	0	3130	14540	0	3282
	24	4100	0	2079	6200	0	2128	7544	0	2425	8040	0	2517	10240	0	2940	11880	0	3147	12810	0	3230	14360	0	3395

	INDOOR	OUTDOOR TEMPERATURE (°CDB)																							
	EDB	-15			-10			-7			-5			0			7			10			15		
	°C	TC	SHC	PI	TC	SHC	PI	TC	SHC	PI	TC	SHC	PI	TC	SHC	PI	TC	SHC	PI	TC	SHC	PI	TC	SHC	PI
1.8+1.8 +2.5+2.5+3.5	16	4300	0	2040	6400	0	2090	7798	0	2409	8330	0	2462	10560	0	2911	12110	0	2941	13030	0	3002	14730	0	3118
	18	4250	0	2065	6350	0	2114	7736	0	2450	8260	0	2514	10470	0	2968	12060	0	3056	12990	0	3105	14680	0	3233
	20	4200	0	2090	6300	0	2139	7680	0	2484	8200	0	2551	10400	0	3007	12000	0	3130	12750	0	3216	14600	0	3351
	22	4150	0	2114	6250	0	2163	7600	0	2524	8100	0	2605	10310	0	3064	11940	0	3228	12870	0	3310	14540	0	3462
	24	4100	0	2139	6200	0	2188	7544	0	2565	8040	0	2657	10240	0	3120	11880	0	3327	12810	0	3410	14360	0	3575
1.8+1.8 +2.5+2.5+4.2	16	4300	0	2160	6400	0	2210	7798	0	2629	8330	0	2682	10560	0	3271	12110	0	3301	13030	0	3362	14730	0	3478
	18	4250	0	2185	6350	0	2234	6436	0	2670	8260	0	2734	10470	0	3328	12060	0	3416	12990	0	3465	14680	0	3593
	20	4200	0	2210	6300	0	2259	6380	0	2702	8200	0	2771	10400	0	3367	12000	0	3450	12750	0	3576	14600	0	3711
	22	4150	0	2234	6250	0	2283	6300	0	2744	8100	0	2825	10310	0	3424	11940	0	3588	12870	0	3670	14540	0	3822
	24	4100	0	2259	6200	0	2309	6244	0	2785	8040	0	2877	10240	0	3480	11880	0	3687	12810	0	3770	14360	0	3935
1.8+1.8 +2.5+2.5+5.0	16	4300	0	2360	6400	0	2410	7798	0	3039	8730	0	3092	10560	0	3881	12110	0	3911	13030	0	3972	14730	0	4088
	18	4250	0	2385	6350	0	2434	7736	0	3080	8660	0	3144	10470	0	3938	12060	0	4026	12990	0	4075	14680	0	4203
	20	4200	0	2410	6300	0	2459	7680	0	3112	8600	0	3181	10400	0	3977	12000	0	4100	12750	0	4186	14600	0	4321
	22	4150	0	2434	6250	0	2483	7600	0	3154	8500	0	3235	10310	0	4034	11940	0	4198	12870	0	4280	14540	0	4432
	24	4100	0	2459	6200	0	2508	7544	0	3195	8440	0	3287	10240	0	4090	11880	0	4297	12810	0	4380	14360	0	4545
1.8+1.8 +2.5+2.5+6.0	16	4300	0	2360	6400	0	2410	7798	0	3039	8730	0	3092	10560	0	3881	12110	0	3911	13030	0	3972	14730	0	4088
	18	4250	0	2385	6350	0	2434	7736	0	3080	8660	0	3144	10470	0	3938	12060	0	4026	12990	0	4075	14680	0	4203
	20	4200	0	2410	6300	0	2459	7680	0	3112	8600	0	3181	10400	0	3977	12000	0	4100	12750	0	4186	14600	0	4321
	22	4150	0	2434	6250	0	2483	7600	0	3154	8500	0	3235	10310	0	4034	11940	0	4198	12870	0	4280	14540	0	4432
	24	4100	0	2459	6200	0	2508	7544	0	3195	8440	0	3287	10240	0	4090	11880	0	4297	12810	0	4380	14360	0	4545
1.8+1.8 +2.5+3.5+3.5	16	4300	0	2040	6400	0	2090	7798	0	2409	8330	0	2462	10560	0	2911	12110	0	2941	13030	0	3002	14730	0	3118
	18	4250	0	2065	6350	0	2114	7736	0	2450	8260	0	2514	10470	0	2968	12060	0	3056	12990	0	3105	14680	0	3233
	20	4200	0	2090	6300	0	2139	7680	0	2484	8200	0	2551	10400	0	3007	12000	0	3130	12750	0	3216	14600	0	3351
	22	4150	0	2114	6250	0	2163	7600	0	2524	8100	0	2605	10310	0	3064	11940	0	3228	12870	0	3310	14540	0	3462
	24	4100	0	2139	6200	0	2188	7544	0	2565	8040	0	2657	10240	0	3120	11880	0	3327	12810	0	3410	14360	0	3575
1.8+1.8 +2.5+3.5+4.2	16	4300	0	2190	6400	0	2240	7798	0	2689	8330	0	2742	10560	0	3371	12110	0	3401	13030	0	3462	14730	0	3578
	18	4250	0	2215	6350	0	2264	6436	0	2730	8260	0	2794	10470	0	3428	12060	0	3516	12990	0	3565	14680	0	3693
	20	4200	0	2240	6300	0	2289	6380	0	2762	8200	0	2831	10400	0	3467	12000	0	3580	12750	0	3676	14600	0	3811
	22	4150	0	2264	6250	0	2313	6300	0	2804	8100	0	2885	10310	0	3524	11940	0	3688	12870	0	3770	14540	0	3922
	24	4100	0	2289	6200	0	2339	6244	0	2845	8040	0	2937	10240	0	3580	11880	0	3787	12810	0	3870	14360	0	4035
1.8+1.8 +2.5+3.5+5.0	16	4300	0	2430	6400	0	2480	7798	0	3179	8730	0	3232	10560	0	4081	12110	0	4111	13030	0	4172	14730	0	4288
	18	4250	0	2455	6350	0	2504	7736	0	3220	8660	0	3284	10470	0	4138	12060	0	4226	12990	0	4275	14680	0	4403
	20	4200	0	2480	6300	0	2529	7680	0	3252	8600	0	3324	10400	0	4177	12000	0	4300	12750	0	4386	14600	0	4521
	22	4150	0	2504	6250	0	2553	7600	0	3294	8500	0	3375	10310	0	4234	11940	0	4398	12870	0	4480	14540	0	4632
	24	4100	0	2529	6200	0	2578	7544	0	3335	8440	0	3427	10240	0	4290	11880	0	4497	12810	0	4580	14360	0	4745
1.8+1.8 +2.5+4.2+4.2	16	4300	0	2430	6400	0	2480	7798	0	3179	8730	0	3232	10560	0	4081	12110	0	4111	13030	0	4172	14730	0	4288
	18	4250	0	2455	6350	0	2504	7736	0	3220	8660	0	3284	10470	0	4138	12060	0	4226	12990	0	4275	14680	0	4403
	20	4200	0	2480	6300	0	2529	7680	0	3252	8600	0	3324	10400	0	4177	12000	0	4300	12750	0	4386	14600	0	4521
	22	4150	0	2504	6250	0	2553	7600	0	3294	8500	0	3375	10310	0	4234	11940	0	4398	12870	0	4480	14540	0	4632
	24	4100	0	2529	6200	0	2578	7544	0	3335	8440	0	3427	10240	0	4290	11880	0	4497	12810	0	4580	14360	0	4745

	INDOOR	OUTDOOR TEMPERATURE (°CDB)																							
	EDB	-15			-10			-7			-5			0			7			10			15		
	°C	TC	SHC	PI	TC	SHC	PI	TC	SHC	PI	TC	SHC	PI	TC	SHC	PI	TC	SHC	PI	TC	SHC	PI	TC	SHC	PI
1.8+1.8 +2.5+4.2+5 .0	16	4300	0	2460	6400	0	2510	7798	0	3249	8730	0	3302	10560	0	4181	12110	0	4211	13030	0	4272	14730	0	4388
	18	4250	0	2485	6350	0	2534	7736	0	3290	8660	0	3354	10470	0	4238	12060	0	4326	12990	0	4375	14680	0	4506
	20	4200	0	2510	6300	0	2559	7680	0	3322	8600	0	3394	10400	0	4277	12000	0	4400	12750	0	4486	14600	0	4621
	22	4150	0	2534	6250	0	2583	7600	0	3364	8500	0	3445	10310	0	4334	11940	0	4498	12870	0	4580	14540	0	4732
	24	4100	0	2559	6200	0	2608	7544	0	3405	8440	0	3497	10240	0	4390	11880	0	4597	12810	0	4680	14360	0	4845
1.8+1.8 +2.5+4.2+6 .0	16	4300	0	2460	6400	0	2510	7798	0	3249	8730	0	3302	10560	0	4181	12110	0	4211	13030	0	4272	14730	0	4388
	18	4250	0	2485	6350	0	2534	7736	0	3290	8660	0	3354	10470	0	4238	12060	0	4326	12990	0	4375	14680	0	4506
	20	4200	0	2510	6300	0	2559	7680	0	3322	8600	0	3394	10400	0	4277	12000	0	4400	12750	0	4486	14600	0	4621
	22	4150	0	2534	6250	0	2583	7600	0	3364	8500	0	3445	10310	0	4334	11940	0	4498	12870	0	4580	14540	0	4732
	24	4100	0	2559	6200	0	2608	7544	0	3405	8440	0	3497	10240	0	4390	11880	0	4597	12810	0	4680	14360	0	4845
1.8+1.8 +2.5+2.5+5 .0	16	4300	0	2460	6400	0	2510	7798	0	3249	8730	0	3302	10560	0	4181	12110	0	4211	13030	0	4272	14730	0	4388
	18	4250	0	2485	6350	0	2534	7736	0	3290	8660	0	3354	10470	0	4238	12060	0	4326	12990	0	4375	14680	0	4506
	20	4200	0	2510	6300	0	2559	7680	0	3322	8600	0	3394	10400	0	4277	12000	0	4400	12750	0	4486	14600	0	4621
	22	4150	0	2534	6250	0	2583	7600	0	3364	8500	0	3445	10310	0	4334	11940	0	4498	12870	0	4580	14540	0	4732
	24	4100	0	2559	6200	0	2608	7544	0	3405	8440	0	3497	10240	0	4390	11880	0	4597	12810	0	4680	14360	0	4845
1.8+1.8 +3.5+3.5+3 .5	16	4300	0	2100	6400	0	2150	7798	0	2509	8330	0	2562	10560	0	3071	12110	0	3101	13030	0	3162	14730	0	3278
	18	4250	0	2125	6350	0	2174	7736	0	2550	8260	0	2614	10470	0	3128	12060	0	3216	12990	0	3265	14680	0	3393
	20	4200	0	2150	6300	0	2199	7680	0	2582	8200	0	2651	10400	0	3167	12000	0	3280	12750	0	3376	14600	0	3511
	22	4150	0	2174	6250	0	2223	7600	0	2624	8100	0	2705	10310	0	3224	11940	0	3388	12870	0	3470	14540	0	3622
	24	4100	0	2199	6200	0	2248	7544	0	2665	8040	0	2757	10240	0	3280	11880	0	3487	12810	0	3570	14360	0	3735
1.8+1.8 +3.5+3.5+4 .2	16	4300	0	2190	6400	0	2240	7798	0	2689	8330	0	2742	10560	0	3371	12110	0	3401	13030	0	3462	14730	0	3578
	18	4250	0	2215	6350	0	2264	6436	0	2730	8260	0	2794	10470	0	3428	12060	0	3516	12990	0	3565	14680	0	3693
	20	4200	0	2240	6300	0	2289	6380	0	2762	8200	0	2831	10400	0	3467	12000	0	3590	12750	0	3676	14600	0	3811
	22	4150	0	2264	6250	0	2313	6300	0	2804	8100	0	2885	10310	0	3524	11940	0	3688	12870	0	3770	14540	0	3922
	24	4100	0	2289	6200	0	2339	6244	0	2845	8040	0	2937	10240	0	3580	11880	0	3787	12810	0	3870	14360	0	4035
1.8+1.8 +3.5+3.5+5 .0	16	4300	0	2190	6400	0	2240	7798	0	2689	8330	0	2742	10560	0	3371	12110	0	3401	13030	0	3462	14730	0	3578
	18	4250	0	2215	6350	0	2264	6436	0	2730	8260	0	2794	10470	0	3428	12060	0	3516	12990	0	3565	14680	0	3693
	20	4200	0	2240	6300	0	2289	6380	0	2762	8200	0	2831	10400	0	3467	12000	0	3590	12750	0	3676	14600	0	3811
	22	4150	0	2264	6250	0	2313	6300	0	2804	8100	0	2885	10310	0	3524	11940	0	3688	12870	0	3770	14540	0	3922
	24	4100	0	2289	6200	0	2339	6244	0	2845	8040	0	2937	10240	0	3580	11880	0	3787	12810	0	3870	14360	0	4035
1.8+1.8 +3.5+3.5+6 .0	16	4300	0	2190	6400	0	2240	7798	0	2689	8330	0	2742	10560	0	3371	12110	0	3401	13030	0	3462	14730	0	3578
	18	4250	0	2215	6350	0	2264	6436	0	2730	8260	0	2794	10470	0	3428	12060	0	3516	12990	0	3565	14680	0	3693
	20	4200	0	2240	6300	0	2289	6380	0	2762	8200	0	2831	10400	0	3467	12000	0	3590	12750	0	3676	14600	0	3811
	22	4150	0	2264	6250	0	2313	6300	0	2804	8100	0	2885	10310	0	3524	11940	0	3688	12870	0	3770	14540	0	3922
	24	4100	0	2289	6200	0	2339	6244	0	2845	8040	0	2937	10240	0	3580	11880	0	3787	12810	0	3870	14360	0	4035
1.8+1.8 +3.5+4.2+4 .2	16	4300	0	2400	6400	0	2450	7798	0	3109	8730	0	3162	10560	0	3981	12110	0	4011	13030	0	4072	14730	0	4188
	18	4250	0	2425	6350	0	2474	7736	0	3150	8660	0	3214	10470	0	4038	12060	0	4126	12990	0	4175	14680	0	4303
	20	4200	0	2450	6300	0	2499	7680	0	3182	8600	0	3251	10400	0	4077	12000	0	4200	12750	0	4286	14600	0	4421
	22	4150	0	2474	6250	0	2523	7600	0	3224	8500	0	3305	10310	0	4134	11940	0	4298	12870	0	4380	14540	0	4532
	24	4100	0	2499	6200	0	2548	7544	0	3265	8440	0	3357	10240	0	4190	11880	0	4397	12810	0	4480	14360	0	4645
1.8+1.8 +3.5+4.2+5 .0	16	4300	0	2400	6400	0	2450	7798	0	3109	8730	0	3162	10560	0	3981	12110	0	4011	13030	0	4072	14730	0	4188
	18	4250	0	2425	6350	0	2474	7736	0	3150	8660	0	3214	10470	0	4038	12060	0	4126	12990	0	4175	14680	0	4303
	20	4200	0	2450	6300	0	2499	7680	0	3182	8600	0	3251	10400	0	4077	12000	0	4200	12750	0	4286	14600	0	4421
	22	4150	0	2474	6250	0	2523	7600	0	3224	8500	0	3305	10310	0	4134	11940	0	4298	12870	0	4380	14540	0	4532
	24	4100	0	2499	6200	0	2548	7544	0	3265	8440	0	3357	10240	0	4190	11880	0	4397	12810	0	4480	14360	0	4645
1.8+2.5 +2.5+2.5+2 .5	16	4300	0	2040	6400	0	2090	7798	0	2409	8330	0	2462	10560	0	2911	12110	0	2941	13030	0	3002	14730	0	3118
	18	4250	0	2065	6350	0	2114	7736	0	2450	8260	0	2514	10470	0	2968	12060	0	3056	12990	0	3105	14680	0	3233
	20	4200	0	2090	6300	0	2139	7680	0	2484	8200	0	2551	10400	0	3007	12000	0	3130	12750	0	3216	14600	0	3351
	22	4150	0	2114	6250	0	2163	7600	0	2524	8100	0	2605	10310	0	3064	11940	0	3228	12870	0	3310	14540	0	3462
	24	4100	0	2139	6200	0	2188	7544	0	2565	8040	0	2657	10240	0	3120	11880	0	3327	12810	0	3410	14360	0	3575

	INDOOR	OUTDOOR TEMPERATURE (°CDB)																							
	EDB	-15			-10			-7			-5			0			7			10			15		
	°C	TC	SHC	PI	TC	SHC	PI	TC	SHC	PI	TC	SHC	PI	TC	SHC	PI	TC	SHC	PI	TC	SHC	PI	TC	SHC	PI
1.8+2.5 +2.5+2.5+6 .0	16	4300	0	2430	6400	0	2480	7798	0	3179	8730	0	3232	10560	0	4081	12110	0	4111	13030	0	4172	14730	0	4288
	18	4250	0	2455	6350	0	2504	7736	0	3220	8660	0	3284	10470	0	4138	12060	0	4226	12990	0	4275	14680	0	4403
	20	4200	0	2480	6300	0	2529	7680	0	3252	8600	0	3324	10400	0	4177	12000	0	4300	12750	0	4386	14600	0	4521
	22	4150	0	2504	6250	0	2553	7600	0	3294	8500	0	3375	10310	0	4234	11940	0	4398	12870	0	4480	14540	0	4632
	24	4100	0	2529	6200	0	2578	7544	0	3335	8440	0	3427	10240	0	4290	11880	0	4497	12810	0	4580	14360	0	4745
1.8+2.5 +2.5+3.5+3 .5	16	4300	0	2100	6400	0	2150	7798	0	2509	8330	0	2562	10560	0	3071	12110	0	3101	13030	0	3162	14730	0	3278
	18	4250	0	2125	6350	0	2174	7736	0	2550	8260	0	2614	10470	0	3128	12060	0	3216	12990	0	3265	14680	0	3393
	20	4200	0	2150	6300	0	2199	7680	0	2582	8200	0	2651	10400	0	3167	12000	0	3300	12750	0	3376	14600	0	3511
	22	4150	0	2174	6250	0	2223	7600	0	2624	8100	0	2705	10310	0	3224	11940	0	3388	12870	0	3470	14540	0	3622
	24	4100	0	2199	6200	0	2248	7544	0	2665	8040	0	2757	10240	0	3280	11880	0	3487	12810	0	3570	14360	0	3735
1.8+2.5 +2.5+3.5+4 .2	16	4300	0	2220	6400	0	2270	7798	0	2749	8330	0	2802	10560	0	3471	12110	0	3501	13030	0	3562	14730	0	3678
	18	4250	0	2245	6350	0	2294	6436	0	2790	8260	0	2854	10470	0	3528	12060	0	3616	12990	0	3665	14680	0	3793
	20	4200	0	2270	6300	0	2319	6380	0	2822	8200	0	2891	10400	0	3567	12000	0	3690	12750	0	3776	14600	0	3911
	22	4150	0	2294	6250	0	2343	6300	0	2864	8100	0	2945	10310	0	3624	11940	0	3788	12870	0	3870	14540	0	4022
	24	4100	0	2319	6200	0	2369	6244	0	2905	8040	0	2997	10240	0	3680	11880	0	3887	12810	0	3970	14360	0	4135
1.8+2.5 +2.5+3.5+5 .0	16	4300	0	2430	6400	0	2480	7798	0	3179	8730	0	3232	10560	0	4081	12110	0	4111	13030	0	4172	14730	0	4288
	18	4250	0	2455	6350	0	2504	7736	0	3220	8660	0	3284	10470	0	4138	12060	0	4226	12990	0	4275	14680	0	4403
	20	4200	0	2480	6300	0	2529	7680	0	3252	8600	0	3324	10400	0	4177	12000	0	4300	12750	0	4386	14600	0	4521
	22	4150	0	2504	6250	0	2553	7600	0	3294	8500	0	3375	10310	0	4234	11940	0	4398	12870	0	4480	14540	0	4632
	24	4100	0	2529	6200	0	2578	7544	0	3335	8440	0	3427	10240	0	4290	11880	0	4497	12810	0	4580	14360	0	4745
1.8+2.5 +2.5+3.5+6 .0	16	4300	0	2430	6400	0	2480	7798	0	3179	8730	0	3232	10560	0	4081	12110	0	4111	13030	0	4172	14730	0	4288
	18	4250	0	2455	6350	0	2504	7736	0	3220	8660	0	3284	10470	0	4138	12060	0	4226	12990	0	4275	14680	0	4403
	20	4200	0	2480	6300	0	2529	7680	0	3252	8600	0	3324	10400	0	4177	12000	0	4300	12750	0	4386	14600	0	4521
	22	4150	0	2504	6250	0	2553	7600	0	3294	8500	0	3375	10310	0	4234	11940	0	4398	12870	0	4480	14540	0	4632
	24	4100	0	2529	6200	0	2578	7544	0	3335	8440	0	3427	10240	0	4290	11880	0	4497	12810	0	4580	14360	0	4745
1.8+2.5 +2.5+4.2+4 .2	16	4300	0	2430	6400	0	2480	7798	0	3179	8730	0	3232	10560	0	4081	12110	0	4111	13030	0	4172	14730	0	4288
	18	4250	0	2455	6350	0	2504	7736	0	3220	8660	0	3284	10470	0	4138	12060	0	4226	12990	0	4275	14680	0	4403
	20	4200	0	2480	6300	0	2529	7680	0	3252	8600	0	3324	10400	0	4177	12000	0	4300	12750	0	4386	14600	0	4521
	22	4150	0	2504	6250	0	2553	7600	0	3294	8500	0	3375	10310	0	4234	11940	0	4398	12870	0	4480	14540	0	4632
	24	4100	0	2529	6200	0	2578	7544	0	3335	8440	0	3427	10240	0	4290	11880	0	4497	12810	0	4580	14360	0	4745
1.8+2.5 +2.5+4.2+5 .0	16	4300	0	2430	6400	0	2480	7798	0	3179	8730	0	3232	10560	0	4081	12110	0	4111	13030	0	4172	14730	0	4288
	18	4250	0	2455	6350	0	2504	7736	0	3220	8660	0	3284	10470	0	4138	12060	0	4226	12990	0	4275	14680	0	4403
	20	4200	0	2480	6300	0	2529	7680	0	3252	8600	0	3324	10400	0	4177	12000	0	4300	12750	0	4386	14600	0	4521
	22	4150	0	2504	6250	0	2553	7600	0	3294	8500	0	3375	10310	0	4234	11940	0	4398	12870	0	4480	14540	0	4632
	24	4100	0	2529	6200	0	2578	7544	0	3335	8440	0	3427	10240	0	4290	11880	0	4497	12810	0	4580	14360	0	4745
1.8+2.5 +3.5+3.5+3 .5	16	4300	0	2330	6400	0	2380	7798	0	2969	8730	0	3022	10560	0	3781	12110	0	3811	13030	0	3872	14730	0	3988
	18	4250	0	2355	6350	0	2404	7736	0	3010	8660	0	3074	10470	0	3838	12060	0	3926	12990	0	3975	14680	0	4103
	20	4200	0	2380	6300	0	2429	7680	0	3042	8600	0	3111	10400	0	3877	12000	0	4000	12750	0	4086	14600	0	4221
	22	4150	0	2404	6250	0	2453	7600	0	3084	8500	0	3165	10310	0	3934	11940	0	4098	12870	0	4180	14540	0	4332
	24	4100	0	2429	6200	0	2478	7544	0	3125	8440	0	3217	10240	0	3990	11880	0	4197	12810	0	4280	14360	0	4445
1.8+2.5 +3.5+3.5+4 .2	16	4300	0	2360	6400	0	2410	7798	0	3039	8730	0	3092	10560	0	3881	12110	0	3911	13030	0	3972	14730	0	4088
	18	4250	0	2385	6350	0	2434	7736	0	3080	8660	0	3144	10470	0	3938	12060	0	4026	12990	0	4075	14680	0	4203
	20	4200	0	2410	6300	0	2459	7680	0	3112	8600	0	3181	10400	0	3977	12000	0	4100	12750	0	4186	14600	0	4321
	22	4150	0	2434	6250	0	2483	7600	0	3154	8500	0	3235	10310	0	4034	11940	0	4198	12870	0	4280	14540	0	4432
	24	4100	0	2459	6200	0	2508	7544	0	3195	8440	0	3287	10240	0	4090	11880	0	4297	12810	0	4380	14360	0	4545
1.8+2.5 +3.5+3.5+5 .0	16	4300	0	2360	6400	0	2410	7798	0	3039	8730	0	3092	10560	0	3881	12110	0	3911	13030	0	3972	14730	0	4088
	18	4250	0	2385	6350	0	2434	7736	0	3080	8660	0	3144	10470	0	3938	12060	0	4026	12990	0	4075	14680	0	4203
	20	4200	0	2410	6300	0	2459	7680	0	3112	8600	0	3181	10400	0	3977	12000	0	4100	12750	0	4186	14600	0	4321
	22	4150	0	2434	6250	0	2483	7600	0	3154	8500	0	3235	10310	0	4034	11940	0	4198	12870	0	4280	14540	0	4432
	24	4100	0	2459	6200	0	2508	7544	0	3195	8440	0	3287	10240	0	4090	11880	0	4297	12810	0	4380	14360	0	4545
1.8+2.5 +3.5+4.2+4 .2	16	4300	0	2360	6400	0	2410	7798	0	3039	8730	0	3092	10560	0	3881	12110	0	3911	13030	0	3972	14730	0	4088
	18	4250	0	2385	6350	0	2434	7736	0	3080	8660	0	3144	10470	0	3938	12060	0	4026	12990	0	4075	14680	0	4203
	20	4200	0	2410	6300	0	2459	7680	0	3112	8600	0	3181	10400	0	3977	12000	0	4100	12750	0	4186	14600	0	4321
	22	4150	0	2434	6250	0	2483	7600	0	3154	8500	0	3235	10310	0	4034	11940	0	4198	12870	0	4280	14540	0	4432
	24	4100	0	2459	6200	0	2508	7544	0	3195	8440	0	3287	10240	0	4090	11880	0	4297	12810	0	4380	14360	0	4545
2.5+2.5 +2.5+2.5+2 .5	16	4300	0	2100	6400	0	2150	7798	0	2509	8330	0	2562	10560	0	3071	12110	0	3101	13030	0	3162	14730	0	3278
	18	4250	0	2125	6350	0	2174	7736	0	2550	8260	0	2614	10470	0	3128	12060	0	3216	12990	0	3265	14680	0	3393
	20	4200	0	2150	6300	0	2199	7680	0	2582	8200	0	2651	10400	0	3167	12000	0	3300	12750	0	3376	14600	0	3511
	22	4150	0	2174	6250	0	2223	7600	0	2624	8100	0	2705	10310	0	3224	11940	0	3388	12870	0	3470	14540	0	3622
	24	4100	0	2199	6200	0	2248	7544	0	2665	8040	0	2757	10240	0	3280	11880	0	3487	12810	0	3570	14360	0	3735

	INDOOR	OUTDOOR TEMPERATURE (°CDB)																							
	EDB	-15			-10			-7			-5			0			7			10			15		
	°C	TC	SHC	PI	TC	SHC	PI	TC	SHC	PI	TC	SHC	PI	TC	SHC	PI	TC	SHC	PI	TC	SHC	PI	TC	SHC	PI
2.5+2.5+2.5+3.5	16	4300	0	2190	6400	0	2240	7798	0	2689	8330	0	2742	10560	0	3371	12110	0	3401	13030	0	3462	14730	0	3578
	18	4250	0	2215	6350	0	2264	6436	0	2730	8260	0	2794	10470	0	3428	12060	0	3516	12990	0	3565	14680	0	3693
	20	4200	0	2240	6300	0	2289	6380	0	2762	8200	0	2831	10400	0	3467	12000	0	3580	12750	0	3676	14600	0	3811
	22	4150	0	2264	6250	0	2313	6300	0	2804	8100	0	2885	10310	0	3524	11940	0	3688	12870	0	3770	14540	0	3922
	24	4100	0	2289	6200	0	2339	6244	0	2845	8040	0	2937	10240	0	3580	11880	0	3787	12810	0	3870	14360	0	4035
2.5+2.5+2.5+4.2	16	4300	0	2400	6400	0	2450	7798	0	3109	8730	0	3162	10560	0	3981	12110	0	4011	13030	0	4072	14730	0	4188
	18	4250	0	2425	6350	0	2474	7736	0	3150	8660	0	3214	10470	0	4038	12060	0	4126	12990	0	4175	14680	0	4303
	20	4200	0	2450	6300	0	2499	7680	0	3182	8600	0	3251	10400	0	4077	12000	0	4200	12750	0	4286	14600	0	4421
	22	4150	0	2474	6250	0	2523	7600	0	3224	8500	0	3305	10310	0	4134	11940	0	4298	12870	0	4380	14540	0	4532
	24	4100	0	2499	6200	0	2548	7544	0	3265	8440	0	3357	10240	0	4190	11880	0	4397	12810	0	4480	14360	0	4645
2.5+2.5+2.5+5.0	16	4300	0	2500	6400	0	2550	7798	0	3309	8730	0	3362	10560	0	4281	12110	0	4311	13030	0	4372	14730	0	4488
	18	4250	0	2525	6350	0	2574	7736	0	3350	8660	0	3414	10470	0	4338	12060	0	4426	12990	0	4475	14680	0	4603
	20	4200	0	2550	6300	0	2599	7680	0	3382	8600	0	3451	10400	0	4377	12000	0	4500	12750	0	4586	14600	0	4721
	22	4150	0	2574	6250	0	2623	7600	0	3424	8500	0	3505	10310	0	4434	11940	0	4598	12870	0	4680	14540	0	4832
	24	4100	0	2599	6200	0	2648	7544	0	3465	8440	0	3557	10240	0	4490	11880	0	4697	12810	0	4780	14360	0	4945
2.5+2.5+2.5+6.0	16	4300	0	2500	6400	0	2550	7798	0	3309	8730	0	3362	10560	0	4281	12110	0	4311	13030	0	4372	14730	0	4488
	18	4250	0	2525	6350	0	2574	7736	0	3350	8660	0	3414	10470	0	4338	12060	0	4426	12990	0	4475	14680	0	4603
	20	4200	0	2550	6300	0	2599	7680	0	3382	8600	0	3451	10400	0	4377	12000	0	4500	12750	0	4586	14600	0	4721
	22	4150	0	2574	6250	0	2623	7600	0	3424	8500	0	3505	10310	0	4434	11940	0	4598	12870	0	4680	14540	0	4832
	24	4100	0	2599	6200	0	2648	7544	0	3465	8440	0	3557	10240	0	4490	11880	0	4697	12810	0	4780	14360	0	4945
2.5+2.5+2.5+3.5+3.5	16	4300	0	2400	6400	0	2450	7798	0	3109	8730	0	3162	10560	0	3981	12110	0	4011	13030	0	4072	14730	0	4188
	18	4250	0	2425	6350	0	2474	7736	0	3150	8660	0	3214	10470	0	4038	12060	0	4126	12990	0	4175	14680	0	4303
	20	4200	0	2450	6300	0	2499	7680	0	3182	8600	0	3251	10400	0	4077	12000	0	4200	12750	0	4286	14600	0	4421
	22	4150	0	2474	6250	0	2523	7600	0	3224	8500	0	3305	10310	0	4134	11940	0	4298	12870	0	4380	14540	0	4532
	24	4100	0	2499	6200	0	2548	7544	0	3265	8440	0	3357	10240	0	4190	11880	0	4397	12810	0	4480	14360	0	4645
2.5+2.5+2.5+3.5+4.2	16	4300	0	2500	6400	0	2550	7798	0	3309	8730	0	3362	10560	0	4281	12110	0	4311	13030	0	4372	14730	0	4488
	18	4250	0	2525	6350	0	2574	7736	0	3350	8660	0	3414	10470	0	4338	12060	0	4426	12990	0	4475	14680	0	4603
	20	4200	0	2550	6300	0	2599	7680	0	3382	8600	0	3451	10400	0	4377	12000	0	4500	12750	0	4586	14600	0	4721
	22	4150	0	2574	6250	0	2623	7600	0	3424	8500	0	3505	10310	0	4434	11940	0	4598	12870	0	4680	14540	0	4832
	24	4100	0	2599	6200	0	2648	7544	0	3465	8440	0	3557	10240	0	4490	11880	0	4697	12810	0	4780	14360	0	4945
2.5+2.5+3.5+3.5+3.5	16	4300	0	2500	6400	0	2550	7798	0	3309	8730	0	3362	10560	0	4281	12110	0	4311	13030	0	4372	14730	0	4488
	18	4250	0	2525	6350	0	2574	7736	0	3350	8660	0	3414	10470	0	4338	12060	0	4426	12990	0	4475	14680	0	4603
	20	4200	0	2550	6300	0	2599	7680	0	3382	8600	0	3451	10400	0	4377	12000	0	4500	12750	0	4586	14600	0	4721
	22	4150	0	2574	6250	0	2623	7600	0	3424	8500	0	3505	10310	0	4434	11940	0	4598	12870	0	4680	14540	0	4832
	24	4100	0	2599	6200	0	2648	7544	0	3465	8440	0	3557	10240	0	4490	11880	0	4697	12810	0	4780	14360	0	4945
2.5+2.5+3.5+3.5+4.2	16	4300	0	2500	6400	0	2550	7798	0	3309	8730	0	3362	10560	0	4281	12110	0	4311	13030	0	4372	14730	0	4488
	18	4250	0	2525	6350	0	2574	7736	0	3350	8660	0	3414	10470	0	4338	12060	0	4426	12990	0	4475	14680	0	4603
	20	4200	0	2550	6300	0	2599	7680	0	3382	8600	0	3451	10400	0	4377	12000	0	4500	12750	0	4586	14600	0	4721
	22	4150	0	2574	6250	0	2623	7600	0	3424	8500	0	3505	10310	0	4434	11940	0	4598	12870	0	4680	14540	0	4832
	24	4100	0	2599	6200	0	2648	7544	0	3465	8440	0	3557	10240	0	4490	11880	0	4697	12810	0	4780	14360	0	4945

3.3. CORRECTION FACTORS ACCORDING TO PIPING LENGTH

Correction Factor for **Cooling Capacity** according to Piping Length

The cooling capacity should be corrected according to the following formula:

CCA = CC x F

CCA: Actual Corrected Cooling Capacity (kcal/h)
CC: Cooling Capacity in the Performance Table (kcal/h)
F: Correction Factor Based on the Equivalent Piping Length

Correction Factor for **Heating Capacity** according to Piping Length

The heating capacity should be corrected according to the following formula:

HCA= HC x F

HCA: Actual Corrected Heating Capacity (kcal/h)
HC: Heating Capacity in the Performance Table (kcal/h)
F: Correction Factor Based on the Equivalent Piping Length

The correction factors are shown in the following figure.

Equivalent Piping Length for:

- One 90º Elbow is 0.5m.
- One 180º Curve is 1.5m.

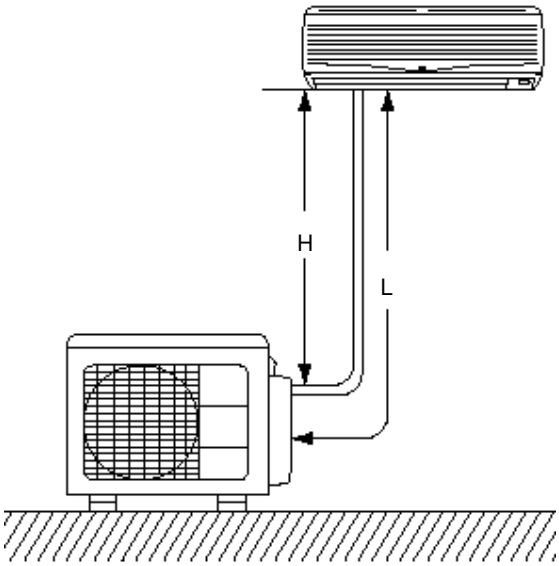

H: Vertical Distance Between Indoor Unit and Outdoor Units in Meters

L: Actual One-Way Piping Length Between Indoor Unit and Outdoor Unit in Meters

EL: Equivalent Total Distance Between Indoor Unit and Outdoor Unit in Meters (Equivalent One-Way Piping Length)

Model Multi Outdoor 10.0kW

RAM-110NP5E

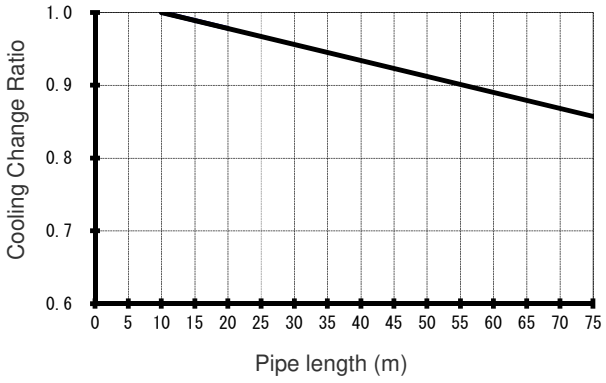

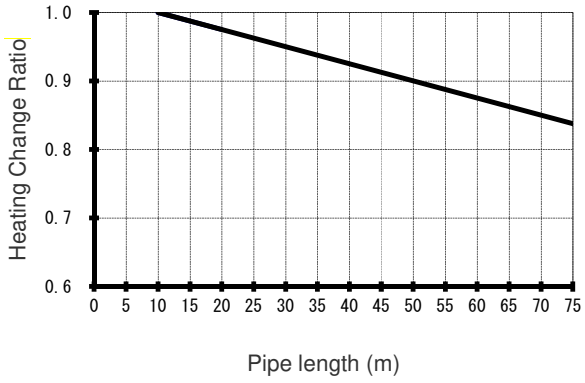

3.4. CORRECTION FACTORS ACCORDING TO DEFROSTING OPERATION

The heating capacity in the preceding paragraph, excludes the condition of the frost or the defrosting operation period. In consideration of the frost or the defrosting operation, the heating capacity is corrected by the equation below.

Corrected heating capacity = Defrost Correction factor x unit capacity

OUTDOOR TEMPERATURE (°CDB)	-15	-10	-7	-5	0	7	10	15
Correction factor (humidity rate85% RH)	0.95	0.95	0.89	0.85	0.81	1.0	1.0	1.0

Correction Factor

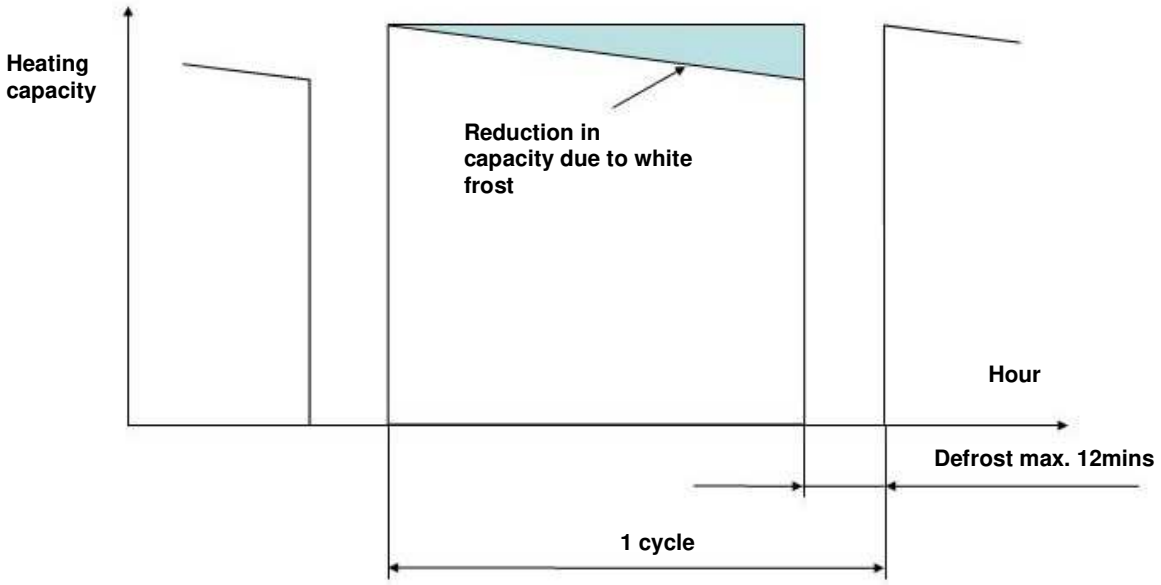

NOTE:
The correction factor is not valid for special conditions such as snowfall or operation in a transitional period.

3.5.1. **RAM-110NP5E**

Whichever indoor units are installed, cooling and heating capacity depends on how many and which indoor units are operating at the same time.
[1] Capacity loss due to white frost and defrost operation is not included.

	POSSIBLECOMBINATIONSTO OPERATE		COOLING							HEATING						
			CAPACITY RATING(kW) (RANGE) (kW) (RANGE)	TOTAL	OUTDOOR UNIT POWER CONSUMPTION (W)	OUTDOOR UNIT AMPERE (A) at 220V	230V	240V	COP	CAPACITY RATING(kW) (RANGE) (kW) (RANGE)	TOTAL	OUTDOOR UNIT POWER CONSUMPTION (W)	OUTDOOR UNIT AMPERE (A) at 220V	230V	240V	COP
ONE UNITS	1.5	1.5	1.50 1.00 ~ 1.60	1.50	420 (320-480)	1.93	1.84	1.77	3.57	2.00 1.50 ~ 2.20	2.00	620 (360-850)	2.85	2.72	2.61	3.23
	1.8	1.8	1.80 1.70 ~ 2.00	1.80	500 (320-610)	2.30	2.20	2.10	3.60	2.50 2.00 ~ 3.00	2.50	780 (360-920)	3.58	3.43	3.28	3.21
	2.5	2.5	2.50 1.70 ~ 2.80	2.50	700 (320-860)	3.21	3.07	2.95	3.57	3.40 2.00 ~ 4.00	3.40	1140 (360-1340)	5.23	5.01	4.80	2.98
	3.5	3.5	3.50 1.70 ~ 3.90	3.50	1040 (320-1270)	4.78	4.57	4.38	3.37	4.30 2.00 ~ 5.20	4.30	1420 (360-1720)	6.52	6.24	5.98	3.03
	4.2	4.2	4.20 1.70 ~ 4.20	4.20	1250 (320-1270)	5.74	5.49	5.26	3.36	5.20 2.00 ~ 6.50	4.30	1420 (360-1720)	6.52	6.24	5.98	3.03
	5.0	5.0	5.00 1.70 ~ 5.50	5.00	1540 (320-1860)	7.07	6.76	6.48	3.25	6.50 2.00 ~ 7.30	6.50	2300 (360-2580)	10.56	10.10	9.68	2.83
	6.0	6.0	6.00 1.70 ~ 6.60	6.00	1630 (320-1860)	7.48	7.16	6.86	3.68	7.50 2.00 ~ 8.20	7.50	2300 (360-2950)	10.56	10.10	9.68	3.26
TWO UNITS	3.0	1.5 + 1.5	1.50 + 1.50 2.40 ~ 3.50	3.00	850 (500-1020)	3.90	3.73	3.58	3.53	2.00 + 2.00 2.70 ~ 4.70	4.00	950 (500-1140)	4.36	4.17	4.00	4.21
	3.3	1.5 + 1.8	1.50 + 1.80 2.40 ~ 3.80	3.30	950 (500-1140)	4.36	4.17	4.00	3.47	2.00 ~ 2.50 2.70 ~ 5.20	4.50	1180 (500-1416)	5.42	5.18	4.97	3.81
	4.0	1.5 + 2.5	1.50 + 2.50 2.40 ~ 4.50	4.00	1150 (500-1500)	5.28	5.05	4.84	3.48	2.00 ~ 3.40 2.70 ~ 6.10	5.40	1320 (500-1584)	6.06	5.80	5.56	4.09
	5.0	1.5 + 3.5	1.50 + 3.50 2.40 ~ 5.50	5.00	1550 (500-1860)	7.12	6.81	6.52	3.23	2.00 ~ 4.30 2.70 ~ 7.00	6.30	1550 (500-1860)	7.12	6.81	6.52	4.06
	5.7	1.5 + 4.2	1.50 + 4.20 2.40 ~ 6.20	5.70	1700 (500-1860)	7.81	7.47	7.15	3.35	2.00 ~ 5.20 2.70 ~ 7.90	7.20	1850 (500-2560)	8.49	8.12	7.79	3.89
	6.5	1.5 + 5.0	1.50 + 5.00 2.40 ~ 7.00	6.50	2100 (500-2520)	9.64	9.22	8.84	3.10	2.00 ~ 6.50 2.70 ~ 9.20	8.50	2800 (500-3000)	12.86	12.30	11.78	3.04
	7.5	1.5 + 6.0	1.50 + 6.00 2.40 ~ 8.00	7.50	2100 (500-2520)	9.64	9.22	8.84	3.57	2.00 ~ 7.50 2.70 ~ 10.20	9.50	2800 (500-3000)	12.86	12.30	11.78	3.39
	3.6	1.8 + 1.8	1.80 + 1.80 2.40 ~ 4.00	3.60	1000 (500-1160)	4.59	4.39	4.21	3.60	2.50 ~ 2.50 2.70 ~ 5.70	5.00	1240 (500-1710)	5.69	5.45	5.22	4.03
	4.3	1.8 + 2.5	1.80 + 2.50 2.40 ~ 4.70	4.30	1200 (500-1590)	5.51	5.27	5.05	3.58	2.50 ~ 3.40 2.70 ~ 6.60	5.90	1530 (500-1990)	7.02	6.72	6.44	3.86
	5.3	1.8 + 3.5	1.80 + 3.50 2.40 ~ 5.80	5.30	1590 (500-1900)	7.30	6.98	6.69	3.33	2.50 ~ 4.30 2.70 ~ 7.50	6.80	1870 (500-2320)	8.59	8.21	7.87	3.64
	6.0	1.8 + 4.2	1.59 + 3.71 2.40 ~ 5.80	6.00	1760 (500-1900)	8.08	7.73	7.41	3.41	2.50 ~ 5.20 2.70 ~ 8.40	7.70	2200 (500-2880)	10.10	9.66	9.26	3.50
	6.8	1.8 + 5.0	1.80 + 5.00 2.40 ~ 7.50	6.80	2370 (500-2970)	10.88	10.41	9.97	2.87	2.50 ~ 6.50 2.70 ~ 9.70	9.00	2970 (500-3400)	13.64	13.04	12.50	3.03
	7.8	1.8 + 6.0	1.80 + 6.00 2.40 ~ 8.20	7.80	2370 (500-3120)	10.88	10.41	9.97	3.29	2.50 ~ 7.50 2.70 ~ 10.70	10.00	2970 (500-3400)	13.64	13.04	12.50	3.37
	5.0	2.5 + 2.5	2.50 + 2.50 2.40 ~ 5.50	5.00	1370 (500-1640)	6.29	6.02	5.77	3.65	3.40 ~ 3.40 2.70 ~ 7.50	6.80	1920 (500-2250)	8.82	8.43	8.08	3.54
	6.0	2.5 + 3.5	2.50 + 3.50 2.40 ~ 6.60	6.00	2000 (500-2400)	9.18	8.78	8.42	3.00	3.40 ~ 4.30 2.70 ~ 8.40	7.70	2280 (500-2590)	10.47	10.01	9.60	3.38
	6.7	2.5 + 4.2	2.50 + 4.20 2.40 ~ 7.00	6.70	2000 (500-2400)	9.18	8.78	8.42	3.35	3.40 ~ 5.20 2.70 ~ 9.30	8.60	2400 (500-3110)	11.02	10.54	10.10	3.58
	7.5	2.5 + 5.0	2.50 + 5.00 2.40 ~ 8.00	7.50	2580 (500-3270)	11.85	11.33	10.86	2.91	3.40 ~ 6.50 2.70 ~ 10.60	9.90	3220 (500-3400)	14.78	14.14	13.55	3.07
	8.5	2.5 + 6.0	2.50 + 6.00 2.40 ~ 9.00	8.50	2580 (500-3270)	11.85	11.33	10.86	3.29	3.40 ~ 7.50 2.70 ~ 11.60	10.90	3220 (500-3400)	14.78	14.14	13.55	3.39
	7.0	3.5 + 3.5	3.50 + 3.50 2.40 ~ 7.80	7.00	2490 (450-2990)	11.43	10.94	10.48	2.81	4.30 ~ 4.30 2.70 ~ 9.30	8.60	2460 (500-2860)	11.29	10.80	10.35	3.50
	7.7	3.5 + 4.2	3.50 + 4.20 2.40 ~ 8.10	7.70	2490 (500-2990)	11.43	10.94	10.48	3.09	4.30 ~ 5.20 2.70 ~ 10.20	9.50	2680 (500-3320)	12.30	11.77	11.28	3.54
	8.5	3.5 + 5.0	3.50 + 5.00 2.40 ~ 8.80	8.50	2700 (500-3270)	12.40	11.86	11.36	3.15	4.30 ~ 6.50 2.70 ~ 11.50	10.80	3290 (500-3600)	15.11	14.45	13.85	3.28
	9.5	3.5 + 6.0	3.50 + 6.00 2.40 ~ 10.10	9.50	2700 (500-3270)	12.40	11.86	11.36	3.52	4.30 ~ 7.50 2.70 ~ 12.50	11.80	3290 (500-3600)	15.11	14.45	13.85	3.59
	8.4	4.2 + 4.2	4.20 + 4.20 2.40 ~ 8.80	8.40	2700 (500-3270)	12.40	11.86	11.36	3.11	5.20 ~ 5.20 2.70 ~ 11.10	10.40	2460 (500-2860)	11.29	10.80	10.35	4.23
	9.2	4.2 + 5.0	4.20 + 5.00 2.40 ~ 9.70	9.20	2900 (500-3470)	13.31	12.74	12.21	3.17	5.20 ~ 6.50 2.70 ~ 12.40	11.70	3440 (500-3800)	15.79	15.11	14.48	3.40
	10.2	4.2 + 6.0	3.99 + 5.70 2.40 ~ 10.59	10.00	2900 (500-3470)	13.31	12.74	12.21	3.45	4.91 ~ 7.09 2.70 ~ 12.70	12.00	3440 (500-3800)	15.79	15.11	14.48	3.49
	10.0	5.0 + 5.0	5.00 + 5.00 2.40 ~ 11.00	10.00	3100 (500-3670)	14.23	13.61	13.05	3.23	6.00 ~ 6.00 2.70 ~ 12.70	12.00	3440 (500-3800)	15.79	15.11	14.48	3.49
	11.0	5.0 + 6.0	4.55 + 5.45 2.40 ~ 11.00	10.00	3200 (500-3780)	14.69	14.05	13.47	3.13	5.57 ~ 6.43 2.70 ~ 12.70	12.00	3440 (500-3800)	15.79	15.11	14.48	3.49
	12.0	6.0 + 6.0	5.00 + 5.00 2.40 ~ 11.00	10.00	3300 (500-3870)	15.15	14.49	13.89	3.03	6.00 ~ 6.00 2.70 ~ 12.70	12.00	3440 (500-3800)	15.79	15.11	14.48	3.49
THREE UNITS	4.5	1.5 + 1.5 + 1.5	1.50 + 1.50 + 1.50 2.70 ~ 5.00	4.50	1250 (510-1500)	5.74	5.49	5.26	3.60	2.00 ~ 2.00 + 2.00 2.90 ~ 6.70	6.00	1540 (520-1848)	7.07	6.76	6.48	3.90
	4.8	1.5 + 1.5 + 1.8	1.50 + 1.50 + 1.80 2.70 ~ 5.30	4.80	1350 (510-1620)	6.20	5.93	5.68	3.56	2.00 ~ 2.00 + 2.50 2.90 ~ 7.20	6.50	1800 (520-2160)	8.26	7.91	7.58	3.61
	5.5	1.5 + 1.5 + 2.5	1.50 + 1.50 + 2.50 2.70 ~ 6.00	5.50	1550 (510-1988)	7.12	6.81	6.52	3.55	2.00 ~ 2.00 + 3.40 2.90 ~ 8.10	7.40	2010 (520-2412)	9.23	8.83	8.46	3.68
	6.5	1.5 + 1.5 + 3.5	1.50 + 1.50 + 3.50 2.70 ~ 7.00	6.50	2100 (510-2676)	9.64	9.22	8.84	3.10	2.00 ~ 2.00 + 4.30 2.90 ~ 9.00	8.30	2420 (520-2904)	11.11	10.63	10.19	3.43
	7.2	1.5 + 1.5 + 4.2	1.50 + 1.50 + 4.20 2.70 ~ 7.80	7.20	2150 (510-2676)	9.87	9.44	9.05	3.35	2.00 ~ 2.00 + 5.20 2.90 ~ 9.90	9.20	2580 (520-2904)	11.85	11.33	10.86	3.57
	8.0	1.5 + 1.5 + 5.0	1.50 + 1.50 + 5.00 2.70 ~ 8.50	8.00	2400 (510-2876)	11.02	10.54	10.10	3.33	2.00 ~ 2.00 + 6.50 2.90 ~ 11.20	10.50	3030 (520-3448)	13.91	13.31	12.75	3.47
	9.0	1.5 + 1.5 + 6.0	1.50 + 1.50 + 6.00 2.70 ~ 9.50	9.00	2470 (510-2876)	11.34	10.85	10.40	3.64	2.00 ~ 2.00 + 7.50 2.90 ~ 12.20	11.50	3030 (520-3448)	13.91	13.31	12.75	3.80
	5.1	1.5 + 1.8 + 1.8	1.50 + 1.80 + 1.80 2.70 ~ 5.60	5.10	1450 (510-1620)	6.66	6.37	6.10	3.52	2.00 ~ 2.50 + 2.50 2.90 ~ 7.70	7.00	1880 (520-2280)	8.63	8.26	7.91	3.72
	5.8	1.5 + 1.8 + 2.5	1.50 + 1.80 + 2.50 2.70 ~ 6.30	5.80	1650 (510-1820)	7.58	7.25	6.94	3.52	2.00 ~ 2.50 + 3.40 2.90 ~ 8.60	7.90	2130 (520-2616)	9.78	9.35	8.96	3.71
	6.8	1.5 + 1.8 + 3.5	1.50 + 1.80 + 3.50 2.70 ~ 7.30	6.80	1850 (510-2844)	8.49	8.12	7.79	3.68	2.00 ~ 2.50 + 4.30 2.90 ~ 9.50	8.80	2580 (520-3030)	11.85	11.33	10.86	3.41
	7.5	1.5 + 1.8 + 4.2	1.50 + 1.80 + 4.20 2.70 ~ 8.00	7.50	2200 (510-2844)	10.10	9.66	9.26	3.41	2.00 ~ 2.50 + 5.20 2.90 ~ 10.40	9.70	2630 (520-3030)	12.08	11.55	11.07	3.69
	8.3	1.5 + 1.8 + 5.0	1.50 + 1.80 + 5.00 2.70 ~ 9.10	8.30	2400 (510-2844)	11.02	10.54	10.10	3.46	2.00 ~ 2.50 + 6.50 2.90 ~ 11.70	11.00	3150 (520-3690)	14.46	13.83	13.26	3.49
	9.3	1.5 + 1.8 + 6.0	1.50 + 1.80 + 6.00 2.70 ~ 10.20	9.30	2550 (510-2844)	11.71	11.20	10.73	3.65	2.00 ~ 2.50 + 7.50 2.90 ~ 12.70	12.00	3150 (520-3690)	14.46	13.83	13.26	3.81
	6.5	1.5 + 2.5 + 2.5	1.50 + 2.50 + 2.50 2.70 ~ 7.00	6.50	1800 (510-2520)	8.26	7.91	7.58	3.61	2.00 ~ 3.40 + 3.40 2.90 ~ 9.50	8.80	2350 (520-3030)	10.79	10.32	9.89	3.74
	7.5	1.5 + 2.5 + 3.5	1.50 + 2.50 + 3.50 2.70 ~ 8.30	7.50	2100 (510-3096)	9.64	9.22	8.84	3.57	2.00 ~ 3.40 + 4.30 2.90 ~ 10.40	9.70	2620 (520-3030)	12.03	11.51	11.03	3.70
	8.2	1.5 + 2.5 + 4.2	1.50 + 2.50 + 4.20 2.70 ~ 8.70	8.20	2200 (510-3360)	10.10	9.66	9.26	3.73	2.00 ~ 3.40 + 5.20 2.90 ~ 11.30	10.60	2750 (520-3030)	12.63	12.08	11.57	3.85
	9.0	1.5 + 2.5 + 5.0	1.50 + 2.50 + 5.00 2.70 ~ 9.90	9.00	2680 (510-3360)	12.30	11.77	11.28	3.36	2.00 ~ 3.40 + 6.50 2.90 ~ 12.60	11.90	3290 (520-3690)	15.11	14.45	13.85	3.62
	10.0	1.5 + 2.5 + 6.0	1.50 + 2.50 + 6.00 2.70 ~ 10.60	10.00	2780 (510-3360)	12.76	12.21	11.70	3.60	1.86 ~ 3.16 + 6.98 2.90 ~ 12.70	12.00	3290 (520-3690)	15.11	14.45	13.85	3.65
	8.5	1.5 + 3.5 + 3.5	1.50 + 3.50 + 3.50 2.70 ~ 9.40	8.50	2560 (510-3360)	11.75	11.24	10.77	3.32	2.00 ~ 4.30 + 4.30 2.90 ~ 11.30	10.60	2990 (520-3360)	13.73	13.13	12.58	3.55
	9.2	1.5 + 3.5 + 4.2	1.50 + 3.50 + 4.20 2.70 ~ 9.70	9.20	2700 (510-3460)	12.40	11.86	11.36	3.41	2.00 ~ 4.30 + 5.20 2.90 ~ 12.20	11.50	2990 (520-3360)	13.73	13.13	12.58	3.85
	10.0	1.5 + 3.5 + 5.0	1.50 + 3.50 + 5.00 2.70 ~ 10.70	10.00	3000 (510-3460)	13.77	13.18	12.63	3.33	1.88 ~ 4.03 + 6.09 2.90 ~ 12.70	12.00	3290 (520-3690)	15.11	14.45	13.85	3.65
	11.0	1.5 + 3.5 + 6.0	1.36 + 3.18 + 5.46 2.70 ~ 11.00	10.00	3100 (510-3460)	14.23	13.61	13.05	3.23	1.74 ~ 3.74 + 6.52 2.90 ~ 12.70	12.00	3290 (520-3690)	15.11	14.45	13.85	3.65
	9.9	1.5 + 4.2 + 4.2	1.50 + 4.20 + 4.20 2.70 ~ 10.50	9.90	3000 (510-3460)	13.77	13.18	12.63	3.30	1.94 ~ 5.03 + 5.03 2.90 ~ 12.70	12.00	3290 (520-3690)	15.11	14.45	13.85	3.65
	10.7	1.5 + 4.2 + 5.0	1.40 + 3.93 + 4.67 2.70 ~ 10.56	10.00	3210 (510-3460)	14.74	14.10	13.51	3.12	1.75 ~ 4.55 + 5.69 2.90 ~ 12.70	12.00	3390 (520-3690)	15.56	14.89	14.27	3.54
	11.7	1.5 + 4.2 + 6.0	1.28 + 3.59 + 5.13 2.70 ~ 10.60	10.00	3300 (510-3800)	15.15	14.49	13.89	3.03	1.63 ~ 4.24 + 6.12 2.90 ~ 12.70	12.00	3390 (520-3690)	15.56	14.89	14.27	3.54
	11.5	1.5 + 5.0 + 5.0	1.30 + 4.35 + 4.35 2.70 ~ 10.70	10.00	3500 (510-3800)	16.07	15.37	14.73	2.86	1.60 ~ 5.20 + 5.20 2.90 ~ 12.70	12.00	3490 (520-3890)	16.02	15.33	14.69	3.44
	12.5	1.5 + 5.0 + 6.0	1.20 + 4.00 + 4.80 2.70 ~ 10.80	10.00	3600 (510-3800)	16.53	15.81	15.15	2.78	1.50 ~ 4.88 + 5.63 2.90 ~ 12.70	12.00	3490 (520-3890)	16.02	15.33	14.69	3.44
	13.5	1.5 + 6.0 + 6.0	1.11 + 4.44 + 4.44 2.70 ~ 10.96	10.00	3680 (510-3800)	16.90	16.16	15.49	2.72	1.41 ~ 5.29 + 5.29 2.90 ~ 12.70	12.00	3490 (520-3890)	16.02	15.33	14.69	3.44
	5.4	1.8 + 1.8 + 1.8	1.80 + 1.80 + 1.80 2.70 ~ 6.00	5.40	1480 (510-1780)	6.80	6.50	6.23	3.65	2.50 ~ 2.50 + 2.50 2.90 ~ 8.20	7.50	2420 (520-2860)	11.11	10.63	10.19	3.10
	6.1	1.8 + 1.8 + 2.5	1.80 + 1.80 + 2.50 2.70 ~ 6.80	6.10	1780 (510-2150)	8.17	7.82	7.49	3.43	2.50 ~ 2.50 + 3.40 2.90 ~ 9.10	8.40	2420 (520-3060)	11.11	10.63	10.19	3.47
	7.1	1.8 + 1.8 + 3.5	1.80 + 1.80 + 3.50 2.70 ~ 7.90	7.10	2050 (510-2310)	9.41	9.00	8.63	3.46	2.50 ~ 2.50 + 4.30 2.90 ~ 10.00	9.30	2630 (520-3060)	12.08	11.55	11.07	3.54
	7.8	1.8 + 1.8 + 4.2	1.80 + 1.80 + 4.20 2.70 ~ 8.20	7.80	2250 (510-3460)	10.33	9.88	9.47	3.47	2.50 ~ 2.50 + 5.20 2.90 ~ 10.90	10.20	2670 (520-3060)	12.26	11.73	11.24	3.82
	8.6	1.8 + 1.8 + 5.0	1.80 + 1.80 + 5.00 2.70 ~ 9.50	8.60	2650 (510-3460)	12.17	11.64	11.15	3.25	2.50 ~ 2.50 + 6.50 2.90 ~ 12.20	11.50	3230 (520-3690)	14.83	14.19	13.59	3.56
	9.6	1.8 + 1.8 + 6.0	1.80 + 1.80 + 6.00 2.70 ~ 10.60	9.60	2650 (510-3460)	12.17	11.64	11.15	3.62	2.40 ~ 2.40 + 7.20 2.90 ~ 12.70	12.00	3230 (520-3690)	14.83	14.19	13.59	3.72
	6.8	1.8 + 2.5 + 2.5	1.80 + 2.50 + 2.50 2.70 ~ 7.60	6.80	1860 (510-2260)	8.54	8.17	7.83	3.66	2.50 ~ 3.40 + 3.40 2.90 ~ 10.00	9.30	2450 (520-2760)	11.25	10.76	10.31	3.80
	7.8	1.8 + 2.5 + 3.5	1.80 + 2.50 + 3.50 2.70 ~ 8.70	7.80	2250 (510-3270)	10.33	9.88	9.47	3.47	2.50 ~ 3.40 + 4.30 2.90 ~ 10.90	10.20	2530 (520-2880)	11.62	11.11	10.65	4.03
	8.5	1.8 + 2.5 + 4.2	1.80 + 2.50 + 4.20 2.70 ~ 9.00	8.50	2450 (510-3270)	11.25	10.76	10.31	3.47	2.50 ~ 3.40 + 5.20 2.90 ~ 11.80	11.10	2830 (520-3220)	12.99	12.43	11.91	3.92
	9.3	1.8 + 2.5 + 5.0	1.80 + 2.50 + 5.00 2.70 ~ 10.30	9.30	2750 (510-3270)	12.63	12.08	11.57	3.38	2.42 ~ 3.29 + 6.29 2.90 ~ 12.70	12.00	3290 (520-3690)	15.11	14.45	13.85	3.65
	10.3	1.8 + 2.5 + 6.0	1.75 + 2.43 + 5.83 2.70 ~ 10.80	10.00	2850 (510-3320)	13.09	12.52	11.99	3.51	2.24 ~ 3.04 + 6.72 2.90 ~ 12.70	12.00	3290 (520-3690)	15.11	14.45	13.85	3.65
	8.8	1.8 + 3.5 + 3.5	1.80 + 3.50 + 3.50 2.70 ~ 9.80	8.80	2600 (510-3460)	11.94	11.42	10.94	3.38	2.50 ~ 4.30 + 4.30 2.90 ~ 11.80	11.10	3050 (520-3330)	14.00	13.39	12.84	3.64
	9.5	1.8 + 3.5 + 4.2	1.80 + 3.50 + 4.20 2.70 ~ 10.10	9.50	2800 (510-3460)	12.86	12.30	11.78	3.39	2.50 ~ 4.30 + 5.20 2.90 ~ 12.70	12.00	3050 (520-3330)	14.00	13.39	12.84	3.93
	10.3	1.8 + 3.5 + 5.0	1.75 + 3.40 + 4.85 2.70 ~ 10.80	10.00	3080 (510-3580)	14.14	13.53	12.96	3.25	2.26 ~ 3.88 + 5.86 2.90 ~ 12.70	12.00	3290 (520-3690)	15.11	14.45	13.85	3.65
	11.3	1.8 + 3.5 + 6.0	1.59 + 3.10 + 5.31 2.70 ~ 10.50	10.00	4000 (510-3580)	18.37	17.57	16.84	2.50	2.10 ~ 3.61 + 6.29 2.90 ~ 12.70	12.00	3290 (520-3690)	15.11	14.45	13.85	3.65

10.2	1.8 + 4.2 + 4.2	1.76 + 4.12 + 4.12 2.70 ~ 10.50	10.00	3000 (510-3580)	13.77 - 13.18 - 12.63	3.33	2.33 ~ 4.84 + 4.84 2.90 ~ 12.70	12.00	3290 (520-3690)	15.11 - 14.45 - 13.85	3.65
11.0	1.8 + 4.2 + 5.0	1.64 + 3.82 + 4.55 2.70 ~ 10.64	10.00	3290 (510-3580)	15.11 - 14.45 - 13.85	3.04	2.11 ~ 4.39 + 5.49 2.90 ~ 12.70	12.00	3290 (520-3690)	15.11 - 14.45 - 13.85	3.65
12.0	1.8 + 4.2 + 6.0	1.50 + 3.50 + 5.00 2.70 ~ 11.00	10.00	3400 (510-4000)	15.61 - 14.93 - 14.31	2.94	1.97 ~ 4.11 + 5.92 2.90 ~ 12.70	12.00	3290 (520-3690)	15.11 - 14.45 - 13.85	3.65
11.8	1.8 + 5.0 + 5.0	1.53 + 4.24 + 4.24 2.70 ~ 10.80	10.00	3580 (510-4000)	16.44 - 15.72 - 15.07	2.79	1.94 ~ 5.03 + 5.03 2.90 ~ 12.70	12.00	3490 (520-3890)	16.02 - 15.33 - 14.69	3.44
12.8	1.8 + 5.0 + 6.0	1.41 + 3.91 + 4.69 2.70 ~ 12.00	10.00	3680 (510-4000)	16.90 - 16.16 - 15.49	2.72	1.82 ~ 4.73 + 5.45 2.90 ~ 12.70	12.00	3490 (520-3890)	16.02 - 15.33 - 14.69	3.44
13.8	1.8 + 6.0 + 6.0	1.30 + 4.35 + 4.35 2.70 ~ 12.50	10.00	3780 (510-4000)	17.36 - 16.60 - 15.91	2.65	1.71 ~ 5.14 + 5.14 2.90 ~ 12.70	12.00	3490 (520-3890)	16.02 - 15.33 - 14.69	3.44
7.5	2.5 + 2.5 + 2.5	2.50 + 2.50 + 2.50 2.70 ~ 8.40	7.50	2120 (510-2580)	9.73 - 9.31 - 8.92	3.54	3.40 ~ 3.40 + 3.40 2.90 ~ 10.90	10.20	2540 (520-2920)	11.66 - 11.16 - 10.69	4.02
8.5	2.5 + 2.5 + 3.5	2.50 + 2.50 + 3.50 2.70 ~ 9.50	8.50	2560 (510-3110)	11.75 - 11.24 - 10.77	3.32	3.40 ~ 3.40 + 4.30 2.90 ~ 11.80	11.10	2730 (520-3070)	12.53 - 11.99 - 11.49	4.07
9.2	2.5 + 2.5 + 4.2	2.50 + 2.50 + 4.20 2.70 ~ 9.80	9.20	2650 (510-3360)	12.17 - 11.64 - 11.15	3.47	3.40 ~ 3.40 + 5.20 2.90 ~ 12.70	12.00	2930 (520-3330)	13.45 - 12.87 - 12.33	4.10
10.0	2.5 + 2.5 + 5.0	2.50 + 2.50 + 5.00 2.70 ~ 11.10	10.00	3000 (510-3360)	13.77 - 13.18 - 12.63	3.33	3.07 ~ 3.07 + 5.86 2.90 ~ 12.70	12.00	3190 (520-3560)	14.65 - 14.01 - 13.43	3.76
11.0	2.5 + 2.5 + 6.0	2.27 + 2.27 + 5.45 2.70 ~ 11.09	10.00	3000 (510-3360)	13.77 - 13.18 - 12.63	3.33	2.85 ~ 2.85 + 6.29 2.90 ~ 12.70	12.00	3190 (520-3560)	14.65 - 14.01 - 13.43	3.76
9.5	2.5 + 3.5 + 3.5	2.50 + 3.50 + 3.50 2.70 ~ 10.60	9.50	2800 (510-3330)	12.86 - 12.30 - 11.78	3.39	3.40 ~ 4.30 + 4.30 2.90 ~ 12.70	12.00	2890 (520-3220)	13.27 - 12.69 - 12.16	4.15
10.2	2.5 + 3.5 + 4.2	2.45 + 3.43 + 4.12 2.70 ~ 10.69	10.00	3000 (510-3660)	13.77 - 13.18 - 12.63	3.33	3.16 ~ 4.00 + 4.84 2.90 ~ 12.70	12.00	2990 (520-3330)	13.73 - 13.13 - 12.58	4.01
11.0	2.5 + 3.5 + 5.0	2.27 + 3.18 + 4.55 2.70 ~ 11.09	10.00	3280 (510-3660)	15.06 - 14.40 - 13.80	3.05	2.87 ~ 3.63 + 5.49 2.90 ~ 12.70	12.00	3190 (520-3690)	14.65 - 14.01 - 13.43	3.76
12.0	2.5 + 3.5 + 6.0	2.08 + 2.92 + 5.00 2.70 ~ 11.50	10.00	3380 (510-3660)	15.52 - 14.84 - 14.23	2.96	2.68 ~ 3.39 + 5.92 2.90 ~ 12.70	12.00	3190 (520-3690)	14.65 - 14.01 - 13.43	3.76
10.9	2.5 + 4.2 + 4.2	2.29 + 3.85 + 3.85 2.70 ~ 10.28	10.00	3200 (510-3660)	14.69 - 14.05 - 13.47	3.13	2.96 ~ 4.52 + 4.52 2.90 ~ 12.70	12.00	3290 (520-3690)	15.11 - 14.45 - 13.85	3.65
11.7	2.5 + 4.2 + 5.0	2.14 + 3.59 + 4.27 2.70 ~ 10.68	10.00	3500 (510-4000)	16.07 - 15.37 - 14.73	2.86	2.70 ~ 4.13 + 5.17 2.90 ~ 12.70	12.00	3290 (520-3690)	15.11 - 14.45 - 13.85	3.65
12.7	2.5 + 4.2 + 6.0	1.97 + 3.31 + 4.72 2.70 ~ 12.00	10.00	3500 (510-4000)	16.07 - 15.37 - 14.73	2.86	2.53 ~ 3.88 + 5.59 2.90 ~ 12.70	12.00	3490 (520-3890)	16.02 - 15.33 - 14.69	3.44
12.5	2.5 + 5.0 + 5.0	2.00 + 4.00 + 4.00 2.70 ~ 11.60	10.00	3500 (510-4000)	16.07 - 15.37 - 14.73	2.86	2.49 ~ 4.76 + 4.76 2.90 ~ 12.70	12.00	3490 (520-3890)	16.02 - 15.33 - 14.69	3.44
13.5	2.5 + 5.0 + 6.0	1.85 + 3.70 + 4.44 2.70 ~ 12.50	10.00	3500 (510-4000)	16.07 - 15.37 - 14.73	2.86	2.34 ~ 4.48 + 5.17 2.90 ~ 12.70	12.00	3490 (520-3890)	16.02 - 15.33 - 14.69	3.44
14.5	2.5 + 6.0 + 6.0	1.72 + 4.14 + 4.14 2.70 ~ 12.50	10.00	3500 (510-4000)	16.07 - 15.37 - 14.73	2.86	2.22 ~ 4.89 + 4.89 2.90 ~ 12.70	12.00	3490 (520-3890)	16.02 - 15.33 - 14.69	3.44
10.5	3.5 + 3.5 + 3.5	3.33 + 3.33 + 3.33 2.70 ~ 11.14	10.00	3100 (510-4000)	14.23 - 13.61 - 13.05	3.23	4.00 ~ 4.00 + 4.00 2.90 ~ 12.70	12.00	3290 (520-3690)	15.11 - 14.45 - 13.85	3.65
11.2	3.5 + 3.5 + 4.2	3.13 + 3.13 + 3.75 2.70 ~ 10.71	10.00	3300 (510-4000)	15.15 - 14.49 - 13.89	3.03	3.74 ~ 3.74 + 4.52 2.90 ~ 12.70	12.00	3290 (520-3690)	15.11 - 14.45 - 13.85	3.65
12.0	3.5 + 3.5 + 5.0	2.92 + 2.92 + 4.17 2.70 ~ 12.00	10.00	3600 (510-4200)	16.53 - 15.81 - 15.15	2.78	3.42 ~ 3.42 + 5.17 2.90 ~ 12.70	12.00	3290 (520-3690)	15.11 - 14.45 - 13.85	3.65
13.0	3.5 + 3.5 + 6.0	2.69 + 2.69 + 4.62 2.70 ~ 12.50	10.00	3700 (510-4200)	16.99 - 16.25 - 15.57	2.70	3.20 ~ 3.20 + 5.59 2.90 ~ 12.70	12.00	3290 (520-3690)	15.11 - 14.45 - 13.85	3.65
11.9	3.5 + 4.2 + 4.2	2.94 + 3.53 + 3.53 2.70 ~ 10.34	10.00	3550 (510-4200)	16.30 - 15.59 - 14.94	2.82	3.51 ~ 4.24 + 4.24 2.90 ~ 12.70	12.00	3290 (520-3690)	15.11 - 14.45 - 13.85	3.65
12.7	3.5 + 4.2 + 5.0	2.76 + 3.31 + 3.94 2.70 ~ 12.50	10.00	3800 (510-4200)	17.45 - 16.69 - 15.99	2.63	3.23 ~ 3.90 + 4.88 2.90 ~ 12.70	12.00	3490 (520-3890)	16.02 - 15.33 - 14.69	3.44
13.7	3.5 + 4.2 + 6.0	2.55 + 3.07 + 4.38 2.70 ~ 12.50	10.00	3900 (510-4200)	17.91 - 17.13 - 16.41	2.56	3.04 ~ 3.67 + 5.29 2.90 ~ 12.70	12.00	3490 (520-3890)	16.02 - 15.33 - 14.69	3.44
13.5	3.5 + 5.0 + 5.0	2.59 + 3.70 + 3.70 2.70 ~ 12.50	10.00	4100 (510-4500)	18.82 - 18.01 - 17.26	2.44	2.98 ~ 4.51 + 4.51 2.90 ~ 12.70	12.00	3490 (520-3890)	16.02 - 15.33 - 14.69	3.44
14.5	3.5 + 5.0 + 6.0	2.41 + 3.45 + 4.14 2.70 ~ 12.50	10.00	4100 (510-4500)	18.82 - 18.01 - 17.26	2.44	2.82 ~ 4.26 + 4.92 2.90 ~ 12.70	12.00	3690 (520-4000)	16.94 - 16.21 - 15.53	3.25
15.5	3.5 + 6.0 + 6.0	2.26 + 3.87 + 3.87 2.70 ~ 12.50	10.00	4100 (510-4500)	18.82 - 18.01 - 17.26	2.44	2.67 ~ 4.66 + 4.66 2.90 ~ 12.70	12.00	3690 (520-4000)	16.94 - 16.21 - 15.53	3.25
12.6	4.2 + 4.2 + 4.2	3.33 + 3.33 + 3.33 2.70 ~ 11.00	10.00	3750 (510-4500)	17.22 - 16.47 - 15.78	2.67	4.00 ~ 4.00 + 4.00 2.90 ~ 12.70	12.00	3690 (520-4000)	16.94 - 16.21 - 15.53	3.25
13.4	4.2 + 4.2 + 5.0	3.13 + 3.13 + 3.73 2.70 ~ 12.50	10.00	4000 (510-4500)	18.37 - 17.57 - 16.84	2.50	3.69 ~ 3.69 + 4.62 2.90 ~ 12.70	12.00	3890 (520-4200)	17.86 - 17.08 - 16.37	3.08
14.4	4.2 + 4.2 + 6.0	2.92 + 2.92 + 4.17 2.70 ~ 12.50	10.00	4100 (510-4500)	18.82 - 18.01 - 17.26	2.44	3.49 ~ 3.49 + 5.03 2.90 ~ 12.70	12.00	3890 (520-4200)	17.86 - 17.08 - 16.37	3.08
14.2	4.2 + 5.0 + 5.0	2.96 + 3.52 + 3.52 2.70 ~ 12.50	10.00	4100 (510-4500)	18.82 - 18.01 - 17.26	2.44	3.43 ~ 4.29 + 4.29 2.90 ~ 12.70	12.00	3890 (520-4200)	17.86 - 17.08 - 16.37	3.08
15.2	4.2 + 5.0 + 6.0	2.76 + 3.29 + 3.95 2.70 ~ 12.50	10.00	4100 (510-4500)	18.82 - 18.01 - 17.26	2.44	3.25 ~ 4.06 + 4.69 2.90 ~ 12.70	12.00	4190 (520-4500)	19.24 - 18.40 - 17.63	2.86
15.0	5.0 + 5.0 + 5.0	3.33 + 3.33 + 3.33 2.70 ~ 12.50	10.00	4100 (510-4500)	18.82 - 18.01 - 17.26	2.44	4.00 ~ 4.00 + 4.00 2.90 ~ 12.70	12.00	4190 (520-4500)	19.24 - 18.40 - 17.63	2.86
16.0	5.0 + 5.0 + 6.0	3.13 + 3.13 + 3.75 2.70 ~ 12.50	10.00	4100 (510-4500)	18.82 - 18.01 - 17.26	2.44	3.80 ~ 3.80 + 4.39 2.90 ~ 12.70	12.00	4190 (520-4500)	19.24 - 18.40 - 17.63	2.86
6.0	1.5 + 1.5 + 1.5 + 1.5	1.50 + 1.50 + 1.50 + 1.50 2.90 ~ 6.40	6.00	1680 (550-2000)	7.71 - 7.38 - 7.07	3.57	2.00 ~ 2.00 + 2.00 + 2.00 3.00 ~ 8.70	8.00	2000 (540-2652)	9.18 - 8.78 - 8.42	4.00
6.3	1.5 + 1.5 + 1.5 + 1.8	1.50 + 1.50 + 1.50 + 1.80 2.90 ~ 6.80	6.30	1780 (550-2000)	8.17 - 7.82 - 7.49	3.54	2.00 ~ 2.00 + 2.00 + 2.50 3.00 ~ 9.20	8.50	2200 (540-2760)	10.10 - 9.66 - 9.26	3.86
7.0	1.5 + 1.5 + 1.5 + 2.5	1.50 + 1.50 + 1.50 + 2.50 2.90 ~ 7.60	7.00	1780 (550-2136)	8.17 - 7.82 - 7.49	3.93	2.00 ~ 2.00 + 2.00 + 3.40 3.00 ~ 10.10	9.40	2390 (540-3036)	10.97 - 10.50 - 10.06	3.93
8.0	1.5 + 1.5 + 1.5 + 3.5	1.50 + 1.50 + 1.50 + 3.50 2.90 ~ 8.70	8.00	2500 (550-4000)	11.48 - 10.98 - 10.52	3.20	2.00 ~ 2.00 + 2.00 + 4.30 3.00 ~ 11.00	10.30	2750 (540-3468)	12.63 - 12.08 - 11.57	3.75
8.7	1.5 + 1.5 + 1.5 + 4.2	1.50 + 1.50 + 1.50 + 4.20 2.90 ~ 9.00	8.70	2600 (550-4000)	11.94 - 11.42 - 10.94	3.35	2.00 ~ 2.00 + 2.00 + 5.20 3.00 ~ 11.90	11.20	2850 (540-3360)	13.09 - 12.52 - 11.99	3.93
9.5	1.5 + 1.5 + 1.5 + 5.0	1.50 + 1.50 + 1.50 + 5.00 2.90 ~ 10.30	9.50	2650 (550-4000)	12.17 - 11.64 - 11.15	3.58	1.92 ~ 1.92 + 1.92 + 6.24 3.00 ~ 12.70	12.00	3190 (540-4000)	14.65 - 14.01 - 13.43	3.76
10.5	1.5 + 1.5 + 1.5 + 6.0	1.43 + 1.43 + 1.43 + 5.71 2.90 ~ 10.86	10.00	2650 (550-4000)	12.17 - 11.64 - 11.15	3.77	1.78 ~ 1.78 + 1.78 + 6.67 3.00 ~ 12.70	12.00	3190 (540-4000)	14.65 - 14.01 - 13.43	3.76
6.6	1.5 + 1.5 + 1.8 + 1.8	1.50 + 1.50 + 1.80 + 1.80 2.90 ~ 7.20	6.60	1850 (550-2100)	8.49 - 8.12 - 7.79	3.57	2.00 ~ 2.00 + 2.50 + 2.50 3.00 ~ 9.70	9.00	2380 (540-4000)	10.93 - 10.45 - 10.02	3.78
7.3	1.5 + 1.5 + 1.8 + 2.5	1.50 + 1.50 + 1.80 + 2.50 2.90 ~ 8.00	7.30	2050 (550-2220)	9.41 - 9.00 - 8.63	3.56	2.00 ~ 2.00 + 2.50 + 3.40 3.00 ~ 10.60	9.90	2530 (540-4000)	11.62 - 11.11 - 10.65	3.91
8.3	1.5 + 1.5 + 1.8 + 3.5	1.50 + 1.50 + 1.80 + 3.50 2.90 ~ 9.10	8.30	2350 (550-3120)	10.79 - 10.32 - 9.89	3.53	2.00 ~ 2.00 + 2.50 + 4.30 3.00 ~ 11.50	10.80	2680 (540-4000)	12.30 - 11.77 - 11.28	4.03
9.0	1.5 + 1.5 + 1.8 + 4.2	1.50 + 1.50 + 1.80 + 4.20 2.90 ~ 9.40	9.00	2350 (550-3120)	10.79 - 10.32 - 9.89	3.83	2.00 ~ 2.00 + 2.50 + 5.20 3.00 ~ 12.40	11.70	2780 (540-4000)	12.76 - 12.21 - 11.70	4.21
9.8	1.5 + 1.5 + 1.8 + 5.0	1.50 + 1.50 + 1.80 + 5.00 2.90 ~ 10.70	9.80	2800 (550-3510)	12.86 - 12.30 - 11.78	3.50	1.85 ~ 1.85 + 2.31 + 6.00 3.00 ~ 12.70	12.00	3290 (540-4000)	15.11 - 14.45 - 13.85	3.65
10.8	1.5 + 1.5 + 1.8 + 6.0	1.39 + 1.39 + 1.67 + 5.56 2.90 ~ 10.93	10.00	2800 (550-3510)	12.86 - 12.30 - 11.78	3.57	1.71 ~ 1.71 + 2.14 + 6.43 3.00 ~ 12.70	12.00	3290 (540-4000)	15.11 - 14.45 - 13.85	3.65
8.0	1.5 + 1.5 + 2.5 + 2.5	1.50 + 1.50 + 2.50 + 2.50 2.90 ~ 8.80	8.00	2150 (550-2580)	9.87 - 9.44 - 9.05	3.72	2.00 ~ 2.00 + 3.40 + 3.40 3.00 ~ 11.50	10.80	2480 (540-4000)	11.39 - 10.89 - 10.44	4.35
9.0	1.5 + 1.5 + 2.5 + 3.5	1.50 + 1.50 + 2.50 + 3.50 2.90 ~ 9.90	9.00	2600 (550-3120)	11.94 - 11.42 - 10.94	3.46	2.00 ~ 2.00 + 3.40 + 4.30 3.00 ~ 12.40	11.70	2890 (540-4000)	13.27 - 12.69 - 12.16	4.05
9.7	1.5 + 1.5 + 2.5 + 4.2	1.50 + 1.50 + 2.50 + 4.20 2.90 ~ 10.20	9.70	2800 (550-3510)	12.86 - 12.30 - 11.78	3.46	1.90 ~ 1.90 + 3.24 + 4.95 3.00 ~ 12.70	12.00	2890 (540-4000)	13.27 - 12.69 - 12.16	4.15
10.5	1.5 + 1.5 + 2.5 + 5.0	1.43 + 1.43 + 2.38 + 4.76 2.90 ~ 10.56	10.00	3000 (550-3510)	13.77 - 13.18 - 12.63	3.33	1.73 ~ 1.73 + 2.94 + 5.61 3.00 ~ 12.70	12.00	3290 (540-4000)	15.11 - 14.45 - 13.85	3.65
11.5	1.5 + 1.5 + 2.5 + 6.0	1.30 + 1.30 + 2.17 + 5.22 2.90 ~ 12.50	10.00	3000 (550-3510)	13.77 - 13.18 - 12.63	3.33	1.61 ~ 1.61 + 2.74 + 6.04 3.00 ~ 12.70	12.00	3290 (540-4000)	15.11 - 14.45 - 13.85	3.65
10.0	1.5 + 1.5 + 3.5 + 3.5	1.50 + 1.50 + 3.50 + 3.50 2.90 ~ 10.56	10.00	3000 (550-3510)	13.77 - 13.18 - 12.63	3.33	1.90 ~ 1.90 + 4.10 + 4.10 3.00 ~ 12.70	12.00	2990 (540-4000)	13.73 - 13.13 - 12.58	4.01
10.7	1.5 + 1.5 + 3.5 + 4.2	1.40 + 1.40 + 3.27 + 3.93 2.90 ~ 10.56	10.00	3150 (550-3510)	14.46 - 13.83 - 13.26	3.17	1.78 ~ 1.78 + 3.82 + 4.62 3.00 ~ 12.70	12.00	3190 (540-4000)	14.65 - 14.01 - 13.43	3.76
11.5	1.5 + 1.5 + 3.5 + 5.0	1.30 + 1.30 + 3.04 + 4.35 2.90 ~ 12.50	10.00	3300 (550-3710)	15.15 - 14.49 - 13.89	3.03	1.62 ~ 1.62 + 3.49 + 5.27 3.00 ~ 12.70	12.00	3390 (540-4000)	15.56 - 14.89 - 14.27	3.54
12.5	1.5 + 1.5 + 3.5 + 6.0	1.20 + 1.20 + 2.80 + 4.80 2.90 ~ 10.96	10.00	3300 (550-3710)	15.15 - 14.49 - 13.89	3.03	1.52 ~ 1.52 + 3.27 + 5.70 3.00 ~ 12.70	12.00	3390 (540-4000)	15.56 - 14.89 - 14.27	3.54
11.4	1.5 + 1.5 + 4.2 + 4.2	1.32 + 1.32 + 3.68 + 3.68 2.90 ~ 10.96	10.00	3300 (550-4000)	15.15 - 14.49 - 13.89	3.03	1.67 ~ 1.67 + 4.33 + 4.33 3.00 ~ 12.70	12.00	3290 (540-4000)	15.11 - 14.45 - 13.85	3.65
12.2	1.5 + 1.5 + 4.2 + 5.0	1.23 + 1.23 + 3.44 + 4.10 2.90 ~ 11.56	10.00	3400 (550-4000)	15.61 - 14.93 - 14.31	2.94	1.53 ~ 1.53 + 3.97 + 4.97 3.00 ~ 12.70	12.00	3490 (540-4500)	16.02 - 15.33 - 14.69	3.44
13.2	1.5 + 1.5 + 4.2 + 6.0	1.14 + 1.14 + 3.18 + 4.55 2.90 ~ 11.56	10.00	3400 (550-4000)	15.61 - 14.93 - 14.31	2.94	1.44 ~ 1.44 + 3.74 + 5.39 3.00 ~ 12.70	12.00	3490 (540-4500)	16.02 - 15.33 - 14.69	3.44
13.0	1.5 + 1.5 + 5.0 + 5.0	1.15 + 1.15 + 3.85 + 3.85 2.90 ~ 12.00	10.00	3500 (550-4000)	16.07 - 15.37 - 14.73	2.86	1.41 ~ 1.41 + 4.59 + 4.59 3.00 ~ 12.70	12.00	3490 (540-4500)	16.02 - 15.33 - 14.69	3.44
14.0	1.5 + 1.5 + 5.0 + 6.0	1.07 + 1.07 + 3.57 + 4.29 2.90 ~ 12.50	10.00	3610 (550-4000)	16.57 - 15.85 - 15.19	2.77	1.33 ~ 1.33 + 4.33 + 5.00 3.00 ~ 12.70	12.00	3490 (540-4500)	16.02 - 15.33 - 14.69	3.44
6.9	1.5 + 1.8 + 1.8 + 1.8	1.50 + 1.80 + 1.80 + 1.80 2.90 ~ 7.60	6.90	2140 (550-2568)	9.83 - 9.40 - 9.01	3.22	2.00 ~ 2.50 + 2.50 + 2.50 3.00 ~ 10.20	9.50	2750 (540-4000)	12.63 - 12.08 - 11.57	3.45
7.6	1.5 + 1.8 + 1.8 + 2.5	1.50 + 1.80 + 1.80 + 2.50 2.90 ~ 8.40	7.60	2140 (550-2568)	9.83 - 9.40 - 9.01	3.55	2.00 ~ 2.50 + 2.50 + 3.40 3.00 ~ 11.10	10.40	2750 (540-4000)	12.63 - 12.08 - 11.57	3.78
8.6	1.5 + 1.8 + 1.8 + 3.5	1.50 + 1.80 + 1.80 + 3.50 2.90 ~ 9.50	8.60	2240 (550-3060)	10.28 - 9.84 - 9.43	3.84	2.00 ~ 2.50 + 2.50 + 4.30 3.00 ~ 12.00	11.30	2750 (540-4000)	12.63 - 12.08 - 11.57	4.11
9.3	1.5 + 1.8 + 1.8 + 4.2	1.50 + 1.80 + 1.80 + 4.20 2.90 ~ 9.80	9.30	2550 (550-3120)	11.71 - 11.20 - 10.73	3.65	1.97 ~ 2.46 + 2.46 + 5.11 3.00 ~ 12.70	12.00	2890 (540-4000)	13.27 - 12.69 - 12.16	4.15
10.1	1.5 + 1.8 + 1.8 + 5.0	1.49 + 1.78 + 1.78 + 4.95 2.90 ~ 10.99	10.00	2800 (550-3120)	12.86 - 12.30 - 11.78	3.57	1.78 ~ 2.22 + 2.22 + 5.78 3.00 ~ 12.70	12.00	3390 (540-4500)	15.56 - 14.89 - 14.27	3.54
11.1	1.5 + 1.8 + 1.8 + 6.0	1.35 + 1.62 + 1.62 + 5.41 2.90 ~ 10.99	10.00	2800 (550-3120)	12.86 - 12.30 - 11.78	3.57	1.66 ~ 2.07 + 2.07 + 6.21 3.00 ~ 12.70	12.00	3390 (540-4500)	15.56 - 14.89 - 14.27	3.54
8.3	1.5 + 1.8 + 2.5 + 2.5	1.50 + 1.80 + 2.50 + 2.50 2.90 ~ 9.20	8.30	2240 (550-3120)	10.28 - 9.84 - 9.43	3.71	2.00 ~ 2.50 + 3.40 + 3.40 3.00 ~ 12.00	11.30	2890 (540-4000)	13.27 - 12.69 - 12.16	3.91
9.3	1.5 + 1.8 + 2.5 + 3.5	1.50 + 1.80 + 2.50 + 3.50 2.90 ~ 10.30	9.30	2550 (550-3120)	11.71 - 11.20 - 10.73	3.65	1.97 ~ 2.46 + 3.34 + 4.23 3.00 ~ 12.70	12.00	2990 (540-4000)	13.73 - 13.13 - 12.58	4.01
10.0	1.5 + 1.8 + 2.5 + 4.2	1.50 + 1.80 + 2.50 + 4.20 2.90 ~ 10.60	10.00	2800 (550-3120)	12.86 - 12.30 - 11.78	3.57	1.83 ~ 2.29 + 3.11 + 4.76 3.00 ~ 12.70	12.00	3190 (540-4000)	14.65 - 14.01 - 13.43	3.76
10.8	1.5 + 1.8 + 2.5 + 5.0	1.39 + 1.67 + 2.31 + 4.63 2.90 ~ 10.56	10.00	2800 (550-3120)	12.86 - 12.30 - 11.78	3.57	1.67 ~ 2.08 + 2.83 + 5.42 3.00 ~ 12.70	12.00	3490 (540-4000)	16.02 - 15.33 - 14.69	3.44
11.8	1.5 + 1.8 + 2.5 + 6.0	1.27 + 1.53 + 2.12 + 5.08 2.90 ~ 10.80	10.00	3150 (550-3700)	14.46 - 13.83 - 13.26	3.17	1.56 ~ 1.95 + 2.65 + 5.84 3.00 ~ 12.70	12.00	3490 (540-4500)	16.02 - 15.33 - 14.69	3.44
10.3	1.5 + 1.8 + 3.5 + 3.5	1.46 + 1.75 + 3.40 + 3.40 2.90 ~ 10.60	10.00	3150 (550-3700)	14.46 - 13.83 - 13.26	3.17	1.83 ~ 2.29 + 3.94 + 3.94 3.00 ~ 12.70	12.00	3190 (540-4000)	14.65 - 14.01 - 13.43	3.76
11.0	1.5 + 1.8 + 3.5 + 4.2	1.36 + 1.64 + 3.18 + 3.82 2.90 ~ 10.64	10.00	3150 (550-3700)	14.46 - 13.83 - 13.26	3.17	1.71 ~ 2.14 + 3.69 + 4.46 3.00 ~ 12.70	12.00	3290 (540-4000)	15.11 - 14.45 - 13.85	3.65
11.8	1.5 + 1.8 + 3.5 + 5.0	1.27 + 1.53 + 2.97 + 4.24 2.90 ~ 10.90	10.00	3400 (550-4000)	15.61 - 14.93 - 14.31	2.94	1.57 ~ 1.96 + 3.37 + 5.10 3.00 ~ 12.70	12.00	3560 (540-4500)	16.35 - 15.63 - 14.98	3.37
12.8	1.5 + 1.8 + 3.5 + 6.0	1.17 + 1.41 + 2.73 + 4.69 2.90 ~ 11.00	10.00	3400 (550-4000)	15.61 - 14.93 - 14.31	2.94	1.47 ~ 1.84 + 3.17 + 5.52 3.00 ~ 12.70	12.00	3560 (540-4500)	16.35 - 15.63 - 14.98	3.37
11.7	1.5 + 1.8 + 4.2 + 4.2	1.28 + 1.54 + 3.59 + 3.59 2.90 ~ 10.90	10.00	3400 (550-4000)	15.61 - 14.93 - 14.31	2.94	1.61 ~ 2.01 + 4.19 + 4.19 3.00 ~ 12.70	12.00	3490 (540-4500)	16.02 - 15.33 - 14.69	3.44
12.5	1.5 + 1.8 + 4.2 + 5.0	1.20 + 1.44 + 3.36 + 4.00 2.90 ~ 11.30	10.00	3500 (550-4000)	16.07 - 15.37 - 14.73	2.86	1.48 ~ 1.85 + 3.85 + 4.81 3.00 ~ 12.70	12.00	3590 (540-4500)	16.48 - 15.77 - 15.11	3.34
13.5	1.5 + 1.8 + 4.2 + 6.0	1.11 + 1.33 + 3.11 + 4.44 2.90 ~ 11.50	10.00	3500 (550-4000)	16.07 - 15.37 - 14.73	2.86	1.40 ~ 1.74 + 3.63 + 5.23 3.00 ~ 12.70	12.00	3590 (540-4500)	16.48 - 15.77 - 15.11	3.34
13.3	1.5 + 1.8 + 5.0 + 5.0	1.13 + 1.35 + 3.76 + 3.76 2.90 ~ 11.30	10.00	3650 (550-4000)	16.76 - 16.03 - 15.36	2.74	1.37 ~ 1.71 + 4.46 + 4.46 3.00 ~ 12.70	12.00	3590 (540-4500)	16.48 - 15.77 - 15.11	3.34
14.3	1.5 + 1.8 + 5.0 + 6.0	1.05 + 1.28 + 3.50 + 4.20 2.90 ~ 12.50	10.00	4000 (550-4500)	18.37 - 17.57 - 16.84	2.50	1.30

FOUR UNITS	12.5	1.5 + 2.5 + 2.5 + 6.0	1.20 + 2.00 + 2.00 + 4.80 2.90 ~ 10.90	10.00	3160 (550-3500)	14.51 - 13.88 - 13.30	3.16	1.47 ~ 2.50 + 2.50 + 5.52 3.00 ~ 12.70	12.00	3590 (540-4500)	16.48 - 15.77 - 15.11	3.34
	11.0	1.5 + 2.5 + 3.5 + 3.5	1.36 + 2.27 + 3.18 + 3.18 2.90 ~ 10.50	10.00	3000 (550-3500)	13.77 - 13.18 - 12.63	3.33	1.71 ~ 2.91 + 3.69 + 3.69 3.00 ~ 12.70	12.00	3090 (540-4000)	14.19 - 13.57 - 13.01	3.88
	11.7	1.5 + 2.5 + 3.5 + 4.2	1.28 + 2.14 + 2.99 + 3.59 2.90 ~ 10.68	10.00	3210 (550-3700)	14.74 - 14.10 - 13.51	3.12	1.61 ~ 2.74 + 3.46 + 4.19 3.00 ~ 12.70	12.00	3190 (540-4000)	14.65 - 14.01 - 13.43	3.76
	12.5	1.5 + 2.5 + 3.5 + 5.0	1.20 + 2.00 + 2.80 + 4.00 2.90 ~ 10.80	10.00	3400 (550-3700)	15.61 - 14.93 - 14.31	2.94	1.48 ~ 2.52 + 3.19 + 4.81 3.00 ~ 12.70	12.00	3650 (540-4500)	16.76 - 16.03 - 15.36	3.29
	13.5	1.5 + 2.5 + 3.5 + 6.0	1.11 + 1.85 + 2.59 + 4.44 2.90 ~ 10.90	10.00	3400 (550-3700)	15.61 - 14.93 - 14.31	2.94	1.40 ~ 2.37 + 3.00 + 5.23 3.00 ~ 12.70	12.00	3650 (540-4500)	16.76 - 16.03 - 15.36	3.29
	12.4	1.5 + 2.5 + 4.2 + 4.2	1.21 + 2.02 + 3.39 + 3.39 2.90 ~ 10.63	10.00	3200 (550-3700)	14.69 - 14.05 - 13.47	3.13	1.52 ~ 2.58 + 3.95 + 3.95 3.00 ~ 12.70	12.00	3590 (540-4500)	16.48 - 15.77 - 15.11	3.34
	13.2	1.5 + 2.5 + 4.2 + 5.0	1.14 + 1.89 + 3.18 + 3.79 2.90 ~ 10.90	10.00	3610 (550-4500)	16.57 - 15.85 - 15.19	2.77	1.40 ~ 2.39 + 3.65 + 4.56 3.00 ~ 12.70	12.00	3650 (540-4500)	16.76 - 16.03 - 15.36	3.29
	14.2	1.5 + 2.5 + 4.2 + 6.0	1.06 + 1.76 + 2.96 + 4.23 2.90 ~ 11.20	10.00	3720 (550-4500)	17.08 - 16.34 - 15.66	2.69	1.33 ~ 2.25 + 3.45 + 4.97 3.00 ~ 12.70	12.00	3650 (540-4500)	16.76 - 16.03 - 15.36	3.29
	14.0	1.5 + 2.5 + 5.0 + 5.0	1.07 + 1.79 + 3.57 + 3.57 2.90 ~ 11.50	10.00	3800 (550-4500)	17.45 - 16.69 - 15.99	2.63	1.30 ~ 2.22 + 4.24 + 4.24 3.00 ~ 12.70	12.00	3650 (540-4500)	16.76 - 16.03 - 15.36	3.29
	15.0	1.5 + 2.5 + 5.0 + 6.0	1.00 + 1.67 + 3.33 + 4.00 2.90 ~ 12.50	10.00	4000 (550-4500)	18.37 - 17.57 - 16.84	2.50	1.24 ~ 2.10 + 4.02 + 4.64 3.00 ~ 12.70	12.00	3650 (540-4500)	16.76 - 16.03 - 15.36	3.29
	12.0	1.5 + 3.5 + 3.5 + 3.5	1.25 + 2.92 + 2.92 + 2.92 2.90 ~ 12.50	10.00	3350 (550-3700)	15.38 - 14.71 - 14.10	2.99	1.61 ~ 3.46 + 3.46 + 3.46 3.00 ~ 12.70	12.00	3190 (540-4000)	14.65 - 14.01 - 13.43	3.76
	12.7	1.5 + 3.5 + 3.5 + 4.2	1.18 + 2.76 + 2.76 + 3.31 2.90 ~ 12.50	10.00	3350 (550-3700)	15.38 - 14.71 - 14.10	2.99	1.52 ~ 3.27 + 3.27 + 3.95 3.00 ~ 12.70	12.00	3290 (540-4000)	15.11 - 14.45 - 13.85	3.65
	13.5	1.5 + 3.5 + 3.5 + 5.0	1.11 + 2.59 + 2.59 + 3.70 2.90 ~ 12.50	10.00	3800 (550-4500)	17.45 - 16.69 - 15.99	2.63	1.40 ~ 3.02 + 3.02 + 4.56 3.00 ~ 12.70	12.00	3690 (540-4500)	16.94 - 16.21 - 15.53	3.25
	14.5	1.5 + 3.5 + 3.5 + 6.0	1.03 + 2.41 + 2.41 + 4.14 2.90 ~ 12.50	10.00	4000 (550-4500)	18.37 - 17.57 - 16.84	2.50	1.33 ~ 2.85 + 2.85 + 4.97 3.00 ~ 12.70	12.00	3690 (540-4500)	16.94 - 16.21 - 15.53	3.25
	13.4	1.5 + 3.5 + 4.2 + 4.2	1.12 + 2.61 + 3.13 + 3.13 2.90 ~ 12.50	10.00	4000 (550-4500)	18.37 - 17.57 - 16.84	2.50	1.44 ~ 3.09 + 3.74 + 3.74 3.00 ~ 12.70	12.00	3490 (540-4500)	16.02 - 15.33 - 14.69	3.44
	14.2	1.5 + 3.5 + 4.2 + 5.0	1.06 + 2.46 + 2.96 + 3.52 2.90 ~ 12.50	10.00	4000 (550-4500)	18.37 - 17.57 - 16.84	2.50	1.33 ~ 2.87 + 3.47 + 4.33 3.00 ~ 12.70	12.00	3790 (540-4500)	17.40 - 16.64 - 15.95	3.17
	15.2	1.5 + 3.5 + 4.2 + 6.0	0.99 + 2.30 + 2.76 + 3.95 2.90 ~ 12.50	10.00	4000 (550-4500)	18.37 - 17.57 - 16.84	2.50	1.26 ~ 2.72 + 3.28 + 4.74 3.00 ~ 12.70	12.00	3790 (540-4500)	17.40 - 16.64 - 15.95	3.17
	15.0	1.5 + 3.5 + 5.0 + 5.0	1.00 + 2.33 + 3.33 + 3.33 2.90 ~ 12.50	10.00	4000 (550-4500)	18.37 - 17.57 - 16.84	2.50	1.24 ~ 2.67 + 4.04 + 4.04 3.00 ~ 12.70	12.00	3890 (540-4500)	17.86 - 17.08 - 16.37	3.08
	16.0	1.5 + 3.5 + 5.0 + 6.0	0.94 + 2.19 + 3.13 + 3.75 2.90 ~ 12.50	10.00	4000 (550-4500)	18.37 - 17.57 - 16.84	2.50	1.18 ~ 2.54 + 3.84 + 4.43 3.00 ~ 12.70	12.00	3890 (540-4500)	17.86 - 17.08 - 16.37	3.08
	14.1	1.5 + 4.2 + 4.2 + 4.2	1.06 + 2.98 + 2.98 + 2.98 2.90 ~ 12.50	10.00	3800 (550-4500)	17.45 - 16.69 - 15.99	2.63	1.36 ~ 3.55 + 3.55 + 3.55 3.00 ~ 12.70	12.00	3690 (540-4500)	16.94 - 16.21 - 15.53	3.25
	14.9	1.5 + 4.2 + 4.2 + 5.0	1.01 + 2.82 + 2.82 + 3.36 2.90 ~ 12.50	10.00	4000 (550-4500)	18.37 - 17.57 - 16.84	2.50	1.27 ~ 3.30 + 3.30 + 4.13 3.00 ~ 12.70	12.00	3890 (540-4500)	17.86 - 17.08 - 16.37	3.08
	15.9	1.5 + 4.2 + 4.2 + 6.0	0.94 + 2.64 + 2.64 + 3.77 2.90 ~ 12.50	10.00	4000 (550-4500)	18.37 - 17.57 - 16.84	2.50	1.21 ~ 3.14 + 3.14 + 4.52 3.00 ~ 12.70	12.00	3890 (540-4500)	17.86 - 17.08 - 16.37	3.08
	15.7	1.5 + 4.2 + 5.0 + 5.0	0.96 + 2.68 + 3.18 + 3.18 2.90 ~ 12.50	10.00	4000 (550-4500)	18.37 - 17.57 - 16.84	2.50	1.19 ~ 3.09 + 3.86 + 3.86 3.00 ~ 12.70	12.00	3990 (540-4000)	18.32 - 17.52 - 16.79	3.01
	7.2	1.8 + 1.8 + 1.8 + 1.8	1.80 + 1.80 + 1.80 + 1.80 2.90 ~ 8.00	7.20	2330 (550-3120)	10.70 - 10.23 - 9.81	3.09	2.50 ~ 2.50 + 2.50 + 2.50 3.00 ~ 10.70	10.00	2850 (540-4000)	13.09 - 12.52 - 11.99	3.51
	7.9	1.8 + 1.8 + 1.8 + 2.5	1.80 + 1.80 + 1.80 + 2.50 2.90 ~ 8.80	7.90	2380 (550-3120)	10.93 - 10.45 - 10.02	3.32	2.50 ~ 2.50 + 2.50 + 3.40 3.00 ~ 11.60	10.90	2950 (540-4000)	13.54 - 12.96 - 12.42	3.69
	8.9	1.8 + 1.8 + 1.8 + 3.5	1.80 + 1.80 + 1.80 + 3.50 2.90 ~ 9.90	8.90	2630 (550-3120)	12.08 - 11.55 - 11.07	3.38	2.50 ~ 2.50 + 2.50 + 4.30 3.00 ~ 12.50	11.80	2950 (540-4000)	13.54 - 12.96 - 12.42	4.00
	9.6	1.8 + 1.8 + 1.8 + 4.2	1.80 + 1.80 + 1.80 + 4.20 2.90 ~ 10.20	9.60	2640 (550-3460)	12.12 - 11.59 - 11.11	3.64	2.36 ~ 2.36 + 2.36 + 4.91 3.00 ~ 12.70	12.00	3050 (540-4000)	14.00 - 13.39 - 12.84	3.93
	10.4	1.8 + 1.8 + 1.8 + 5.0	1.73 + 1.73 + 1.73 + 4.81 2.90 ~ 11.06	10.00	2900 (550-3460)	13.31 - 12.74 - 12.21	3.45	2.14 ~ 2.14 + 2.14 + 5.57 3.00 ~ 12.70	12.00	3430 (540-4000)	15.75 - 15.06 - 14.44	3.50
	11.4	1.8 + 1.8 + 1.8 + 6.0	1.58 + 1.58 + 1.58 + 5.26 2.90 ~ 12.50	10.00	3000 (550-3460)	13.77 - 13.18 - 12.63	3.33	2.00 ~ 2.00 + 2.00 + 6.00 3.00 ~ 12.70	12.00	3430 (540-4000)	15.75 - 15.06 - 14.44	3.50
	8.6	1.8 + 1.8 + 2.5 + 2.5	1.80 + 1.80 + 2.50 + 2.50 2.90 ~ 9.60	8.60	2690 (550-3040)	12.35 - 11.81 - 11.32	3.20	2.50 ~ 2.50 + 3.40 + 3.40 3.00 ~ 12.50	11.80	2950 (540-4000)	13.54 - 12.96 - 12.42	4.00
	9.6	1.8 + 1.8 + 2.5 + 3.5	1.80 + 1.80 + 2.50 + 3.50 2.90 ~ 10.10	9.60	2690 (550-3460)	12.35 - 11.81 - 11.32	3.57	2.36 ~ 2.36 + 3.21 + 4.06 3.00 ~ 12.70	12.00	3050 (540-4000)	14.00 - 13.39 - 12.84	3.93
	10.3	1.8 + 1.8 + 2.5 + 4.2	1.75 + 1.75 + 2.43 + 4.08 2.90 ~ 10.68	10.00	2850 (550-3460)	13.09 - 12.52 - 11.99	3.51	2.21 ~ 2.21 + 3.00 + 4.59 3.00 ~ 12.70	12.00	3150 (540-4000)	14.46 - 13.83 - 13.26	3.81
	11.1	1.8 + 1.8 + 2.5 + 5.0	1.62 + 1.62 + 2.25 + 4.50 2.90 ~ 11.15	10.00	3000 (550-3460)	13.77 - 13.18 - 12.63	3.33	2.01 ~ 2.01 + 2.74 + 5.23 3.00 ~ 12.70	12.00	3490 (540-4000)	16.02 - 15.33 - 14.69	3.44
	12.1	1.8 + 1.8 + 2.5 + 6.0	1.49 + 1.49 + 2.07 + 4.96 2.90 ~ 11.60	10.00	3000 (550-3460)	13.77 - 13.18 - 12.63	3.33	1.89 ~ 1.89 + 2.57 + 5.66 3.00 ~ 12.70	12.00	3490 (540-4000)	16.02 - 15.33 - 14.69	3.44
	10.6	1.8 + 1.8 + 3.5 + 3.5	1.70 + 1.70 + 3.30 + 3.30 2.90 ~ 10.60	10.00	2900 (550-3460)	13.31 - 12.74 - 12.21	3.45	2.21 ~ 2.21 + 3.79 + 3.79 3.00 ~ 12.70	12.00	3130 (540-4000)	14.37 - 13.75 - 13.17	3.83
	11.3	1.8 + 1.8 + 3.5 + 4.2	1.59 + 1.59 + 3.10 + 3.72 2.90 ~ 10.99	10.00	3000 (550-3460)	13.77 - 13.18 - 12.63	3.33	2.07 ~ 2.07 + 3.56 + 4.30 3.00 ~ 12.70	12.00	3180 (540-4000)	14.60 - 13.97 - 13.38	3.77
	12.1	1.8 + 1.8 + 3.5 + 5.0	1.49 + 1.49 + 2.89 + 4.13 2.90 ~ 11.50	10.00	3200 (550-3700)	14.69 - 14.05 - 13.47	3.13	1.90 ~ 1.90 + 3.27 + 4.94 3.00 ~ 12.70	12.00	3690 (540-4500)	16.94 - 16.21 - 15.53	3.25
	13.1	1.8 + 1.8 + 3.5 + 6.0	1.37 + 1.37 + 2.67 + 4.58 2.90 ~ 12.00	10.00	3200 (550-3700)	14.69 - 14.05 - 13.47	3.13	1.79 ~ 1.79 + 3.07 + 5.36 3.00 ~ 12.70	12.00	3690 (540-4500)	16.94 - 16.21 - 15.53	3.25
	12.0	1.8 + 1.8 + 4.2 + 4.2	1.50 + 1.50 + 3.50 + 3.50 2.90 ~ 10.33	10.00	3200 (550-3700)	14.69 - 14.05 - 13.47	3.13	1.95 ~ 1.95 + 4.05 + 4.05 3.00 ~ 12.70	12.00	3690 (540-4500)	16.94 - 16.21 - 15.53	3.25
	12.8	1.8 + 1.8 + 4.2 + 5.0	1.41 + 1.41 + 3.28 + 3.91 2.90 ~ 10.80	10.00	3500 (550-4000)	16.07 - 15.37 - 14.73	2.86	1.80 ~ 1.80 + 3.74 + 4.67 3.00 ~ 12.70	12.00	3690 (540-4500)	16.94 - 16.21 - 15.53	3.25
	13.8	1.8 + 1.8 + 4.2 + 6.0	1.30 + 1.30 + 3.04 + 4.35 2.90 ~ 11.30	10.00	3500 (550-4000)	16.07 - 15.37 - 14.73	2.86	1.69 ~ 1.69 + 3.53 + 5.08 3.00 ~ 12.70	12.00	3690 (540-4500)	16.94 - 16.21 - 15.53	3.25
	13.6	1.8 + 1.8 + 5.0 + 5.0	1.32 + 1.32 + 3.68 + 3.68 2.90 ~ 11.20	10.00	3680 (550-4000)	16.90 - 16.16 - 15.49	2.72	1.67 ~ 1.67 + 4.33 + 4.33 3.00 ~ 12.70	12.00	3790 (540-4500)	17.40 - 16.64 - 15.95	3.17
	14.6	1.8 + 1.8 + 5.0 + 6.0	1.23 + 1.23 + 3.42 + 4.11 2.90 ~ 11.60	10.00	3680 (550-4000)	16.90 - 16.16 - 15.49	2.72	1.58 ~ 1.58 + 4.11 + 4.74 3.00 ~ 12.70	12.00	3790 (540-4500)	17.40 - 16.64 - 15.95	3.17
	15.6	1.8 + 1.8 + 6.0 + 6.0	1.23 + 1.23 + 4.11 + 4.11 2.90 ~ 12.00	10.00	3780 (550-4000)	17.36 - 16.60 - 15.91	2.65	1.50 ~ 1.50 + 4.50 + 4.50 3.00 ~ 12.70	12.00	3790 (540-4500)	17.40 - 16.64 - 15.95	3.17
	9.3	1.8 + 2.5 + 2.5 + 2.5	1.80 + 2.50 + 2.50 + 2.50 2.90 ~ 10.40	9.30	2600 (550-3460)	11.94 - 11.42 - 10.94	3.58	2.36 ~ 3.21 + 3.21 + 3.21 3.00 ~ 12.70	12.00	3050 (540-4000)	14.00 - 13.39 - 12.84	3.93
	10.3	1.8 + 2.5 + 2.5 + 3.5	1.75 + 2.43 + 2.43 + 3.40 2.90 ~ 10.99	10.00	2740 (550-3460)	12.58 - 12.03 - 11.53	3.65	2.21 ~ 3.00 + 3.00 + 3.79 3.00 ~ 12.70	12.00	3150 (540-4000)	14.46 - 13.83 - 13.26	3.81
	11.0	1.8 + 2.5 + 2.5 + 4.2	1.64 + 2.27 + 2.27 + 3.82 2.90 ~ 11.30	10.00	2900 (550-3460)	13.31 - 12.74 - 12.21	3.45	2.07 ~ 2.81 + 2.81 + 4.30 3.00 ~ 12.70	12.00	3290 (540-4000)	15.11 - 14.45 - 13.85	3.65
	11.8	1.8 + 2.5 + 2.5 + 5.0	1.53 + 2.12 + 2.12 + 4.24 2.90 ~ 11.80	10.00	3000 (550-3460)	13.77 - 13.18 - 12.63	3.33	1.90 ~ 2.58 + 2.58 + 4.94 3.00 ~ 12.70	12.00	3530 (540-4000)	16.21 - 15.50 - 14.86	3.40
	12.8	1.8 + 2.5 + 2.5 + 6.0	1.41 + 1.95 + 1.95 + 4.69 2.90 ~ 12.30	10.00	3100 (550-3460)	14.23 - 13.61 - 13.05	3.23	1.79 ~ 2.43 + 2.43 + 5.36 3.00 ~ 12.70	12.00	3530 (540-4000)	16.21 - 15.50 - 14.86	3.40
	11.3	1.8 + 2.5 + 3.5 + 3.5	1.59 + 2.21 + 3.10 + 3.10 2.90 ~ 10.99	10.00	3000 (550-3460)	13.77 - 13.18 - 12.63	3.33	2.07 ~ 2.81 + 3.56 + 3.56 3.00 ~ 12.70	12.00	3180 (540-4000)	14.60 - 13.97 - 13.38	3.77
	12.0	1.8 + 2.5 + 3.5 + 4.2	1.50 + 2.08 + 2.92 + 3.50 2.90 ~ 11.30	10.00	3100 (550-3460)	14.23 - 13.61 - 13.05	3.23	1.95 ~ 2.65 + 3.35 + 4.05 3.00 ~ 12.70	12.00	3280 (540-4000)	15.06 - 14.40 - 13.80	3.66
	12.8	1.8 + 2.5 + 3.5 + 5.0	1.41 + 1.95 + 2.73 + 3.91 2.90 ~ 11.80	10.00	3380 (550-4000)	15.52 - 14.84 - 14.23	2.96	1.80 ~ 2.44 + 3.09 + 4.67 3.00 ~ 12.70	12.00	3790 (540-4500)	17.40 - 16.64 - 15.95	3.17
	13.8	1.8 + 2.5 + 3.5 + 6.0	1.30 + 1.81 + 2.54 + 4.35 2.90 ~ 12.30	10.00	3550 (550-4000)	16.30 - 15.59 - 14.94	2.82	1.69 ~ 2.31 + 2.92 + 5.08 3.00 ~ 12.70	12.00	3790 (540-4500)	17.40 - 16.64 - 15.95	3.17
	12.7	1.8 + 2.5 + 4.2 + 4.2	1.42 + 1.97 + 3.31 + 3.31 2.90 ~ 11.30	10.00	3200 (550-3860)	14.69 - 14.05 - 13.47	3.13	1.84 ~ 2.50 + 3.83 + 3.83 3.00 ~ 12.70	12.00	3750 (540-4500)	17.22 - 16.47 - 15.78	3.20
	13.5	1.8 + 2.5 + 4.2 + 5.0	1.33 + 1.85 + 3.11 + 3.70 2.90 ~ 11.80	10.00	3690 (550-4000)	16.94 - 16.21 - 15.53	2.71	1.70 ~ 2.32 + 3.55 + 4.43 3.00 ~ 12.70	12.00	3750 (540-4500)	17.22 - 16.47 - 15.78	3.20
	14.5	1.8 + 2.5 + 4.2 + 6.0	1.24 + 1.72 + 2.90 + 4.14 2.90 ~ 12.30	10.00	3800 (550-4500)	17.45 - 16.69 - 15.99	2.63	1.61 ~ 2.19 + 3.35 + 4.84 3.00 ~ 12.70	12.00	3680 (540-4500)	16.90 - 16.16 - 15.49	3.26
	14.3	1.8 + 2.5 + 5.0 + 5.0	1.26 + 1.75 + 3.50 + 3.50 2.90 ~ 12.00	10.00	3980 (550-4500)	18.27 - 17.48 - 16.75	2.51	1.59 ~ 2.16 + 4.13 + 4.13 3.00 ~ 12.70	12.00	3680 (540-4500)	16.90 - 16.16 - 15.49	3.26
	15.3	1.8 + 2.5 + 5.0 + 6.0	1.18 + 1.63 + 3.27 + 3.92 2.90 ~ 12.50	10.00	4000 (550-4500)	18.37 - 17.57 - 16.84	2.50	1.51 ~ 2.05 + 3.92 + 4.52 3.00 ~ 12.70	12.00	3890 (540-4500)	17.86 - 17.08 - 16.37	3.08
	16.3	1.8 + 2.5 + 6.0 + 6.0	1.10 + 1.53 + 3.68 + 3.68 2.90 ~ 12.50	10.00	4000 (550-4500)	18.37 - 17.57 - 16.84	2.50	1.44 ~ 1.95 + 4.31 + 4.31 3.00 ~ 12.70	12.00	3890 (540-4500)	17.86 - 17.08 - 16.37	3.08
	12.3	1.8 + 3.5 + 3.5 + 3.5	1.46 + 2.85 + 2.85 + 2.85 2.90 ~ 10.90	10.00	3500 (550-4000)	16.07 - 15.37 - 14.73	2.86	1.95 ~ 3.35 + 3.35 + 3.35 3.00 ~ 12.70	12.00	3280 (540-4000)	15.06 - 14.40 - 13.80	3.66
	13.0	1.8 + 3.5 + 3.5 + 4.2	1.38 + 2.69 + 2.69 + 3.23 2.90 ~ 11.20	10.00	3620 (550-4500)	16.62 - 15.90 - 15.24	2.76	1.84 ~ 3.17 + 3.17 + 3.83 3.00 ~ 12.70	12.00	3350 (540-4000)	15.38 - 14.71 - 14.10	3.58
	13.8	1.8 + 3.5 + 3.5 + 5.0	1.30 + 2.54 + 2.54 + 3.62 2.90 ~ 11.70	10.00	3800 (550-4500)	17.45 - 16.69 - 15.99	2.63	1.70 ~ 2.93 + 2.93 + 4.43 3.00 ~ 12.70	12.00	3850 (540-4000)	17.68 - 16.91 - 16.20	3.12
	14.8	1.8 + 3.5 + 3.5 + 6.0	1.22 + 2.36 + 2.36 + 4.05 2.90 ~ 12.30	10.00	3800 (550-4500)	17.45 - 16.69 - 15.99	2.63	1.61 ~ 2.77 + 2.77 + 4.84 3.00 ~ 12.70	12.00	3850 (540-4000)	17.68 - 16.91 - 16.20	3.12
	13.7	1.8 + 3.5 + 4.2 + 4.2	1.31 + 2.55 + 3.07 + 3.07 2.90 ~ 11.50	10.00	3600 (550-4500)	16.53 - 15.81 - 15.15	2.78	1.74 ~ 3.00 + 3.63 + 3.63 3.00 ~ 12.70	12.00	2630 (540-4000)	12.08 - 11.55 - 11.07	4.56
	14.5	1.8 + 3.5 + 4.2 + 5.0	1.24 + 2.41 + 2.90 + 3.45 2.90 ~ 12.00	10.00	3900 (550-4500)	17.91 - 17.13 - 16.41	2.56	1.62 ~ 2.79 + 3.37 + 4.22 3.00 ~ 12.70	12.00	3850 (540-5000)	17.68 - 16.91 - 16.20	3.12
	15.5	1.8 + 3.5 + 4.2 + 6.0	1.16 + 2.26 + 2.71 + 3.87 2.90 ~ 12.50	10.00	4000 (550-4500)	18.37 - 17.57 - 16.84	2.50	1.54 ~ 2.65 + 3.20 + 4.62 3.00 ~ 12.70	12.00	3850 (540-5000)	17.68 - 16.91 - 16.20	3.12
	15.3	1.8 + 3.5 + 5.0 + 5.0	1.18 + 2.29 + 3.27 + 3.27 2.90 ~ 12.30	10.00	4000 (550-4500)	18.37 - 17.57 - 16.84	2.50	1.52 ~ 2.61 + 3.94 + 3.94 3.00 ~ 12.70	12.00	4000 (540-5000)	18.37 - 17.57 - 16.84	3.00
	16.3	1.8 + 3.5 + 5.0 + 6.0	1.10 + 2.15 + 3.07 + 3.68 2.90 ~ 12.50	10.00	4000 (550-4500)	18.37 - 17.57 - 16.84	2.50	1.44 ~ 2.48 + 3.75 + 4.33 3.00 ~ 12.70	12.00	4000 (540-5000)	18.37 - 17.57 - 16.84	3.00
	14.4	1.8 + 4.2 + 4.2 + 4.2	1.25 + 2.92 + 2.92 + 2.92 2.90 ~ 12.00	10.00	3850 (550-4500)	17.68 - 16.91 - 16.20	2.60	1.66 ~ 3.45 + 3.45 + 3.45 3.00 ~ 12.70	12.00	4000 (540-5000)	18.37 - 17.57 - 16.84	3.00
	15.2	1.8 + 4.2 + 4.2 + 5.0	1.18 + 2.76 + 2.76 + 3.29 2.90 ~ 12.30	10.00	4000 (550-4500)	18.37 - 17.57 - 16.84	2.50	1.55 ~ 3.22 + 3.22 + 4.02 3.00 ~ 12.70	12.00	4100 (540-5000)	18.82 - 18.01 - 17.26	2.93
	16.2	1.8 + 4.2 + 4.2 + 6.0	1.11 + 2.59 + 2.59 + 3.70 2.90 ~ 12.50	10.00	4000 (550-4500)	18.37 - 17.57 - 16.84	2.50	1.47 ~ 3.06 + 3.06 + 4.41 3.00 ~ 12.70	12.00	4100 (540-5000)	18.82 - 18.01 - 17.26	2.93
	16.2	1.8 + 4.2 + 5.0 + 5.0	1.11 + 2.59 + 3.09 + 3.09 2.90 ~ 12.50	10.00	4000 (550-4500)	18.37 - 17.57 - 16.84	2.50	1.45 ~ 3.01 + 3.77 + 3.77 3.00 ~ 12.70	12.00	4200 (540-5000)	19.28 - 18.45 - 17.68	2.86
	10.0	2.5 + 2.5 + 2.5 + 2.5	2.50 + 2.50 + 2.50 + 2.50 2.90 ~ 11.00	10.00	2800 (550-3460)	12.86 - 12.30 - 11.78	3.23	3.00 ~ 3.00 + 3.00 + 3.00 3.00 ~ 12.70	12.00	3150 (540-4000)	14.46 - 13.83 - 13.26	3.80
	11.0	2.5 + 2.5 + 2.5 + 3.5	2.27 + 2.27 + 2.27 + 3.18 2.90 ~ 11.50	10.00	3000 (550-3700)	13.77 - 13.18 - 12.63	3.20	2.81 ~ 2.81 + 2.81 + 3.56 3.00 ~ 12.70	12.00	3290 (540-4000)	15.11 - 14.45 - 13.85	3.65
	11.7	2.5 + 2.5 + 2.5 + 4.2	2.14 + 2.14 + 2.14 + 3.59 2.90 ~ 11.80	10.00	3150 (550-3700)	14.46 - 13.83 - 13.26	3.17	2.65 ~ 2.65 + 2.65 + 4.05 3.00 ~ 12.70	12.00	3690 (540-5000)	16.94 - 16.21 - 15.53	3.25
	12.5	2.5 + 2.5 + 2.5 + 5.0	2.00 + 2.00 + 2.00 + 4.00 2.90 ~ 12.30	10.00	3450 (550-4000)	15.84 - 15.15 - 14.52	2.90	2.44 ~ 2.44 + 2.44 + 4.67 3.00 ~ 12.70	12.00	3790 (540-5000)	17.40 - 16.64 - 15.95	3.17
	13.5	2.5 + 2.5 + 2.5 + 6.0	1.85 + 1.85 + 1.85 + 4.44 2.90 ~ 12.50	10.00	3500 (550-4000)	16.07 - 15.37 - 14.73	2.86	2.31 ~ 2.31 + 2.31 + 5.08 3.00 ~ 12.70	12.00	3790 (540-5000)	17.40 - 16.64 - 15.95	3.17
	12.0	2.5 + 2.5 + 3.5 + 3.5	2.08 + 2.08 + 2.92 + 2.92 2.90 ~ 11.90	10.00	3200 (550-3700)	14.69 - 14.05 - 13.47	3.13	2.65 ~ 2.65 + 3.35 + 3.35 3.00 ~ 12.70	12.00	3490 (540-5000)	16.02 - 15.33 - 14.69	3.44
	12.7	2.5 + 2.5 + 3.5 + 4.2	1.97 + 1.97 + 2.76 + 3.31 2.90 ~ 12.20	10.00	3400 (550-4000)	15.61 - 14.93 - 14.31	2.94	2.50 ~ 2.50 + 3.17 + 3.83 3.00 ~ 12.70	12.00	3790 (540-5000)	17.40 - 16.64 - 15.95	3.17
	13.5	2.5 + 2.5 + 3.5 + 5.0	1.85 + 1.85 + 2.59 + 3.70 2.90 ~ 12.60	10.00	3600 (550-4500)	16.53 - 15.81 - 15.15	2.78	2.32 ~ 2.32 + 2.93 + 4.43 3.00 ~ 12.70	12.00	4000 (540-5000)	18.37 - 17.57 - 16.84	3.00
	14.5	2.5 + 2.5 + 3.5 + 6.0	1.72 + 1.72 + 2.41 + 4.14 2.90 ~ 12.50	10.00	3800 (550-4500)	17.45 - 16.69

14.4	2.5 + 3.5 + 4.2 + 4.2	1.74 + 2.43 + 2.92 + 2.92 2.90 ~ 12.50	10.00	3820 (550-4500)	17.54 - 16.78 - 16.08	2.62	2.25 ~ 2.85 + 3.45 + 3.45 3.00 ~ 12.70	12.00	4100 (540-5000)	18.82 - 18.01 - 17.26	2.93
15.2	2.5 + 3.5 + 4.2 + 5.0	1.64 + 2.30 + 2.76 + 3.29 2.90 ~ 12.50	10.00	4000 (550-4500)	18.37 - 17.57 - 16.84	2.50	2.10 ~ 2.66 + 3.22 + 4.02 3.00 ~ 12.70	12.00	4200 (540-5000)	19.28 - 18.45 - 17.68	2.86
16.2	2.5 + 3.5 + 4.2 + 6.0	1.54 + 2.16 + 2.59 + 3.70 2.90 ~ 12.50	10.00	4000 (550-4500)	18.37 - 17.57 - 16.84	2.50	2.00 ~ 2.53 + 3.06 + 4.41 3.00 ~ 12.70	12.00	4200 (540-5000)	19.28 - 18.45 - 17.68	2.86
16.0	2.5 + 3.5 + 5.0 + 5.0	1.56 + 2.19 + 3.13 + 3.13 2.90 ~ 12.50	10.00	4000 (550-4500)	18.37 - 17.57 - 16.84	2.50	1.97 ~ 2.49 + 3.77 + 3.77 3.00 ~ 12.70	12.00	4200 (540-5000)	19.28 - 18.45 - 17.68	2.86
14.0	3.5 + 3.5 + 3.5 + 3.5	2.50 + 2.50 + 2.50 + 2.50 2.90 ~ 12.50	10.00	3800 (550-4500)	17.45 - 16.69 - 15.99	2.63	2.00 ~ 3.00 + 3.00 + 3.00 3.00 ~ 12.70	12.00	4200 (540-5000)	19.28 - 18.45 - 17.68	2.86
14.7	3.5 + 3.5 + 3.5 + 4.2	2.38 + 2.38 + 2.38 + 2.86 2.90 ~ 12.50	10.00	4000 (550-4500)	18.37 - 17.57 - 16.84	2.50	2.85 ~ 2.85 + 2.85 + 3.45 3.00 ~ 12.70	12.00	4300 (540-5000)	19.74 - 18.88 - 18.10	2.79
15.5	3.5 + 3.5 + 3.5 + 5.0	2.26 + 2.26 + 2.26 + 3.23 2.90 ~ 12.50	10.00	4000 (550-4500)	18.37 - 17.57 - 16.84	2.50	2.66 ~ 2.66 + 2.66 + 4.02 3.00 ~ 12.70	12.00	4500 (540-5000)	20.66 - 19.76 - 18.94	2.67
16.5	3.5 + 3.5 + 3.5 + 6.0	2.12 + 2.12 + 2.12 + 3.64 2.90 ~ 12.50	10.00	4000 (550-4500)	18.37 - 17.57 - 16.84	2.50	2.53 ~ 2.53 + 2.53 + 4.41 3.00 ~ 12.70	12.00	4500 (540-5000)	20.66 - 19.76 - 18.94	2.67
15.4	3.5 + 3.5 + 4.2 + 4.2	2.27 + 2.27 + 2.73 + 2.73 2.90 ~ 12.50	10.00	4000 (550-4500)	18.37 - 17.57 - 16.84	2.50	2.72 ~ 2.72 + 3.28 + 3.28 3.00 ~ 12.70	12.00	4500 (540-5000)	20.66 - 19.76 - 18.94	2.67
16.2	3.5 + 3.5 + 4.2 + 5.0	2.16 + 2.16 + 2.59 + 3.09 2.90 ~ 12.50	10.00	4000 (550-4500)	18.37 - 17.57 - 16.84	2.50	2.54 ~ 2.54 + 3.07 + 3.84 3.00 ~ 12.70	12.00	4500 (540-5000)	20.66 - 19.76 - 18.94	2.67
7.5	1.5 + 1.5 + 1.5 + 1.5 + 1.5	1.50 + 1.50 + 1.50 + 1.50 + 1.50 2.40 ~ 8.00	7.50	2200 (550-2800)	10.10 - 9.66 - 9.26	3.41	2.00 ~ 2.00 + 2.00 + 2.00 + 2.00 3.40 ~ 10.70	10.00	2350 (610-2820)	10.79 - 10.32 - 9.89	4.26
7.8	1.5 + 1.5 + 1.5 + 1.5 + 1.8	1.50 + 1.50 + 1.50 + 1.50 + 1.80 2.70 ~ 8.40	7.80	2280 (550-2800)	10.47 - 10.01 - 9.60	3.42	2.00 ~ 2.00 + 2.00 + 2.00 + 2.50 3.40 ~ 11.20	10.50	2450 (610-2832)	11.25 - 10.76 - 10.31	4.29
8.5	1.5 + 1.5 + 1.5 + 1.5 + 2.5	1.50 + 1.50 + 1.50 + 1.50 + 2.50 2.90 ~ 9.20	8.50	2330 (550-2800)	10.70 - 10.23 - 9.81	3.65	2.00 ~ 2.00 + 2.00 + 2.00 + 3.40 3.40 ~ 12.10	11.40	2550 (610-2880)	11.71 - 11.20 - 10.73	4.47
9.5	1.5 + 1.5 + 1.5 + 1.5 + 3.5	1.50 + 1.50 + 1.50 + 1.50 + 3.50 2.90 ~ 10.30	9.50	2720 (550-3460)	12.49 - 11.95 - 11.45	3.49	1.95 ~ 1.95 + 1.95 + 1.95 + 4.20 3.40 ~ 12.70	12.00	2850 (610-4000)	13.09 - 12.52 - 11.99	4.21
10.2	1.5 + 1.5 + 1.5 + 1.5 + 4.2	1.47 + 1.47 + 1.47 + 1.47 + 4.12 2.90 ~ 10.39	10.00	2930 (550-3460)	13.45 - 12.87 - 12.33	3.41	1.82 ~ 1.82 + 1.82 + 1.82 + 4.73 3.40 ~ 12.70	12.00	2950 (610-4000)	13.54 - 12.96 - 12.42	4.07
11.0	1.5 + 1.5 + 1.5 + 1.5 + 5.0	1.36 + 1.36 + 1.36 + 1.36 + 4.55 2.90 ~ 10.82	10.00	3000 (550-3460)	13.77 - 13.18 - 12.63	3.33	1.66 ~ 1.66 + 1.66 + 1.66 + 5.38 3.40 ~ 12.70	12.00	3290 (610-4000)	15.11 - 14.45 - 13.85	3.65
12.0	1.5 + 1.5 + 1.5 + 1.5 + 6.0	1.25 + 1.25 + 1.25 + 1.25 + 5.00 2.90 ~ 11.30	10.00	3000 (550-3460)	13.77 - 13.18 - 12.63	3.33	1.55 ~ 1.55 + 1.55 + 1.55 + 5.81 3.40 ~ 12.70	12.00	3290 (610-4000)	15.11 - 14.45 - 13.85	3.65
8.1	1.5 + 1.5 + 1.5 + 1.8 + 1.8	1.50 + 1.50 + 1.50 + 1.80 + 1.80 2.90 ~ 8.80	8.10	2150 (550-2292)	9.87 - 9.44 - 9.05	3.77	2.00 ~ 2.00 + 2.00 + 2.50 + 2.50 3.40 ~ 11.70	11.00	2480 (610-4000)	11.39 - 10.89 - 10.44	4.44
8.8	1.5 + 1.5 + 1.5 + 1.8 + 2.5	1.50 + 1.50 + 1.50 + 1.80 + 2.50 2.90 ~ 9.60	8.80	2200 (550-3460)	10.10 - 9.66 - 9.26	4.00	2.00 ~ 2.00 + 2.00 + 2.50 + 3.40 3.40 ~ 12.60	11.90	2580 (610-4000)	11.85 - 11.33 - 10.86	4.61
9.8	1.5 + 1.5 + 1.5 + 1.8 + 3.5	1.50 + 1.50 + 1.50 + 1.80 + 3.50 2.90 ~ 10.70	9.80	2620 (550-3460)	12.03 - 11.51 - 11.03	3.74	1.88 ~ 1.88 + 1.88 + 2.34 + 4.03 3.40 ~ 12.70	12.00	2780 (610-4000)	12.76 - 12.21 - 11.70	4.32
10.5	1.5 + 1.5 + 1.5 + 1.8 + 4.2	1.43 + 1.43 + 1.43 + 1.71 + 4.00 2.90 ~ 11.00	10.00	2620 (550-3460)	12.03 - 11.51 - 11.03	3.82	1.75 ~ 1.75 + 1.75 + 2.19 + 4.55 3.40 ~ 12.70	12.00	2780 (610-4000)	12.76 - 12.21 - 11.70	4.32
11.3	1.5 + 1.5 + 1.5 + 1.8 + 5.0	1.33 + 1.33 + 1.33 + 1.59 + 4.42 2.90 ~ 11.30	10.00	3000 (550-3460)	13.77 - 13.18 - 12.63	3.33	1.60 ~ 1.60 + 1.60 + 2.00 + 5.20 3.40 ~ 12.70	12.00	3490 (610-4000)	16.02 - 15.33 - 14.69	3.44
12.3	1.5 + 1.5 + 1.5 + 1.8 + 6.0	1.22 + 1.22 + 1.22 + 1.46 + 4.88 2.90 ~ 11.60	10.00	3000 (550-3460)	13.77 - 13.18 - 12.63	3.33	1.50 ~ 1.50 + 1.50 + 1.88 + 5.63 3.40 ~ 12.70	12.00	3490 (610-4000)	16.02 - 15.33 - 14.69	3.44
9.5	1.5 + 1.5 + 1.5 + 2.5 + 2.5	1.50 + 1.50 + 1.50 + 2.50 + 2.50 2.90 ~ 9.90	9.50	3000 (550-3460)	13.77 - 13.18 - 12.63	3.17	1.88 ~ 1.88 + 1.88 + 3.19 + 3.19 3.40 ~ 12.70	12.00	2680 (610-4000)	12.30 - 11.77 - 11.28	4.48
10.5	1.5 + 1.5 + 1.5 + 2.5 + 3.5	1.43 + 1.43 + 1.43 + 2.38 + 3.33 2.90 ~ 10.30	10.00	3000 (550-3460)	13.77 - 13.18 - 12.63	3.33	1.75 ~ 1.75 + 1.75 + 2.98 + 3.77 3.40 ~ 12.70	12.00	2980 (610-4000)	13.68 - 13.09 - 12.54	4.03
11.2	1.5 + 1.5 + 1.5 + 2.5 + 4.2	1.34 + 1.34 + 1.34 + 2.23 + 3.75 2.90 ~ 10.80	10.00	3000 (550-3460)	13.77 - 13.18 - 12.63	3.33	1.64 ~ 1.64 + 1.64 + 2.79 + 4.27 3.40 ~ 12.70	12.00	2980 (610-4000)	13.68 - 13.09 - 12.54	4.03
12.0	1.5 + 1.5 + 1.5 + 2.5 + 5.0	1.25 + 1.25 + 1.25 + 2.08 + 4.17 2.90 ~ 11.30	10.00	3500 (550-4000)	16.07 - 15.37 - 14.73	2.86	1.51 ~ 1.51 + 1.51 + 2.57 + 4.91 3.40 ~ 12.70	12.00	3590 (610-4000)	16.48 - 15.77 - 15.11	3.34
13.0	1.5 + 1.5 + 1.5 + 2.5 + 6.0	1.15 + 1.15 + 1.15 + 1.92 + 4.62 2.90 ~ 11.80	10.00	3500 (550-4000)	16.07 - 15.37 - 14.73	2.86	1.42 ~ 1.42 + 1.42 + 2.41 + 5.33 3.40 ~ 12.70	12.00	3590 (610-4000)	16.48 - 15.77 - 15.11	3.34
11.5	1.5 + 1.5 + 1.5 + 3.5 + 3.5	1.30 + 1.30 + 1.30 + 3.04 + 3.04 2.90 ~ 12.50	10.00	3500 (550-4000)	16.07 - 15.37 - 14.73	2.86	1.64 ~ 1.64 + 1.64 + 3.53 + 3.53 3.40 ~ 12.70	12.00	2980 (610-4000)	13.68 - 13.09 - 12.54	4.03
12.2	1.5 + 1.5 + 1.5 + 3.5 + 4.2	1.23 + 1.23 + 1.23 + 2.87 + 3.44 2.90 ~ 11.50	10.00	3500 (550-4000)	16.07 - 15.37 - 14.73	2.86	1.55 ~ 1.55 + 1.55 + 3.33 + 4.03 3.40 ~ 12.70	12.00	3290 (610-4000)	15.11 - 14.45 - 13.85	3.65
13.0	1.5 + 1.5 + 1.5 + 3.5 + 5.0	1.15 + 1.15 + 1.15 + 2.69 + 3.85 2.90 ~ 12.00	10.00	4000 (550-4500)	18.37 - 17.57 - 16.84	2.50	1.43 ~ 1.43 + 1.43 + 3.07 + 4.64 3.40 ~ 12.70	12.00	3690 (610-4500)	16.94 - 16.21 - 15.53	3.25
14.0	1.5 + 1.5 + 1.5 + 3.5 + 6.0	1.07 + 1.07 + 1.07 + 2.50 + 4.29 2.90 ~ 12.50	10.00	4000 (550-4500)	18.37 - 17.57 - 16.84	2.50	1.35 ~ 1.35 + 1.35 + 2.90 + 5.06 3.40 ~ 12.70	12.00	3690 (610-4500)	16.94 - 16.21 - 15.53	3.25
12.9	1.5 + 1.5 + 1.5 + 4.2 + 4.2	1.16 + 1.16 + 1.16 + 3.26 + 3.26 2.90 ~ 11.80	10.00	4000 (550-4500)	18.37 - 17.57 - 16.84	2.50	1.46 ~ 1.46 + 1.46 + 3.80 + 3.80 3.40 ~ 12.70	12.00	3380 (610-4500)	15.52 - 14.84 - 14.23	3.55
13.7	1.5 + 1.5 + 1.5 + 4.2 + 5.0	1.09 + 1.09 + 1.09 + 3.07 + 3.65 2.90 ~ 12.10	10.00	4000 (550-4500)	18.37 - 17.57 - 16.84	2.50	1.36 ~ 1.36 + 1.36 + 3.53 + 4.41 3.40 ~ 12.70	12.00	3780 (610-4500)	17.36 - 16.60 - 15.91	3.17
14.7	1.5 + 1.5 + 1.5 + 4.2 + 6.0	1.02 + 1.02 + 1.02 + 2.86 + 4.08 2.90 ~ 12.50	10.00	4000 (550-4500)	18.37 - 17.57 - 16.84	2.50	1.28 ~ 1.28 + 1.28 + 3.34 + 4.81 3.40 ~ 12.70	12.00	3780 (610-4500)	17.36 - 16.60 - 15.91	3.17
14.5	1.5 + 1.5 + 1.5 + 5.0 + 5.0	1.03 + 1.03 + 1.03 + 3.45 + 3.45 2.90 ~ 12.50	10.00	4000 (550-4500)	18.37 - 17.57 - 16.84	2.50	1.26 ~ 1.26 + 1.26 + 4.11 + 4.11 3.40 ~ 12.70	12.00	4000 (610-4500)	18.37 - 17.57 - 16.84	3.00
15.5	1.5 + 1.5 + 1.5 + 5.0 + 6.0	0.97 + 0.97 + 0.97 + 3.23 + 3.87 2.90 ~ 12.50	10.00	4000 (550-4500)	18.37 - 17.57 - 16.84	2.50	1.20 ~ 1.20 + 1.20 + 3.90 + 4.50 3.40 ~ 12.70	12.00	4000 (610-4500)	18.37 - 17.57 - 16.84	3.00
8.4	1.5 + 1.5 + 1.8 + 1.8 + 1.8	1.50 + 1.50 + 1.80 + 1.80 + 1.80 2.90 ~ 9.20	8.40	2180 (550-2292)	10.01 - 9.57 - 9.18	3.85	2.00 ~ 2.00 + 2.50 + 2.50 + 2.50 3.40 ~ 12.20	11.50	2530 (610-4000)	11.62 - 11.11 - 10.65	4.55
9.1	1.5 + 1.5 + 1.8 + 1.8 + 2.5	1.50 + 1.50 + 1.80 + 1.80 + 2.50 2.90 ~ 9.70	9.10	2490 (550-3460)	11.43 - 10.94 - 10.48	3.65	1.94 ~ 1.94 + 2.42 + 2.42 + 3.29 3.40 ~ 12.70	12.00	2630 (610-4000)	12.08 - 11.55 - 11.07	4.56
10.1	1.5 + 1.5 + 1.8 + 1.8 + 3.5	1.49 + 1.49 + 1.78 + 1.78 + 3.47 2.90 ~ 10.30	10.00	2690 (550-3460)	12.35 - 11.81 - 11.32	3.72	1.80 ~ 1.80 + 2.26 + 2.26 + 3.88 3.40 ~ 12.70	12.00	2890 (610-4000)	13.27 - 12.69 - 12.16	4.15
10.8	1.5 + 1.5 + 1.8 + 1.8 + 4.2	1.39 + 1.39 + 1.67 + 1.67 + 3.89 2.90 ~ 10.56	10.00	2690 (550-3460)	12.35 - 11.81 - 11.32	3.72	1.69 ~ 1.69 + 2.11 + 2.11 + 4.39 3.40 ~ 12.70	12.00	2890 (610-4000)	13.27 - 12.69 - 12.16	4.15
11.6	1.5 + 1.5 + 1.8 + 1.8 + 5.0	1.29 + 1.29 + 1.55 + 1.55 + 4.31 2.90 ~ 12.50	10.00	3000 (550-3660)	13.77 - 13.18 - 12.63	3.33	1.55 ~ 1.55 + 1.94 + 1.94 + 5.03 3.40 ~ 12.70	12.00	3590 (610-4000)	16.48 - 15.77 - 15.11	3.34
12.6	1.5 + 1.5 + 1.8 + 1.8 + 6.0	1.19 + 1.19 + 1.43 + 1.43 + 4.76 2.90 ~ 11.50	10.00	3000 (550-3660)	13.77 - 13.18 - 12.63	3.33	1.45 ~ 1.45 + 1.82 + 1.82 + 5.45 3.40 ~ 12.70	12.00	3590 (610-4000)	16.48 - 15.77 - 15.11	3.34
9.8	1.5 + 1.5 + 1.8 + 2.5 + 2.5	1.50 + 1.50 + 1.80 + 2.50 + 2.50 2.90 ~ 10.30	9.80	2690 (550-3460)	12.35 - 11.81 - 11.32	3.64	1.80 ~ 1.80 + 2.26 + 3.07 + 3.07 3.40 ~ 12.70	12.00	2780 (610-4000)	12.76 - 12.21 - 11.70	4.32
10.8	1.5 + 1.5 + 1.8 + 2.5 + 3.5	1.39 + 1.39 + 1.67 + 2.31 + 3.24 2.90 ~ 10.80	10.00	2690 (550-3460)	12.35 - 11.81 - 11.32	3.72	1.69 ~ 1.69 + 2.11 + 2.87 + 3.63 3.40 ~ 12.70	12.00	3030 (610-4000)	13.91 - 13.31 - 12.75	3.96
11.5	1.5 + 1.5 + 1.8 + 2.5 + 4.2	1.30 + 1.30 + 1.57 + 2.17 + 3.65 2.90 ~ 11.10	10.00	3000 (550-3660)	13.77 - 13.18 - 12.63	3.33	1.59 ~ 1.59 + 1.99 + 2.70 + 4.13 3.40 ~ 12.70	12.00	3030 (610-4000)	13.91 - 13.31 - 12.75	3.96
12.3	1.5 + 1.5 + 1.8 + 2.5 + 5.0	1.22 + 1.22 + 1.46 + 2.03 + 4.07 2.90 ~ 11.60	10.00	3380 (550-4000)	15.52 - 14.84 - 14.23	2.96	1.46 ~ 1.46 + 1.83 + 2.49 + 4.76 3.40 ~ 12.70	12.00	3650 (610-4000)	16.76 - 16.03 - 15.36	3.29
13.3	1.5 + 1.5 + 1.8 + 2.5 + 6.0	1.13 + 1.13 + 1.35 + 1.88 + 4.51 2.90 ~ 12.10	10.00	3380 (550-4000)	15.52 - 14.84 - 14.23	2.96	1.38 ~ 1.38 + 1.72 + 2.34 + 5.17 3.40 ~ 12.70	12.00	3650 (610-4000)	16.76 - 16.03 - 15.36	3.29
11.8	1.5 + 1.5 + 1.8 + 3.5 + 3.5	1.27 + 1.27 + 1.53 + 2.97 + 2.97 2.90 ~ 12.50	10.00	3380 (550-4000)	15.52 - 14.84 - 14.23	2.96	1.59 ~ 1.59 + 1.99 + 3.42 + 3.42 3.40 ~ 12.70	12.00	3190 (610-4000)	14.65 - 14.01 - 13.43	3.76
12.5	1.5 + 1.5 + 1.8 + 3.5 + 4.2	1.20 + 1.20 + 1.44 + 2.80 + 3.36 2.90 ~ 12.50	10.00	3380 (550-4000)	15.52 - 14.84 - 14.23	2.96	1.50 ~ 1.50 + 1.88 + 3.23 + 3.90 3.40 ~ 12.70	12.00	3290 (610-4000)	15.11 - 14.45 - 13.85	3.65
13.3	1.5 + 1.5 + 1.8 + 3.5 + 5.0	1.13 + 1.13 + 1.35 + 2.63 + 3.76 2.90 ~ 12.50	10.00	3820 (550-4500)	17.54 - 16.78 - 16.08	2.62	1.39 ~ 1.39 + 1.73 + 2.98 + 4.51 3.40 ~ 12.70	12.00	3780 (610-4500)	17.36 - 16.60 - 15.91	3.17
14.3	1.5 + 1.5 + 1.8 + 3.5 + 6.0	1.05 + 1.05 + 1.26 + 2.45 + 4.20 2.90 ~ 12.50	10.00	3820 (550-4500)	17.54 - 16.78 - 16.08	2.62	1.31 ~ 1.31 + 1.64 + 2.82 + 4.92 3.40 ~ 12.70	12.00	3780 (610-4500)	17.36 - 16.60 - 15.91	3.17
13.2	1.5 + 1.5 + 1.8 + 4.2 + 4.2	1.14 + 1.14 + 1.36 + 3.18 + 3.18 2.90 ~ 11.60	10.00	3820 (550-4500)	17.54 - 16.78 - 16.08	2.62	1.42 ~ 1.42 + 1.78 + 3.69 + 3.69 3.40 ~ 12.70	12.00	3780 (610-4500)	17.36 - 16.60 - 15.91	3.17
14.0	1.5 + 1.5 + 1.8 + 4.2 + 5.0	1.07 + 1.07 + 1.29 + 3.00 + 3.57 2.90 ~ 12.10	10.00	4000 (550-4500)	18.37 - 17.57 - 16.84	2.50	1.32 ~ 1.32 + 1.65 + 3.43 + 4.29 3.40 ~ 12.70	12.00	3780 (610-4500)	17.36 - 16.60 - 15.91	3.17
15.0	1.5 + 1.5 + 1.8 + 4.2 + 6.0	1.00 + 1.00 + 1.20 + 2.80 + 4.00 2.90 ~ 12.50	10.00	4000 (550-4500)	18.37 - 17.57 - 16.84	2.50	1.25 ~ 1.25 + 1.56 + 3.25 + 4.69 3.40 ~ 12.70	12.00	3780 (610-4500)	17.36 - 16.60 - 15.91	3.17
14.8	1.5 + 1.5 + 1.8 + 5.0 + 5.0	1.01 + 1.01 + 1.22 + 3.38 + 3.38 2.90 ~ 12.50	10.00	4000 (550-4500)	18.37 - 17.57 - 16.84	2.50	1.23 ~ 1.23 + 1.54 + 4.00 + 4.00 3.40 ~ 12.70	12.00	3890 (610-4500)	17.86 - 17.08 - 16.37	3.08
15.8	1.5 + 1.5 + 1.8 + 5.0 + 6.0	0.95 + 0.95 + 1.14 + 3.16 + 3.80 2.90 ~ 12.50	10.00	4000 (550-4500)	18.37 - 17.57 - 16.84	2.50	1.17 ~ 1.17 + 1.46 + 3.80 + 4.39 3.40 ~ 12.70	12.00	3890 (610-4500)	17.86 - 17.08 - 16.37	3.08
10.5	1.5 + 1.5 + 2.5 + 2.5 + 2.5	1.43 + 1.43 + 2.38 + 2.38 + 2.38 2.90 ~ 11.05	10.00	2690 (550-3460)	12.35 - 11.81 - 11.32	3.72	1.69 ~ 1.69 + 2.87 + 2.87 + 2.87 3.40 ~ 12.70	12.00	2890 (610-4000)	13.27 - 12.69 - 12.16	4.15
11.5	1.5 + 1.5 + 2.5 + 2.5 + 3.5	1.30 + 1.30 + 2.17 + 2.17 + 3.04 2.90 ~ 11.50	10.00	3000 (550-3460)	13.77 - 13.18 - 12.63	3.33	1.59 ~ 1.59 + 2.70 + 2.70 + 3.42 3.40 ~ 12.70	12.00	3130 (610-4000)	14.37 - 13.75 - 13.17	3.83
12.2	1.5 + 1.5 + 2.5 + 2.5 + 4.2	1.23 + 1.23 + 2.05 + 2.05 + 3.44 2.90 ~ 11.80	10.00	3280 (550-3800)	15.06 - 14.40 - 13.80	3.05	1.50 ~ 1.50 + 2.55 + 2.55 + 3.90 3.40 ~ 12.70	12.00	3130 (610-4000)	14.37 - 13.75 - 13.17	3.83
13.0	1.5 + 1.5 + 2.5 + 2.5 + 5.0	1.15 + 1.15 + 1.92 + 1.92 + 3.85 2.90 ~ 12.10	10.00	3480 (550-4000)	15.98 - 15.28 - 14.65	2.87	1.39 ~ 1.39 + 2.36 + 2.36 + 4.51 3.40 ~ 12.70	12.00	3780 (610-4000)	17.36 - 16.60 - 15.91	3.17
14.0	1.5 + 1.5 + 2.5 + 2.5 + 6.0	1.07 + 1.07 + 1.79 + 1.79 + 4.29 2.90 ~ 12.50	10.00	3480 (550-4000)	15.98 - 15.28 - 14.65	2.87	1.31 ~ 1.31 + 2.23 + 2.23 + 4.92 3.40 ~ 12.70	12.00	3780 (610-4000)	17.36 - 16.60 - 15.91	3.17
12.5	1.5 + 1.5 + 2.5 + 3.5 + 3.5	1.20 + 1.20 + 2.00 + 2.80 + 2.80 2.90 ~ 12.00	10.00	3280 (550-3800)	15.06 - 14.40 - 13.80	3.05	1.50 ~ 1.50 + 2.55 + 3.23 + 3.23 3.40 ~ 12.70	12.00	3250 (610-4000)	14.92 - 14.27 - 13.68	3.69
13.2	1.5 + 1.5 + 2.5 + 3.5 + 4.2	1.14 + 1.14 + 1.89 + 2.65 + 3.18 2.90 ~ 12.50	10.00	3480 (550-4000)	15.98 - 15.28 - 14.65	2.87	1.42 ~ 1.42 + 2.41 + 3.05 + 3.69 3.40 ~ 12.70	12.00	3350 (610-4000)	15.38 - 14.71 - 14.10	3.58
14.0	1.5 + 1.5 + 2.5 + 3.5 + 5.0	1.07 + 1.07 + 1.79 + 2.50 + 3.57 2.90 ~ 12.50	10.00	3620 (550-4000)	16.62 - 15.90 - 15.24	2.76	1.32 ~ 1.32 + 2.24 + 2.84 + 4.29 3.40 ~ 12.70	12.00	3890 (610-5000)	17.86 - 17.08 - 16.37	3.08
15.0	1.5 + 1.5 + 2.5 + 3.5 + 6.0	1.00 + 1.00 + 1.67 + 2.33 + 4.00 2.90 ~ 12.50	10.00	3620 (550-4000)	16.62 - 15.90 - 15.24	2.76	1.25 ~ 1.25 + 2.13 + 2.69 + 4.69 3.40 ~ 12.70	12.00	3890 (610-5000)	17.86 - 17.08 - 16.37	3.08
13.9	1.5 + 1.5 + 2.5 + 4.2 + 4.2	1.08 + 1.08 + 1.80 + 3.02 + 3.02 2.90 ~ 12.50	10.00	3620 (550-4000)	16.62 - 15.90 - 15.24	2.76	1.35 ~ 1.35 + 2.29 + 3.51 + 3.51 3.40 ~ 12.70	12.00	3890 (610-5000)	17.86 - 17.08 - 16.37	3.08
14.7	1.5 + 1.5 + 2.5 + 4.2 + 5.0	1.02 + 1.02 + 1.70 + 2.86 + 3.40 2.90 ~ 12.50	10.00	4000 (550-4500)	18.37 - 17.57 - 16.84	2.50	1.26 ~ 1.26 + 2.14 + 3.27 + 4.08 3.40 ~ 12.70	12.00	3890 (610-5000)	17.86 - 17.08 - 16.37	3.08
15.5	1.5 + 1.5 + 2.5 + 5.0 + 5.0	0.97 + 0.97 + 1.61 + 3.23 + 3.23 2.90 ~ 12.50	10.00	4000 (550-4500)	18.37 - 17.57 - 16.84	2.50	1.18 ~ 1.18 + 2.00 + 3.82 + 3.82 3.40 ~ 12.70	12.00	4000 (610-5000)	18.37 - 17.57 - 16.84	3.00
16.5	1.5 + 1.5 + 2.5 + 5.0 + 6.0	0.91 + 0.91 + 1.52 + 3.03 + 3.64 2.90 ~ 12.50	10.00	4000 (550-4500)	18.37 - 17.57 - 16.84	2.50	1.12 ~ 1.12 + 1.91 + 3.64 + 4.21 3.40 ~ 12.70	12.00	4000 (610-5000)	18.37 - 17.57 - 16.84	3.00
13.5	1.5 + 1.5 + 3.5 + 3.5 + 3.5	1.11 + 1.11 + 2.59 + 2.59 + 2.59 2.90 ~ 12.50	10.00	3620 (550-4000)	16.62 - 15.90 - 15.24	2.76	1.42 ~ 1.42 + 3.05 + 3.05 + 3.05 3.40 ~ 12.70	12.00	3360 (610-4000)	15.43 - 14.76 - 14.14	3.57
14.2	1.5 + 1.5 + 3.5 + 3.5 + 4.2	1.06 + 1.06 + 2.46 + 2.46 + 2.96 2.90 ~ 12.50	10.00	3620 (550-4000)	16.62 - 15.90 - 15.24	2.76	1.35 ~ 1.35 + 2.90 + 2.90 + 3.51 3.40 ~ 12.70	12.00	3360 (610-4000)	15.43 - 14.76 - 14.14	3.57
15.0	1.5 + 1.5 + 3.5 + 3.5 + 5.0	1.00 + 1.00 + 2.33 + 2.33 + 3.33 2.90 ~ 12.50	10.00	4000 (550-4500)	18.37 - 17.57 - 16.84	2.50	1.26 ~ 1.26 + 2.70 + 2.70 + 4.08 3.40 ~ 12.70	12.00	3890 (610-5000)	17.86 - 17.08 - 16.37	3.08
16.0	1.5 + 1.5 + 3.5 + 3.5 + 6.0	0.94 + 0.94 + 2.19 + 2.19 + 3.75 2.90 ~ 12.50	10.00	4000 (550-4500)	18.37 - 17.57 - 16.84	2.50	1.19 ~ 1.19 + 2.57 + 2.57 + 4.48 3.40 ~ 12.70	12.00	3890 (610-5000)	17.86 - 17.08 - 16.37	3.08
8.7	1.5 + 1.8 + 1.8 + 1.8 + 1.8	1.50 + 1.80 + 1.80 + 1.80 + 1.80 2.90 ~ 9.60	8.70	2530 (550-3460)	11.62 - 11.11 - 10.65	3.44	2.00 ~ 2.50 + 2.50 + 2.50 + 2.50 3.40 ~ 12.70	12.00	2630 (610-4000)	12.08 - 11.55 - 11.07	4.56
9.4	1.5 + 1

FIVE UNITS

14.3	1.5 + 1.8 + 1.8 + 4.2 + 5.0	1.05 + 1.26 + 1.26 + 2.94 + 3.50 2.90 ~ 12.50	10.00	3680 (550-4500)	16.90 - 16.16 - 15.49	2.72	1.28 ~ 1.60 + 1.60 + 3.34 + 4.17 3.40 ~ 12.70	12.00	3890 (610-5000)	17.86 - 17.08 - 16.37	3.08
15.3	1.5 + 1.8 + 1.8 + 4.2 + 6.0	0.98 + 1.18 + 1.18 + 2.75 + 3.92 2.90 ~ 12.50	10.00	4000 (550-4500)	18.37 - 17.57 - 16.84	2.50	1.22 ~ 1.52 + 1.52 + 3.17 + 4.57 3.40 ~ 12.70	12.00	3890 (610-5000)	17.86 - 17.08 - 16.37	3.08
15.1	1.5 + 1.8 + 1.8 + 5.0 + 5.0	0.99 + 1.19 + 1.19 + 3.31 + 3.31 2.90 ~ 12.50	10.00	4000 (550-4500)	18.37 - 17.57 - 16.84	2.50	1.20 ~ 1.50 + 1.50 + 3.90 + 3.90 3.40 ~ 12.70	12.00	4000 (610-5000)	18.37 - 17.57 - 16.84	3.00
16.1	1.5 + 1.8 + 1.8 + 5.0 + 6.0	0.93 + 1.12 + 1.12 + 3.11 + 3.73 2.90 ~ 12.50	10.00	4000 (550-4500)	18.37 - 17.57 - 16.84	2.50	1.14 ~ 1.43 + 1.43 + 3.71 + 4.29 3.40 ~ 12.70	12.00	4000 (610-5000)	18.37 - 17.57 - 16.84	3.00
10.8	1.5 + 1.8 + 2.5 + 2.5 + 2.5	1.39 + 1.67 + 2.31 + 2.31 + 2.31 2.90 ~ 11.11	10.00	3000 (550-3460)	13.77 - 13.18 - 12.63	3.33	1.63 ~ 2.04 + 2.78 + 2.78 + 2.78 3.40 ~ 12.70	12.00	2980 (610-4000)	13.68 - 13.09 - 12.54	4.03
11.8	1.5 + 1.8 + 2.5 + 2.5 + 3.5	1.27 + 1.53 + 2.12 + 2.12 + 2.97 2.90 ~ 12.50	10.00	3000 (550-3460)	13.77 - 13.18 - 12.63	3.33	1.54 ~ 1.92 + 2.62 + 2.62 + 3.31 3.40 ~ 12.70	12.00	3030 (610-4000)	13.91 - 13.31 - 12.75	3.96
12.5	1.5 + 1.8 + 2.5 + 2.5 + 4.2	1.20 + 1.44 + 2.00 + 2.00 + 3.36 2.90 ~ 12.50	10.00	3260 (550-3800)	14.97 - 14.32 - 13.72	3.07	1.45 ~ 1.82 + 2.47 + 2.47 + 3.78 3.40 ~ 12.70	12.00	3250 (610-4000)	14.92 - 14.27 - 13.68	3.69
13.3	1.5 + 1.8 + 2.5 + 2.5 + 5.0	1.13 + 1.35 + 1.88 + 1.88 + 3.76 2.90 ~ 12.50	10.00	3680 (550-4000)	16.90 - 16.16 - 15.49	2.72	1.35 ~ 1.69 + 2.29 + 2.29 + 4.38 3.40 ~ 12.70	12.00	3890 (610-5000)	17.86 - 17.08 - 16.37	3.08
14.3	1.5 + 1.8 + 2.5 + 2.5 + 6.0	1.05 + 1.26 + 1.75 + 1.75 + 4.20 2.90 ~ 12.50	10.00	3680 (550-4000)	16.90 - 16.16 - 15.49	2.72	1.28 ~ 1.60 + 2.17 + 2.17 + 4.79 3.40 ~ 12.70	12.00	3890 (610-5000)	17.86 - 17.08 - 16.37	3.08
12.8	1.5 + 1.8 + 2.5 + 3.5 + 3.5	1.17 + 1.41 + 1.95 + 2.73 + 2.73 2.90 ~ 12.50	10.00	3680 (550-4000)	16.90 - 16.16 - 15.49	2.72	1.45 ~ 1.82 + 2.47 + 3.13 + 3.13 3.40 ~ 12.70	12.00	3130 (610-4000)	14.37 - 13.75 - 13.17	3.83
13.5	1.5 + 1.8 + 2.5 + 3.5 + 4.2	1.11 + 1.33 + 1.85 + 2.59 + 3.11 2.90 ~ 12.50	10.00	3680 (550-4000)	16.90 - 16.16 - 15.49	2.72	1.38 ~ 1.72 + 2.34 + 2.97 + 3.59 3.40 ~ 12.70	12.00	3290 (610-4000)	15.11 - 14.45 - 13.85	3.65
14.3	1.5 + 1.8 + 2.5 + 3.5 + 5.0	1.05 + 1.26 + 1.75 + 2.45 + 3.50 2.90 ~ 12.50	10.00	4000 (550-4500)	18.37 - 17.57 - 16.84	2.50	1.28 ~ 1.60 + 2.18 + 2.76 + 4.17 3.40 ~ 12.70	12.00	4000 (610-5000)	18.37 - 17.57 - 16.84	3.00
15.3	1.5 + 1.8 + 2.5 + 3.5 + 6.0	0.98 + 1.18 + 1.63 + 2.29 + 3.92 2.90 ~ 12.50	10.00	4000 (550-4500)	18.37 - 17.57 - 16.84	2.50	1.22 ~ 1.52 + 2.07 + 2.62 + 4.57 3.40 ~ 12.70	12.00	4000 (610-5000)	18.37 - 17.57 - 16.84	3.00
14.2	1.5 + 1.8 + 2.5 + 4.2 + 4.2	1.06 + 1.27 + 1.76 + 2.96 + 2.96 2.90 ~ 12.50	10.00	4000 (550-4500)	18.37 - 17.57 - 16.84	2.50	1.31 ~ 1.64 + 2.23 + 3.41 + 3.41 3.40 ~ 12.70	12.00	4000 (610-5000)	18.37 - 17.57 - 16.84	3.00
15.0	1.5 + 1.8 + 2.5 + 4.2 + 5.0	1.00 + 1.20 + 1.67 + 2.80 + 3.33 2.90 ~ 12.50	10.00	4000 (550-4500)	18.37 - 17.57 - 16.84	2.50	1.22 ~ 1.53 + 2.08 + 3.18 + 3.98 3.40 ~ 12.70	12.00	4200 (610-5000)	19.28 - 18.45 - 17.68	2.86
16.0	1.5 + 1.8 + 2.5 + 4.2 + 6.0	0.94 + 1.13 + 1.56 + 2.63 + 3.75 2.90 ~ 12.50	10.00	4000 (550-4500)	18.37 - 17.57 - 16.84	2.50	1.17 ~ 1.46 + 1.98 + 3.03 + 4.37 3.40 ~ 12.70	12.00	4200 (610-5000)	19.28 - 18.45 - 17.68	2.86
13.8	1.5 + 1.8 + 3.5 + 3.5 + 3.5	1.09 + 1.30 + 2.54 + 2.54 + 2.54 2.90 ~ 12.50	10.00	4000 (550-4500)	18.37 - 17.57 - 16.84	2.50	1.38 ~ 1.72 + 2.97 + 2.97 + 2.97 3.40 ~ 12.70	12.00	3280 (610-4000)	15.06 - 14.40 - 13.80	3.66
14.5	1.5 + 1.8 + 3.5 + 3.5 + 4.2	1.03 + 1.24 + 2.41 + 2.41 + 2.90 2.90 ~ 12.50	10.00	4000 (550-4500)	18.37 - 17.57 - 16.84	2.50	1.31 ~ 1.64 + 2.82 + 2.82 + 3.41 3.40 ~ 12.70	12.00	3390 (610-4000)	15.56 - 14.89 - 14.27	3.54
15.3	1.5 + 1.8 + 3.5 + 3.5 + 5.0	0.98 + 1.18 + 2.29 + 2.29 + 3.27 2.90 ~ 12.50	10.00	4000 (550-4500)	18.37 - 17.57 - 16.84	2.50	1.22 ~ 1.53 + 2.63 + 2.63 + 3.98 3.40 ~ 12.70	12.00	4000 (610-5000)	18.37 - 17.57 - 16.84	3.00
11.5	1.5 + 2.5 + 2.5 + 2.5 + 2.5	1.30 + 2.17 + 2.17 + 2.17 + 2.17 2.90 ~ 12.50	10.00	3000 (550-3460)	13.77 - 13.18 - 12.63	3.33	1.54 ~ 2.62 + 2.62 + 2.62 + 2.62 3.40 ~ 12.70	12.00	3090 (610-4000)	14.19 - 13.57 - 13.01	3.88
12.5	1.5 + 2.5 + 2.5 + 2.5 + 3.5	1.20 + 2.00 + 2.00 + 2.00 + 2.80 2.90 ~ 12.50	10.00	3000 (550-3460)	13.77 - 13.18 - 12.63	3.33	1.45 ~ 2.47 + 2.47 + 2.47 + 3.13 3.40 ~ 12.70	12.00	3190 (610-4000)	14.65 - 14.01 - 13.43	3.76
13.2	1.5 + 2.5 + 2.5 + 2.5 + 4.2	1.14 + 1.89 + 1.89 + 1.89 + 3.18 2.90 ~ 12.50	10.00	3260 (550-3800)	14.97 - 14.32 - 13.72	3.07	1.38 ~ 2.34 + 2.34 + 2.34 + 3.59 3.40 ~ 12.70	12.00	3290 (610-4000)	15.11 - 14.45 - 13.85	3.65
14.0	1.5 + 2.5 + 2.5 + 2.5 + 5.0	1.07 + 1.79 + 1.79 + 1.79 + 3.57 2.90 ~ 12.50	10.00	3680 (550-4000)	16.90 - 16.16 - 15.49	2.72	1.28 ~ 2.18 + 2.18 + 2.18 + 4.17 3.40 ~ 12.70	12.00	4000 (610-4000)	18.37 - 17.57 - 16.84	3.00
15.0	1.5 + 2.5 + 2.5 + 2.5 + 6.0	1.00 + 1.67 + 1.67 + 1.67 + 4.00 2.90 ~ 12.50	10.00	3680 (550-4000)	16.90 - 16.16 - 15.49	2.72	1.22 ~ 2.07 + 2.07 + 2.07 + 4.57 3.40 ~ 12.70	12.00	4000 (610-4000)	18.37 - 17.57 - 16.84	3.00
13.5	1.5 + 2.5 + 2.5 + 3.5 + 3.5	1.11 + 1.85 + 1.85 + 2.59 + 2.59 2.90 ~ 12.50	10.00	3680 (550-4000)	16.90 - 16.16 - 15.49	2.72	1.38 ~ 2.34 + 2.34 + 2.97 + 2.97 3.40 ~ 12.70	12.00	3290 (610-4000)	15.11 - 14.45 - 13.85	3.65
14.2	1.5 + 2.5 + 2.5 + 3.5 + 4.2	1.06 + 1.76 + 1.76 + 2.46 + 2.96 2.90 ~ 12.50	10.00	3680 (550-4000)	16.90 - 16.16 - 15.49	2.72	1.31 ~ 2.23 + 2.23 + 2.82 + 3.41 3.40 ~ 12.70	12.00	3390 (610-4000)	15.56 - 14.89 - 14.27	3.54
15.0	1.5 + 2.5 + 2.5 + 3.5 + 5.0	1.00 + 1.67 + 1.67 + 2.33 + 3.33 2.90 ~ 12.50	10.00	4000 (550-4500)	18.37 - 17.57 - 16.84	2.50	1.22 ~ 2.08 + 2.08 + 2.63 + 3.98 3.40 ~ 12.70	12.00	4100 (610-4000)	18.82 - 18.01 - 17.26	2.93
16.0	1.5 + 2.5 + 2.5 + 3.5 + 6.0	0.94 + 1.56 + 1.56 + 2.19 + 3.75 2.90 ~ 12.50	10.00	4000 (550-4500)	18.37 - 17.57 - 16.84	2.50	1.17 ~ 1.98 + 1.98 + 2.50 + 4.37 3.40 ~ 12.70	12.00	4100 (610-4000)	18.82 - 18.01 - 17.26	2.93
14.9	1.5 + 2.5 + 2.5 + 4.2 + 4.2	1.01 + 1.68 + 1.68 + 2.82 + 2.82 2.90 ~ 12.50	10.00	4000 (550-4500)	18.37 - 17.57 - 16.84	2.50	1.25 ~ 2.13 + 2.13 + 3.25 + 3.25 3.40 ~ 12.70	12.00	4000 (610-4000)	18.37 - 17.57 - 16.84	3.00
15.7	1.5 + 2.5 + 2.5 + 4.2 + 5.0	0.96 + 1.59 + 1.59 + 2.68 + 3.18 2.90 ~ 12.50	10.00	4000 (550-4500)	18.37 - 17.57 - 16.84	2.50	1.17 ~ 1.99 + 1.99 + 3.04 + 3.80 3.40 ~ 12.70	12.00	4200 (610-4000)	19.28 - 18.45 - 17.68	2.86
16.5	1.5 + 2.5 + 2.5 + 5.0 + 5.0	0.91 + 1.52 + 1.52 + 3.03 + 3.03 2.90 ~ 12.50	10.00	4000 (550-4500)	18.37 - 17.57 - 16.84	2.50	1.10 ~ 1.87 + 1.87 + 3.58 + 3.58 3.40 ~ 12.70	12.00	4200 (610-4000)	19.28 - 18.45 - 17.68	2.86
14.5	1.5 + 2.5 + 3.5 + 3.5 + 3.5	1.03 + 1.72 + 2.41 + 2.41 + 2.41 2.90 ~ 12.50	10.00	4000 (550-4500)	18.37 - 17.57 - 16.84	2.50	1.31 ~ 2.23 + 2.82 + 2.82 + 2.82 3.40 ~ 12.70	12.00	3390 (610-4000)	15.56 - 14.89 - 14.27	3.54
15.2	1.5 + 2.5 + 3.5 + 3.5 + 4.2	0.99 + 1.64 + 2.30 + 2.30 + 2.76 2.90 ~ 12.50	10.00	4000 (550-4500)	18.37 - 17.57 - 16.84	2.50	1.25 ~ 2.13 + 2.69 + 2.69 + 3.25 3.40 ~ 12.70	12.00	3490 (610-4000)	16.02 - 15.33 - 14.69	3.44
16.0	1.5 + 2.5 + 3.5 + 3.5 + 5.0	0.94 + 1.56 + 2.19 + 2.19 + 3.13 2.90 ~ 12.50	10.00	4000 (550-4500)	18.37 - 17.57 - 16.84	2.50	1.17 ~ 1.99 + 2.52 + 2.52 + 3.80 3.40 ~ 12.70	12.00	4200 (610-4000)	19.28 - 18.45 - 17.68	2.86
15.9	1.5 + 2.5 + 3.5 + 4.2 + 4.2	0.94 + 1.57 + 2.20 + 2.64 + 2.64 2.90 ~ 12.50	10.00	4000 (550-4500)	18.37 - 17.57 - 16.84	2.50	1.19 ~ 2.03 + 2.57 + 3.10 + 3.10 3.40 ~ 12.70	12.00	4200 (610-4000)	19.28 - 18.45 - 17.68	2.86
9.0	1.8 + 1.8 + 1.8 + 1.8 + 1.8	1.80 + 1.80 + 1.80 + 1.80 + 1.80 2.90 ~ 10.00	9.00	2530 (600-3040)	11.62 - 11.11 - 10.65	3.56	2.40 ~ 2.40 + 2.40 + 2.40 + 2.40 3.40 ~ 12.70	12.00	2780 (610-4000)	12.76 - 12.21 - 11.70	4.32
9.7	1.8 + 1.8 + 1.8 + 1.8 + 2.5	1.80 + 1.80 + 1.80 + 1.80 + 2.50 2.90 ~ 10.80	9.70	2690 (600-3040)	12.35 - 11.81 - 11.32	3.61	2.24 ~ 2.24 + 2.24 + 2.24 + 3.04 3.40 ~ 12.70	12.00	2890 (610-4000)	13.27 - 12.69 - 12.16	4.15
10.7	1.8 + 1.8 + 1.8 + 1.8 + 3.5	1.68 + 1.68 + 1.68 + 1.68 + 3.27 2.90 ~ 11.12	10.00	2690 (600-3040)	12.35 - 11.81 - 11.32	3.72	2.10 ~ 2.10 + 2.10 + 2.10 + 3.61 3.40 ~ 12.70	12.00	2980 (610-4000)	13.68 - 13.09 - 12.54	4.03
11.4	1.8 + 1.8 + 1.8 + 1.8 + 4.2	1.58 + 1.58 + 1.58 + 1.58 + 3.68 2.90 ~ 11.50	10.00	3000 (600-3600)	13.77 - 13.18 - 12.63	3.33	1.97 ~ 1.97 + 1.97 + 1.97 + 4.11 3.40 ~ 12.70	12.00	3230 (610-4000)	14.83 - 14.19 - 13.59	3.72
12.2	1.8 + 1.8 + 1.8 + 1.8 + 5.0	1.48 + 1.48 + 1.48 + 1.48 + 4.10 2.90 ~ 11.90	10.00	3260 (600-3600)	14.97 - 14.32 - 13.72	3.07	1.82 ~ 1.82 + 1.82 + 1.82 + 4.73 3.40 ~ 12.70	12.00	3890 (610-5000)	17.86 - 17.08 - 16.37	3.08
13.2	1.8 + 1.8 + 1.8 + 1.8 + 6.0	1.36 + 1.36 + 1.36 + 1.36 + 4.55 2.90 ~ 12.40	10.00	3260 (600-3600)	14.97 - 14.32 - 13.72	3.07	1.71 ~ 1.71 + 1.71 + 1.71 + 5.14 3.40 ~ 12.70	12.00	3890 (610-5000)	17.86 - 17.08 - 16.37	3.08
10.4	1.8 + 1.8 + 1.8 + 2.5 + 2.5	1.73 + 1.73 + 1.73 + 2.40 + 2.40 2.90 ~ 11.15	10.00	2690 (600-3040)	12.35 - 11.81 - 11.32	3.72	2.10 ~ 2.10 + 2.10 + 2.85 + 2.85 3.40 ~ 12.70	12.00	2890 (610-4000)	13.27 - 12.69 - 12.16	4.15
11.4	1.8 + 1.8 + 1.8 + 2.5 + 3.5	1.58 + 1.58 + 1.58 + 2.19 + 3.07 2.90 ~ 11.60	10.00	3000 (600-3600)	13.77 - 13.18 - 12.63	3.33	1.97 ~ 1.97 + 1.97 + 2.68 + 3.39 3.40 ~ 12.70	12.00	2980 (610-4000)	13.68 - 13.09 - 12.54	4.03
12.1	1.8 + 1.8 + 1.8 + 2.5 + 4.2	1.49 + 1.49 + 1.49 + 2.07 + 3.47 2.90 ~ 11.90	10.00	3260 (600-3600)	14.97 - 14.32 - 13.72	3.07	1.86 ~ 1.86 + 1.86 + 2.53 + 3.88 3.40 ~ 12.70	12.00	3360 (610-4000)	15.43 - 14.76 - 14.14	3.57
12.9	1.8 + 1.8 + 1.8 + 2.5 + 5.0	1.40 + 1.40 + 1.40 + 1.94 + 3.88 2.90 ~ 12.30	10.00	3260 (600-3600)	14.97 - 14.32 - 13.72	3.07	1.72 ~ 1.72 + 1.72 + 2.34 + 4.48 3.40 ~ 12.70	12.00	4000 (610-5000)	18.37 - 17.57 - 16.84	3.00
13.9	1.8 + 1.8 + 1.8 + 2.5 + 6.0	1.29 + 1.29 + 1.29 + 1.80 + 4.32 2.90 ~ 12.50	10.00	3680 (600-3600)	16.90 - 16.16 - 15.49	2.72	1.63 ~ 1.63 + 1.63 + 2.22 + 4.89 3.40 ~ 12.70	12.00	4000 (610-5000)	18.37 - 17.57 - 16.84	3.00
12.4	1.8 + 1.8 + 1.8 + 3.5 + 3.5	1.45 + 1.45 + 1.45 + 2.82 + 2.82 2.90 ~ 12.50	10.00	3260 (600-3600)	14.97 - 14.32 - 13.72	3.07	1.86 ~ 1.86 + 1.86 + 3.20 + 3.20 3.40 ~ 12.70	12.00	2980 (610-4000)	13.68 - 13.09 - 12.54	4.03
13.1	1.8 + 1.8 + 1.8 + 3.5 + 4.2	1.37 + 1.37 + 1.37 + 2.67 + 3.21 2.90 ~ 12.50	10.00	3680 (600-4000)	16.90 - 16.16 - 15.49	2.72	1.76 ~ 1.76 + 1.76 + 3.04 + 3.67 3.40 ~ 12.70	12.00	3480 (610-4000)	15.98 - 15.28 - 14.65	3.45
13.9	1.8 + 1.8 + 1.8 + 3.5 + 5.0	1.29 + 1.29 + 1.29 + 2.52 + 3.60 2.90 ~ 12.50	10.00	4000 (600-4500)	18.37 - 17.57 - 16.84	2.50	1.64 ~ 1.64 + 1.64 + 2.82 + 4.26 3.40 ~ 12.70	12.00	4200 (610-5000)	19.28 - 18.45 - 17.68	2.86
14.9	1.8 + 1.8 + 1.8 + 3.5 + 6.0	1.21 + 1.21 + 1.21 + 2.35 + 4.03 2.90 ~ 12.50	10.00	4000 (600-4500)	18.37 - 17.57 - 16.84	2.50	1.55 ~ 1.55 + 1.55 + 2.67 + 4.66 3.40 ~ 12.70	12.00	4200 (610-5000)	19.28 - 18.45 - 17.68	2.86
13.8	1.8 + 1.8 + 1.8 + 4.2 + 4.2	1.30 + 1.30 + 1.30 + 3.04 + 3.04 2.90 ~ 12.50	10.00	3680 (600-4000)	16.90 - 16.16 - 15.49	2.72	1.68 ~ 1.68 + 1.68 + 3.49 + 3.49 3.40 ~ 12.70	12.00	3680 (610-5000)	16.90 - 16.16 - 15.49	3.26
14.6	1.8 + 1.8 + 1.8 + 4.2 + 5.0	1.23 + 1.23 + 1.23 + 2.88 + 3.42 2.90 ~ 12.50	10.00	4000 (600-4500)	18.37 - 17.57 - 16.84	2.50	1.56 ~ 1.56 + 1.56 + 3.25 + 4.06 3.40 ~ 12.70	12.00	4300 (610-5000)	19.74 - 18.88 - 18.10	2.79
15.6	1.8 + 1.8 + 1.8 + 4.2 + 6.0	1.15 + 1.15 + 1.15 + 2.69 + 3.85 2.90 ~ 12.50	10.00	4000 (600-4500)	18.37 - 17.57 - 16.84	2.50	1.49 ~ 1.49 + 1.49 + 3.09 + 4.46 3.40 ~ 12.70	12.00	4300 (610-5000)	19.74 - 18.88 - 18.10	2.79
15.4	1.8 + 1.8 + 1.8 + 5.0 + 5.0	1.17 + 1.17 + 1.17 + 3.25 + 3.25 2.90 ~ 12.50	10.00	4000 (600-4500)	18.37 - 17.57 - 16.84	2.50	1.46 ~ 1.46 + 1.46 + 3.80 + 3.80 3.40 ~ 12.70	12.00	4400 (610-5000)	20.20 - 19.32 - 18.52	2.73
16.4	1.8 + 1.8 + 1.8 + 5.0 + 6.0	1.10 + 1.10 + 1.10 + 3.05 + 3.66 2.90 ~ 12.50	10.00	4000 (600-4500)	18.37 - 17.57 - 16.84	2.50	1.40 ~ 1.40 + 1.40 + 3.63 + 4.19 3.40 ~ 12.70	12.00	4400 (610-5000)	20.20 - 19.32 - 18.52	2.73
11.1	1.8 + 1.8 + 2.5 + 2.5 + 2.5	1.62 + 1.62 + 2.25 + 2.25 + 2.25 2.90 ~ 11.17	10.00	3000 (600-3600)	13.77 - 13.18 - 12.63	3.33	1.97 ~ 1.97 + 2.68 + 2.68 + 2.68 3.40 ~ 12.70	12.00	2980 (610-4000)	13.68 - 13.09 - 12.54	4.03
12.1	1.8 + 1.8 + 2.5 + 2.5 + 3.5	1.49 + 1.49 + 2.07 + 2.07 + 2.89 2.90 ~ 12.50	10.00	3000 (600-3600)	13.77 - 13.18 - 12.63	3.33	1.86 ~ 1.86 + 2.53 + 2.53 + 3.20 3.40 ~ 12.70	12.00	3130 (610-4000)	14.37 - 13.75 - 13.17	3.83
12.8	1.8 + 1.8 + 2.5 + 2.5 + 4.2	1.41 + 1.41 + 1.95 + 1.95 + 3.28 2.90 ~ 12.50	10.00	3260 (600-3600)	14.97 - 14.32 - 13.72	3.07	1.76 ~ 1.76 + 1.76 + 2.40 + 3.67 3.40 ~ 12.70	12.00	3450 (610-4000)	15.84 - 15.15 - 14.52	3.48
13.6	1.8 + 1.8 + 2.5 + 2.5 + 5.0	1.32 + 1.32 + 1.84 + 1.84 + 3.68 2.90 ~ 12.50	10.00	4000 (600-4500)	18.37 - 17.57 - 16.84	2.50	1.54 ~ 1.64 + 2.23 + 2.23 + 4.26 3.40 ~ 12.70	12.00	4100 (610-5000)	18.82 - 18.01 - 17.26	2.93
14.6	1.8 + 1.8 + 2.5 + 2.5 + 6.0	1.23 + 1.23 + 1.71 + 1.71 + 4.11 2.90 ~ 12.50	10.00	4000 (600-4500)	18.37 - 17.57 - 16.84	2.50	1.55 ~ 1.55 + 2.11 + 2.11 + 4.66 3.40 ~ 12.70	12.00	4100 (610-5000)	18.82 - 18.01 - 17.26	2.93
13.1	1.8 + 1.8 + 2.5 + 3.5 + 3.5	1.37 + 1.37 + 1.91 + 2.67 + 2.67 2.90 ~ 12.50	10.00	3680 (600-4000)	16.90 - 16.16 - 15.49	2.72	1.76 ~ 1.76 + 2.40 + 3.04 + 3.04 3.40 ~ 12.70	12.00	3130 (610-4000)	14.37 - 13.75 - 13.17	3.83
13.8	1.8 + 1.8 + 2.5 + 3.5 + 4.2	1.30 + 1.30 + 1.81 + 2.54 + 3.04 2.90 ~ 12.50	10.00	3680 (600-4000)	16.90 - 16.16 - 15.49	2.72	1.68 ~ 1.68 + 2.28 + 2.88 + 3.49 3.40 ~ 12.70	12.00	3580 (610-4000)	16.44 - 15.72 - 15.07	3.35
14.6	1.8 + 1.8 + 2.5 + 3.5 + 5.0	1.23 + 1.23 + 1.71 + 2.40 + 3.42 2.90 ~ 12.50	10.00	4000 (600-4500)	18.37 - 17.57 - 16.84	2.50	1.56 ~ 1.56 + 2.13 + 2.69 + 4.06 3.40 ~ 12.70	12.00	4300 (610-5000)	19.74 - 18.88 - 18.10	2.79
15.6	1.8 + 1.8 + 2.5 + 3.5 + 6.0	1.15 + 1.15 + 1.60 + 2.24 + 3.85 2.90 ~ 12.50	10.00	4000 (600-4500)	18.37 - 17.57 - 16.84	2.50	1.49 ~ 1.49 + 2.02 + 2.55 + 4.46 3.40 ~ 12.70	12.00	4300 (610-5000)	19.74 - 18.88 - 18.10	2.79
14.5	1.8 + 1.8 + 2.5 + 4.2 + 4.2	1.24 + 1.24 + 1.72 + 2.90 + 2.90 2.90 ~ 12.50	10.00	4000 (600-4500)	18.37 - 17.57 - 16.84	2.50	1.60 ~ 1.60 + 2.17 + 3.32 + 3.32 3.40 ~ 12.70	12.00	4300 (610-5000)	19.74 - 18.88 - 18.10	2.79
15.3	1.8 + 1.8 + 2.5 + 4.2 + 5.0	1.18 + 1.18 + 1.63 + 2.75 + 3.27 2.90 ~ 12.50	10.00	4000 (600-4500)	18.37 - 17.57 - 16.84	2.50	1.49 ~ 1.49 + 2.03 + 3.10 + 3.88 3.40 ~ 12.70	12.00	4400 (610-5000)	20.20 - 19.32 - 18.52	2.73
16.3	1.8 + 1.8 + 2.5 + 4.2 + 6.0	1.10 + 1.10 + 1.53 + 2.58 + 3.68 2.90 ~ 12.50	10.00	4000 (600-4500)	18.37 - 17.57 - 16.84	2.50	1.42 ~ 1.42 + 1.93 + 2.96 + 4.27 3.40 ~ 12.70	12.00	4400 (610-5000)	20.20 - 19.32 - 18.52	2.73
16.1	1.8 + 1.8 + 2.5 + 5.0 + 5.0	1.12 + 1.12 + 1.55 + 3.11 + 3.11 2.90 ~ 12.50	10.00	4000 (600-4500)	18.37 - 17.57 - 16.84	2.50	1.40 ~ 1.40 + 1.91 + 3.64 + 3.64 3.40 ~ 12.70	12.00	4500 (610-5000)	20.66 - 19.76 - 18.94	2.67
14.1	1.8 + 1.8 + 3.5 + 3.5 + 3.5	1.28 + 1.28 + 2.48 + 2.48 + 2.48 2.90 ~ 12.50	10.00	4000 (600-4500)	18.37 - 17.57 - 16.84	2.50	1.68 ~ 1.68 + 2.88 + 2.88 + 2.88 3.40 ~ 12.70	12.00	3280 (610-4000)	15.06 - 14.40 - 13.80	3.66
14.8	1.8 + 1.8 + 3.5 + 3.5 + 4.2	1.22 + 1.22 + 2.36 + 2.36 + 2.84 2.90 ~ 12.50	10.00	4000 (600-4500)	18.37 - 17.57 - 16.84	2.50	1.60 ~ 1.60 + 2.74 + 2.74 + 3.32 3.40 ~ 12.70	12.00	3580 (610-4000)	16.44 - 15.72 - 15.07	3.35
15.6	1.8 + 1.8 + 3.5 + 3.5 + 5.0	1.15 + 1.15 + 2.24 + 2.24 + 3.21 2.90 ~ 12.50	10.00	4000 (600-4500)	18.37 - 17.57 - 16.84	2.50	1.49 ~ 1.49 + 2.57 + 2.57 + 3.88 3.40 ~ 12.70	12.00	4200 (610-5000)	19.28 - 18.45 - 17.68	2.86
16.6	1.8 + 1.8 + 3.5 + 3.5 + 6.0	1.08 + 1.08 + 2.11 + 2.11 + 3.61 2.90 ~ 12.50	10.00	4000 (600-4500)	18.37 - 17.57 - 16.84	2.50	1.42 ~ 1.42 + 2.45 + 2.45 + 4.27 3.40 ~ 12.70	12.00	4200 (610-5000)	19.28 - 18.45 - 17.68	2.86
15.5	1.8 + 1.8 + 3.5 + 4.2 + 4.2	1.16 + 1.16 + 2.26 + 2.71 + 2.71 2.90 ~ 12.50	10.00	4000 (600-4500)	18.37 - 17.57 - 16.84	2.50	1.52 ~ 1.52 + 2.62 + 3.17 + 3.17 3.40 ~ 12.70	12.00	4200 (610-5000)	19.28 - 18.45 - 17.68	2.86
16.3	1.8 + 1.8 + 3.5 + 4.2 + 5.0	1.10 + 1.10 + 2.15 + 2.58 + 3.07 2.90 ~ 12.50	10.00	4000 (600-4500)	18.37 - 17.57 - 16.84	2.50	1.43 ~ 1.43 + 2.46 + 2.97 + 3.71 3.40 ~ 12.70	12.00	4300 (610-5000)	19.74 - 18.88 - 18.10	2.79
11.8	1.8 + 2.5 + 2.

| | | |

Indoor unit model	Nominal cooling capacity (kW)	Capacity (kW) at single unit operation		Suitable room size (m^2) At single unit operation	
		Cooling	Heating	Cooling	Heating
RAK-18QXE	1.8	1.50-2.00	1.80-3.50	8-12	9-11
RAK-25RXE	2.5	1.50-2.80	1.80-4.70	11-17	14-18
RAK-35RXE	3.5	1.50-3.90	1.80-5.80	16-24	17-22
RAK-50RXE	5.0	1.50-5.60	1.80-7.20	23-24	23-29
RAK-15QPE	1.5	1.00-1.60	1.10-2.20	8-12	9-11
RAK-18RPE	1.8	1.50-2.00	1.80-3.50	8-12	9-11
RAK-25RPE	2.5	1.50-2.80	1.80-4.70	11-17	14-18
RAK-35RPE	3.5	1.50-3.90	1.80-5.80	16-24	17-22
RAK-42RPE	4.2	1.50-5.60	1.80-7.20	23-24	23-29
RAK-50RPE	5.0	1.50-5.60	1.80-7.20	23-24	23-29
RAK-50RPE1	5.0	1.50-5.60	1.80-7.20	23-24	23-29
RAK-60RPE	6.0	1.50-5.60	1.80-7.20	23-24	23-29
RAF-25RXE	2.5	1.50-2.80	1.80-4.70	11-17	14-18
RAF-35RXE	3.5	1.50-3.90	1.80-5.80	16-24	17-22
RAF-50RXE	5.0	1.50-5.60	1.80-7.20	23-24	23-29
RAI-25RPE	2.5	1.50-2.80	1.80-4.70	11-17	14-18
RAI-35RPE	3.5	1.50-3.90	1.80-5.80	16-24	17-22
RAI-50RPE	5.0	1.50-5.60	1.80-7.20	23-24	23-29
RAI-60RPE	6.0	1.50-5.60	1.80-7.20	23-24	23-29
RAD-18QPE	1.8	1.50-2.00	1.80-3.50	8-12	9-11
RAD-25RPE	2.5	1.50-2.80	1.80-4.70	11-17	14-18
RAD-35RPE	3.5	1.50-3.90	1.80-5.80	16-24	17-22
RAD-50RPE	5.0	1.50-5.60	1.80-7.20	23-24	23-29
RAD-60RPE	6.0	1.50-5.60	1.80-7.20	23-24	23-29

*Two, three, four or five indoor units can be installed with one outdoor unit.
*One-unit values are for one unit operation with two indoors connected.
*Total nominal cooling capacity should not be more than 16.6kW.

4 SOUND DATA

CONTENTS

4 SOUND DATA 4-1
4.1. SOUND DATA 4-2
4.1.1. RAM-110NP5E 4-2

4.1.1. **RAM-110NP5E**

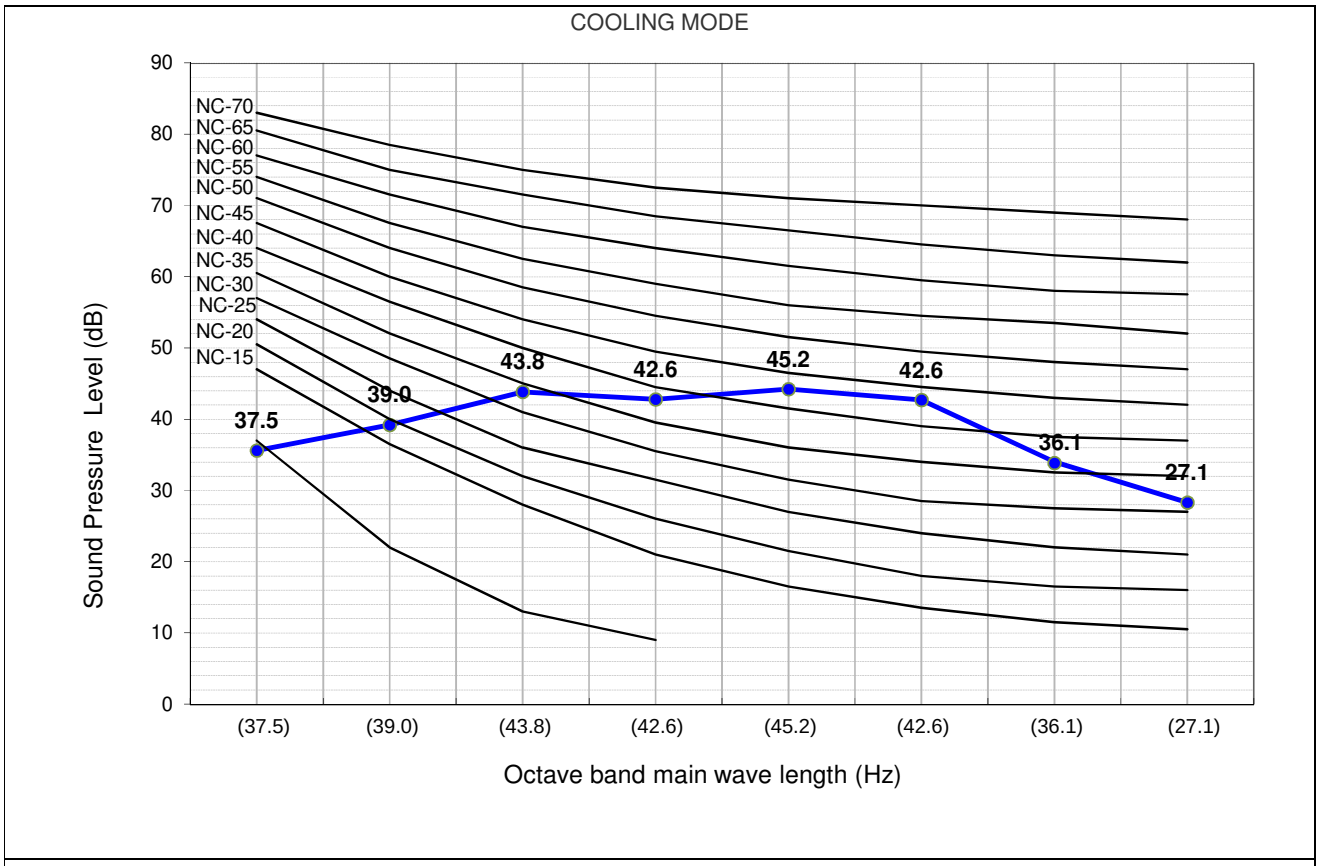

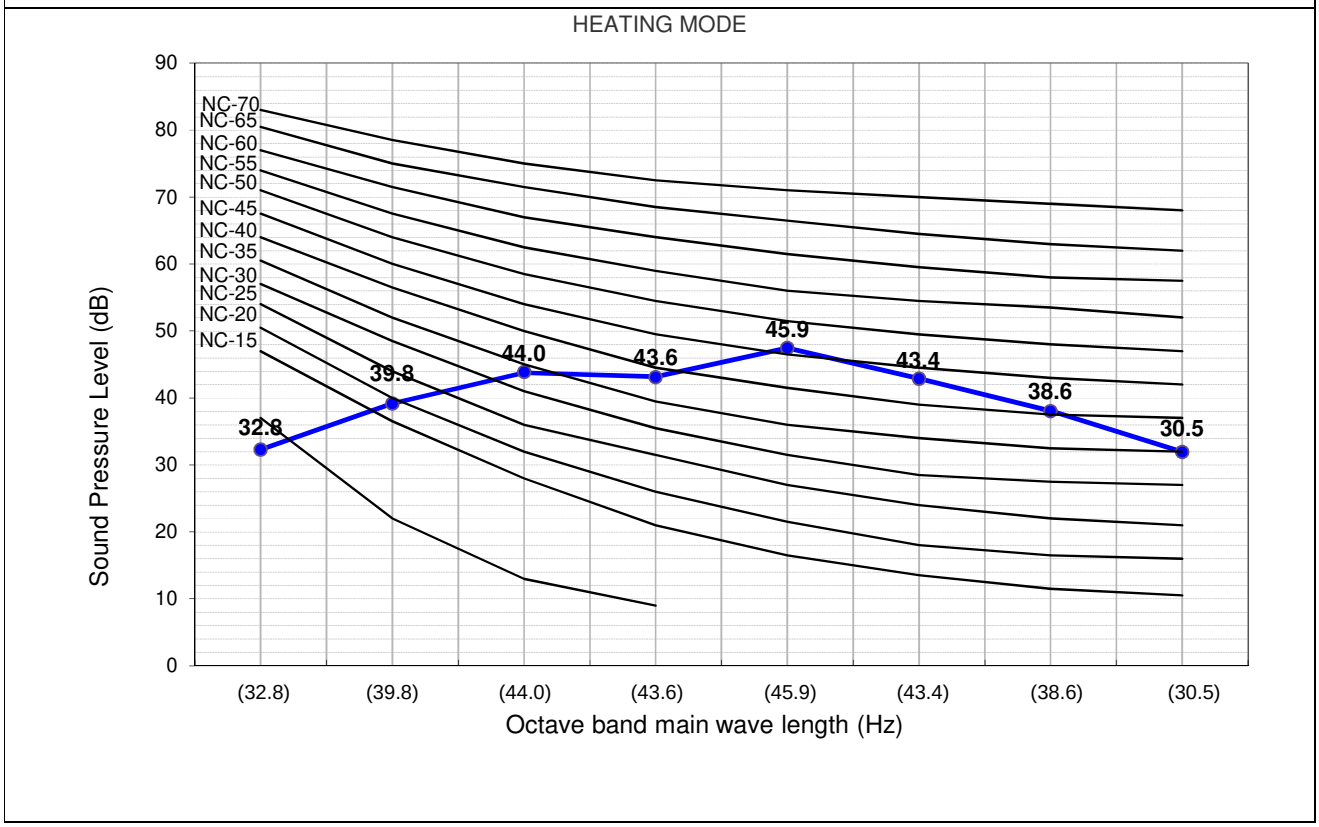

The Sound Pressure Level is based on the following conditions:

1 meter from the unit front surface and 1 meter from floor level

The above data was measured in an anechoic chamber. Please take into consideration reflected sound of your specific site

5 WORKING RANGE

CONTENTS

5 WORKING RANGE 5-1
5.1. POWER SUPPLY 5-2
5.2. WORKING RANGE 5-2
5.2.1. MULTIZONE 5-2

5.1. POWER SUPPLY

Working Voltage	198V ~ 253V
Voltage Imbalance	Within a 3% Deviation from Each Voltage at the Main Terminal of Outdoor Unit
Starting Voltage	Higher than 85% of the Rated Voltage

5.2. WORKING RANGE

5.2.1. MULTIZONE

Applicable models:

MULTIZONE
RAM-110NP5E

The temperature range is indicated in the following table.

Cooling

working range	min (ºC)	max (ºC)	rated (ºC)
outdoor	-10	46	35
indoor	16	32	27

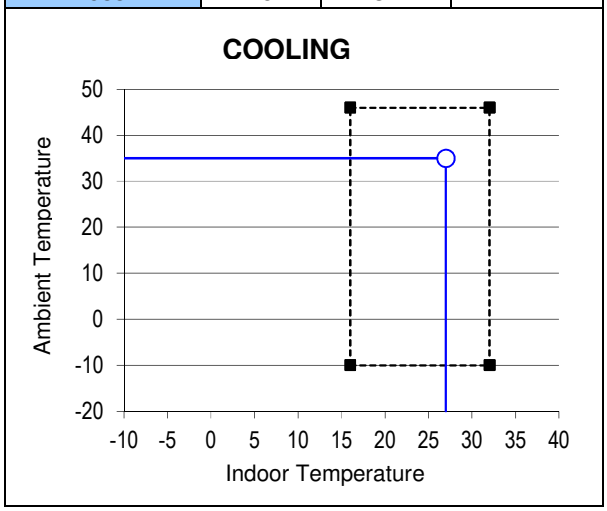

Heating

working range	min (ºC)	max (ºC)	rated (ºC)
outdoor	-15	24	7
indoor	16	27	20

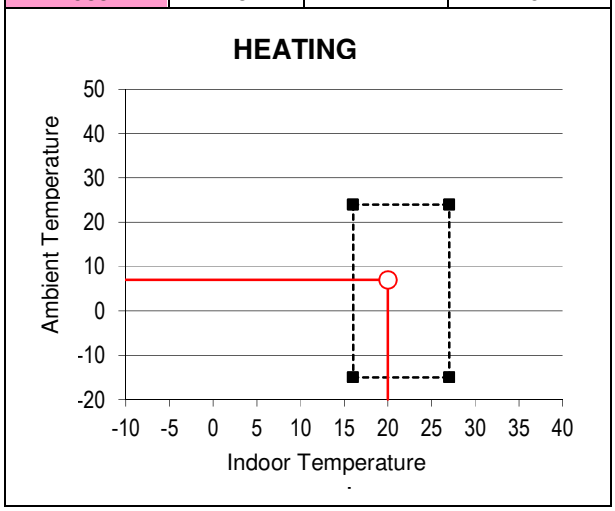

6 ELECTRICAL DATA

CONTENTS

6 ELECTRICAL DATA 6-1
6.1. INDOOR UNIT 6-2
6.2. OUTDOOR UNIT 6-3

6.1. INDOOR UNIT

Model	Unit Main Power		Applicable Current		Indoor Fan Motor	
	VOL, PH, Hz	Fuse Rating (A)	STC	RNC	RNC	IPT
RAK-18QXE	230, 1, 50	3.15	-	-	0.67	30
RAK-25RXE	230, 1, 50	3.15	(C) 2.92 (H) 2.73	(C) 4.35 (H) 5.22	0.67	30
RAK-35RXE	230, 1, 50	3.15	(C) 3.86 (H) 3.67	(C) 6.09 (H) 6.96	0.67	30
RAK-50RXE	230, 1, 50	3.15	(C) 6.36 (H) 6.44	(C) 9.13 (H) 11.74	0.67	30
RAK-15QPE	230, 1, 50	3.15	-	-	0.67	30
RAK-18RPE	230, 1, 50	3.15	(C) 2.46 (H) 2.93	(C) 4.39 (H) 4.22	0.67	30
RAK-25RPE	230, 1, 50	3.15	(C) 3.08 (H) 3.87	(C) 5.61 (H) 6.52	0.67	30
RAK-35RPE	230, 1, 50	3.15	(C) 4.81 (H) 5.11	(C) 6.35 (H) 7.39	0.67	30
RAK-42RPE	230, 1, 50	3.15	(C) 5.10 (H) 5.99	(C) 7.39 (H) 8.70	0.67	30
RAK-50RPE	230, 1, 50	3.15	(C) 6.69 (H) 7.09	(C) 8.70 (H) 11.96	0.67	30
RAF-25RXE	230, 1, 50	3.15	(C) 2.87 (H) 3.50	(C)5.13 (H)4.87	0.75	38
RAF-35RXE	230, 1, 50	3.15	(C) 4.27 (H) 5.26	(C) 6.0 (H) 5.87	0.75	38
RAF-50RXE	230, 1, 50	3.15	(C) 6.33 (H) 7.19	(C) 9.13 (H) 11.74	0.75	38
RAI-25RPE	230, 1, 50	3.15	-	-	0.25	57
RAI-35RPE	230, 1, 50	3.15	-	-	0.25	57
RAI-50RPE	230, 1, 50	3.15	-	-	0.25	57
RAI-60RPE	230, 1, 50	3.15			0.25	57
RAD-18QPE	230, 1, 50	3.15	-	-	0.11	30
RAD-25RPE	230, 1, 50	3.15	-	-	0.11	30
RAD-35RPE	230, 1, 50	3.15	-	-	0.11	30
RAD-50RPE	230, 1, 50	3.15	-	-	0.75	180
RAD-60RPE	230, 1, 50	3.15	-	-	0.75	180

VOL: Rated Unit Power Supply Voltage (V)
Hz: Frequency (Hz)
STC: Starting Current (A)
RNC: Running Current (A)
PH: Phase (ϕ)
IPT: Input (W)

6.2. OUTDOOR UNIT

Model	Unit Main Power				Compressor Motor					
	VOL, PH, Hz	Fuse Rating (A)	Min (V)	Max (V)	Locked Rotor Ampere (A)	STC	Cooling Operation		Heating Operation	
							RNC	IPT	RNC	IPT
RAM-110NP5E	220 ~ 230, 1, 50/60	25	198	264	N/A	8	10.3	2676	9.9	28.5

VOL: Rated Unit Power Supply Voltage (V)
HZ: Frequency (Hz)
STC: Starting Current (A)
RNC: Running Current (A)
PH: Phase (ϕ)
IPT: Input (W)

NOTE:

1. *The above compressor data is based on 100% capacity combination of indoor units at the rated operating frequency*
2. *This data is based on the same conditions as the nominal heating and cooling capacities.*
3. *The compressor started by an inverter, resulting in extremely low starting current.*

7 WIRING DIAGRAM

CONTENTS

7 WIRING DIAGRAM 7-1
7.1. WIRING DIAGRAM 7-2
7.1.1. RAK-18QXE, RAK-25RXE, RAK-35RXE, RAK-50RXE 7-2
7.1.2. RAK-15QPE, RAK-18RPE, RAK-25RPE, RAK-35RPE, RAK-42RPE, RAK-50RPE 7-3
7.1.3. RAK-50RPE1, RAK-60RPE 7-4
7.1.4. RAF-25RXE, RAF-35RXE, RAF-50RXE 7-5
7.1.5. RAI-25RPE, RAI-35RPE, RAI-50RPE, RAI-60RPE 7-6
7.1.6. RAD-18QPE, RAD-25RPE, RAD-35RPE 7-7
7.1.7. RAD-50RPE, RAD-60RPE 7-8
7.1.8. RAM-110NP5E 7-9

7.1. WIRING DIAGRAM

7.1.1. RAK-18QXE, RAK-25RXE, RAK-35RXE, RAK-50RXE

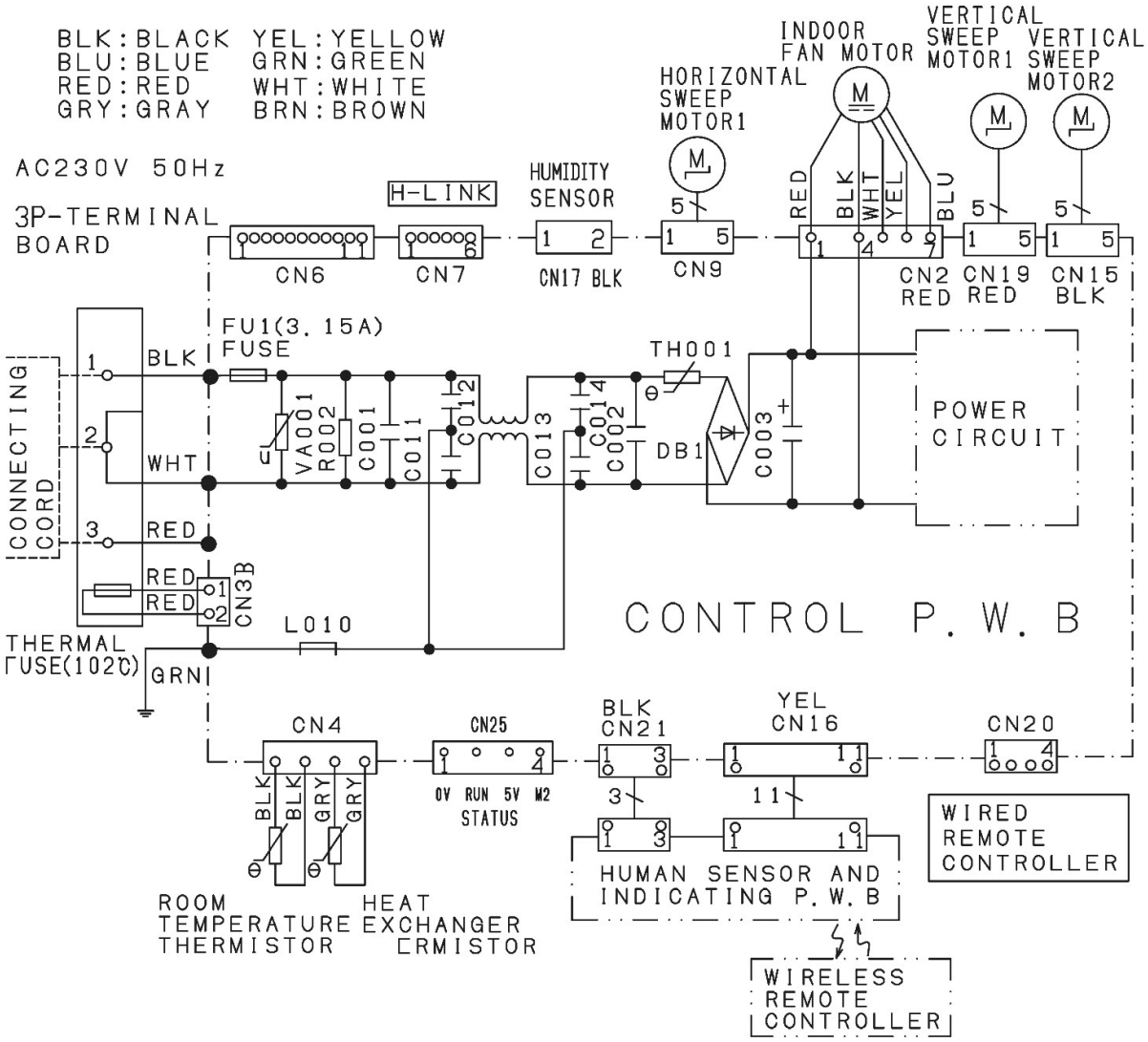

7.1.2. RAK-15QPE, RAK-18RPE, RAK-25RPE, RAK-35RPE, RAK-42RPE, RAK-50RPE

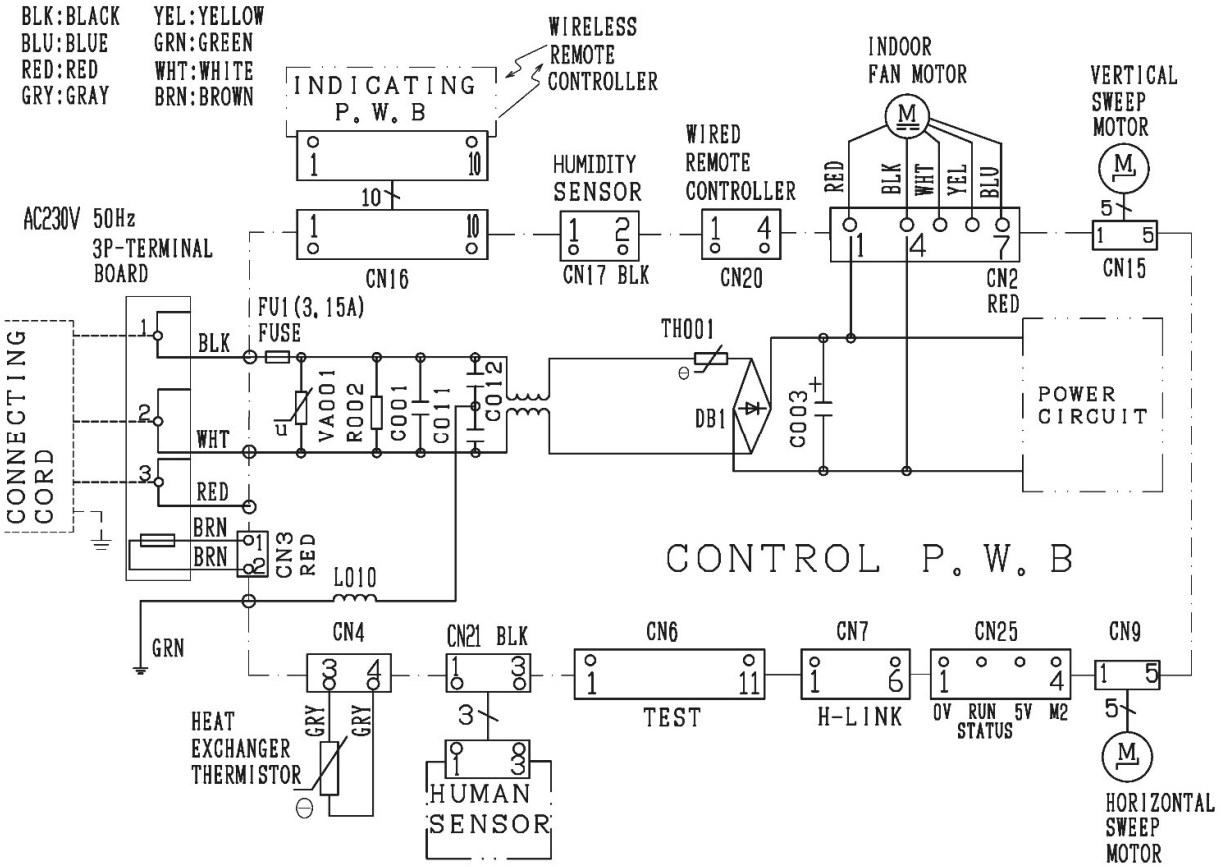

7.1.3. RAK-50RPE1, RAK-60RPE

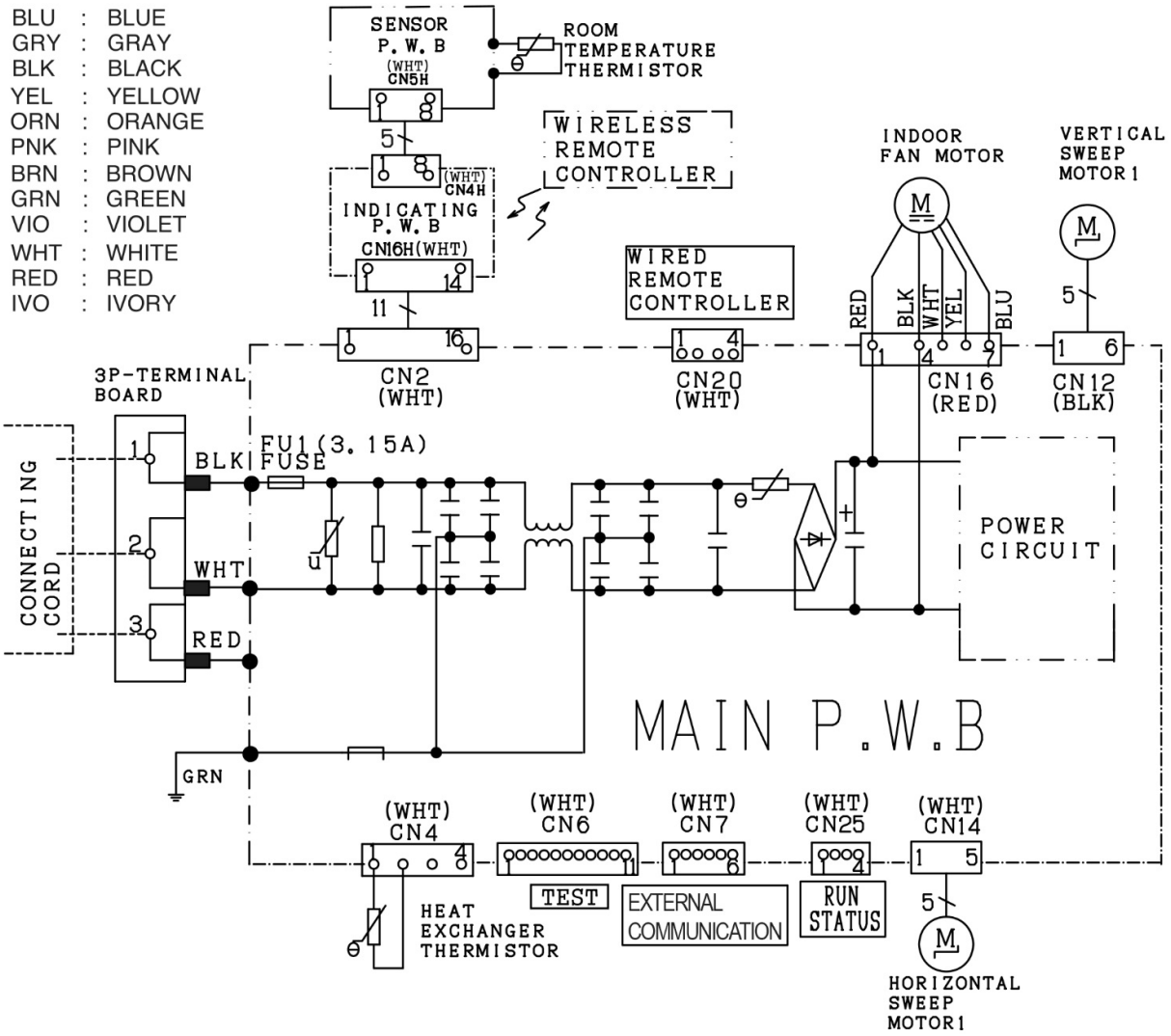

7.1.4. RAF-25RXE, RAF-35RXE, RAF-50RXE

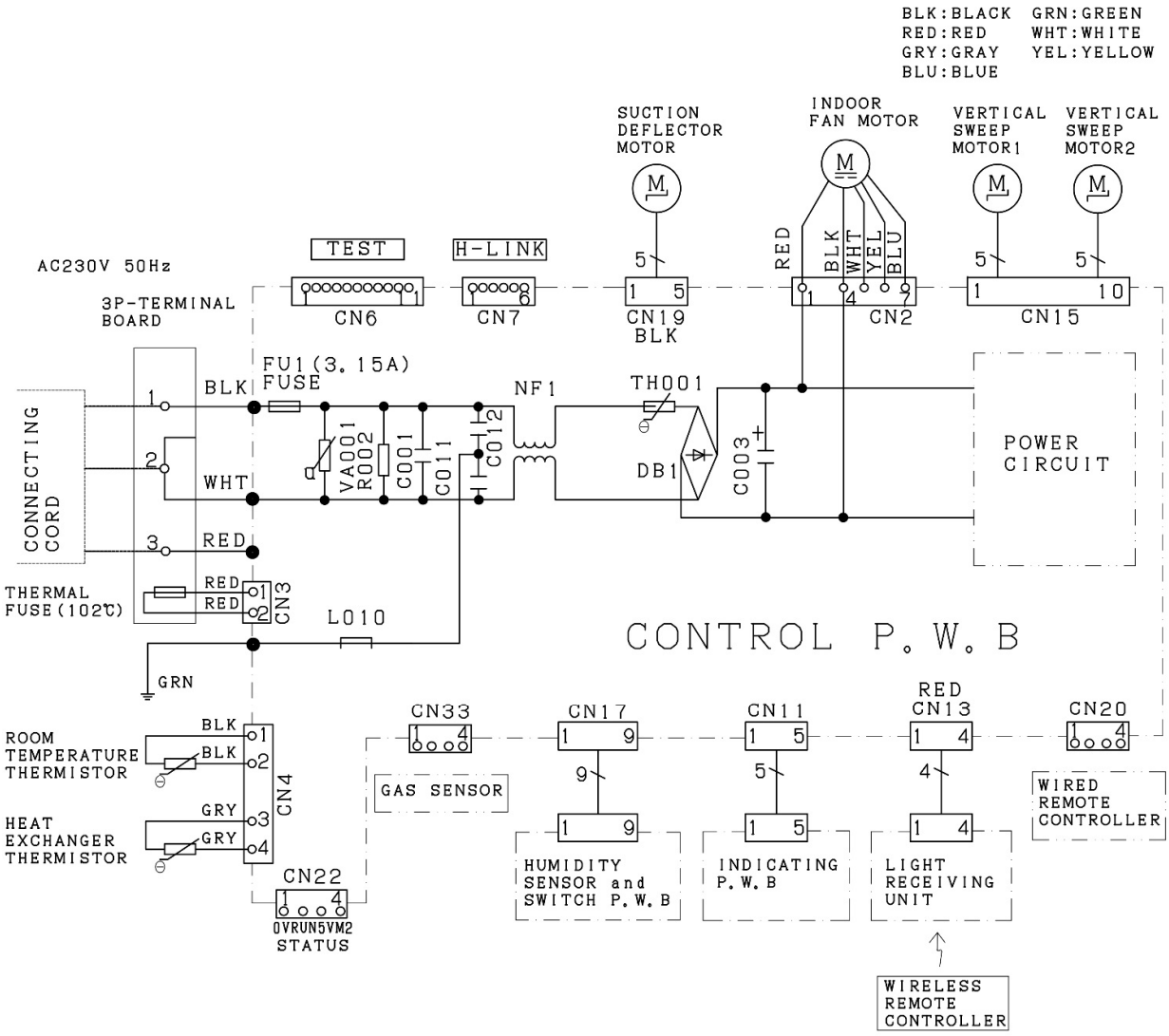

7.1.5. RAI-25RPE, RAI-35RPE, RAI-50RPE, RAI-60RPE

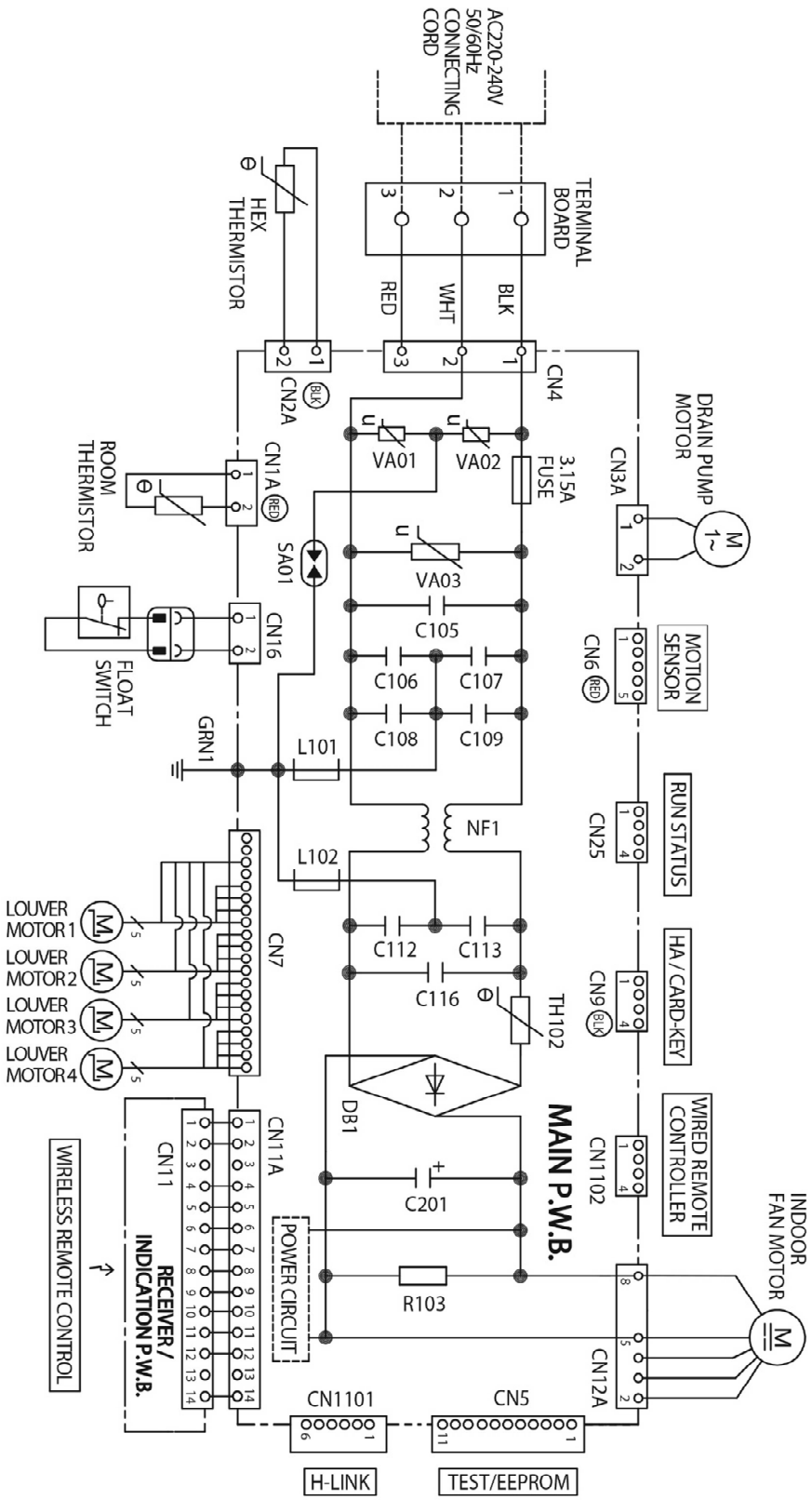

7.1.6. RAD-18QPE, RAD-25RPE, RAD-35RPE

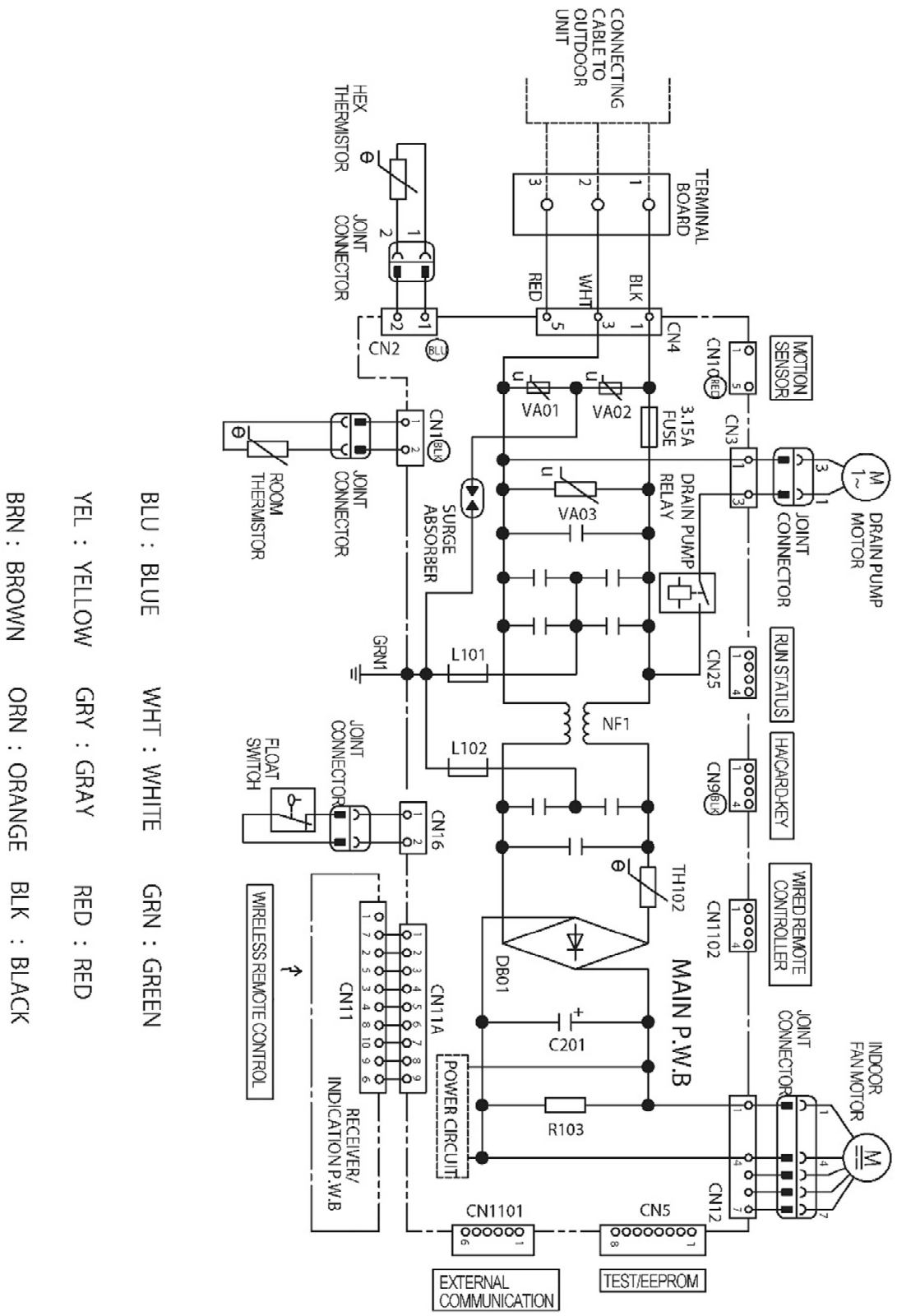

7.1.7. RAD-50RPE, RAD-60RPE

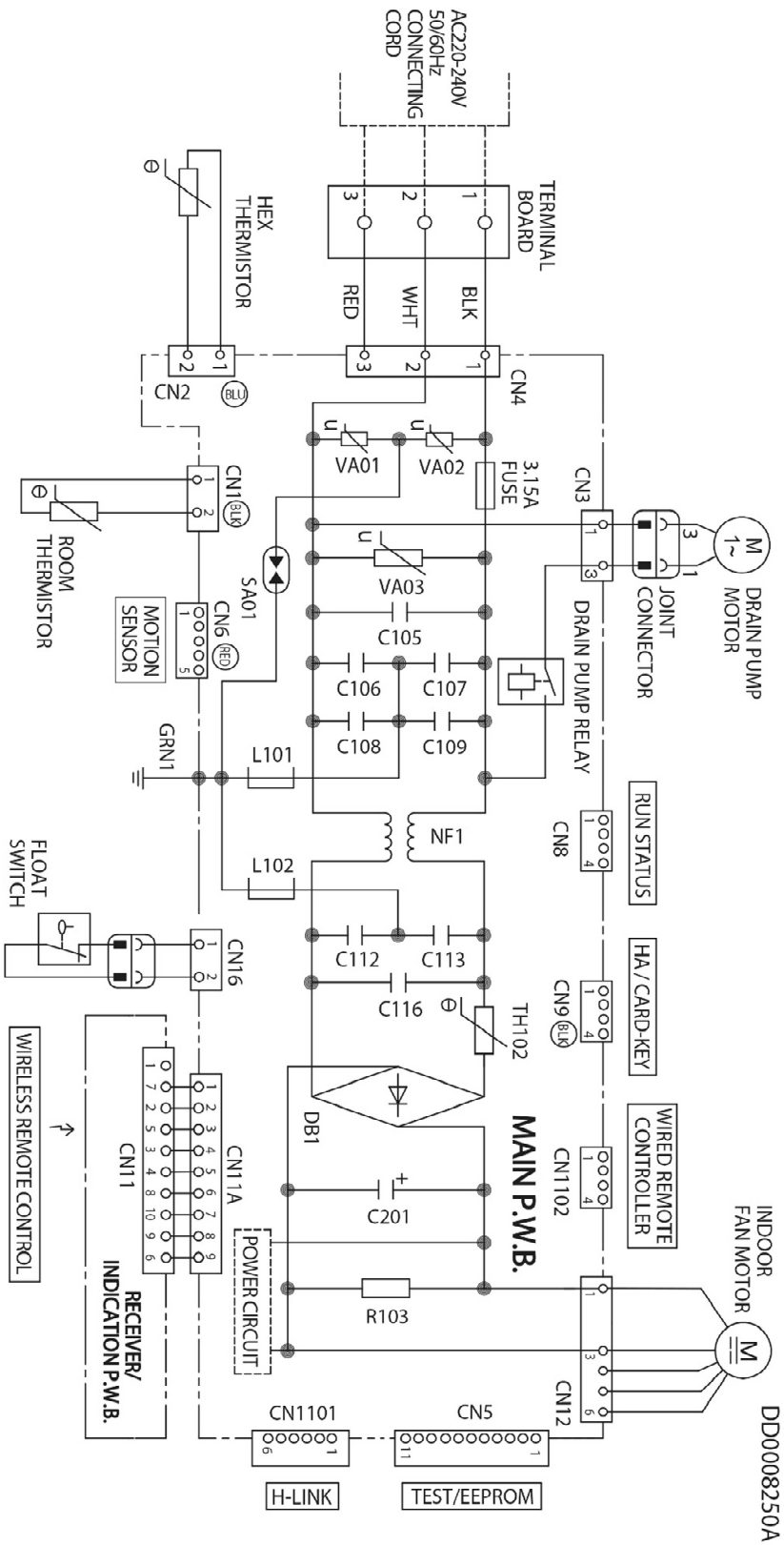

7.1.8. RAM-110NP5E

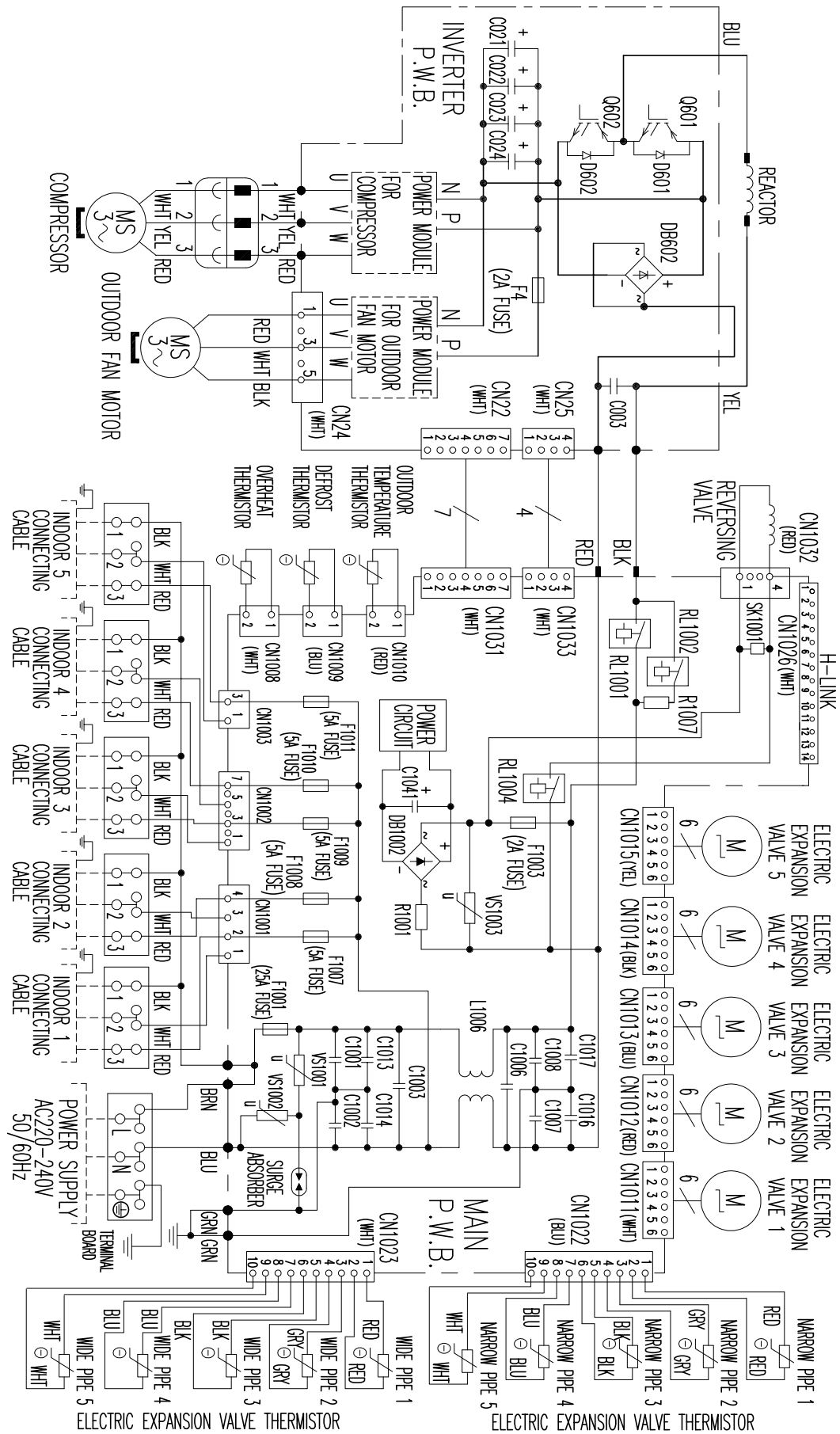

8 REFRIGERANT CYCLE

CONTENT CONTENTS

8 REFRIGERANT CYCLE 8-1
8.1. MULTIZONE INDOOR UNITS 8-2
8.1.1. WALL TYPE: RAK-18QXE, RAK-25RXE, RAK-35RXE 8-2
8.1.2. WALL TYPE: RAK-50RXE 8-3
8.1.3. WALL TYPE: RAK-15QPE, RAK-18RPE, RAK-25RPE, RAK-35RPE, RAK-42RPE, RAK-50RPE 8-4
8.1.4. WALL TYPE: RAK-50RPE1, RAK-60RPE 8-5
8.1.5. FLOOR TYPE: RAF-25RXE, RAF-35RXE 8-6
8.1.6. FLOOR TYPE: RAF-50RXE 8-7
8.1.7. CEILING CASSETTE: RAI-25RPE, RAI-35RPE,RAI-50RPE, RAI-60RPE 8-8
8.1.8. DUCT TYPE: RAD-18QPE, RAD-25RPE, RAD-35RPE 8-9
8.1.9. DUCT TYPE: RAD-50RPE, RAD-60RPE 8-10
8.2. MULTIZONE OUTDOOR UNITS 8-11
8.2.1. 5 ROOMS MULTIZONE: RAM-110NP5E 8-11

8.1. MULTIZONE INDOOR UNITS

8.1.1. WALL TYPE: RAK-18QXE, RAK-25RXE, RAK-35RXE

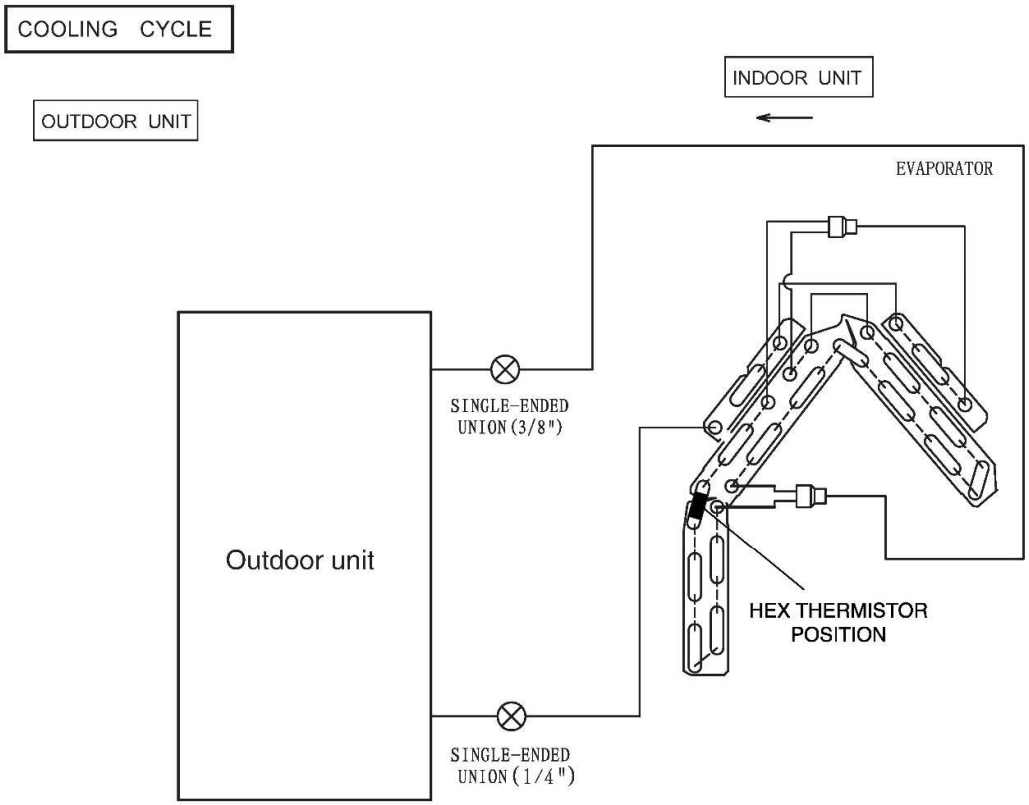

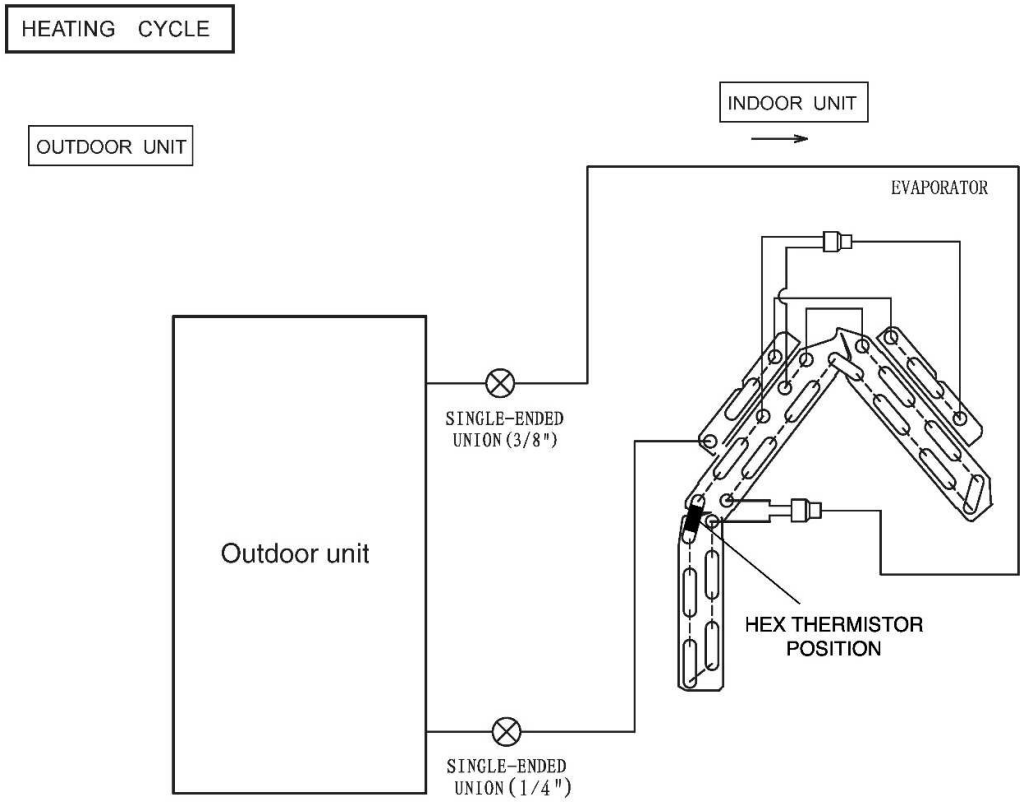

8.1.2. WALL TYPE: RAK-50RXE

COOLING CYCLE

INDOOR UNIT

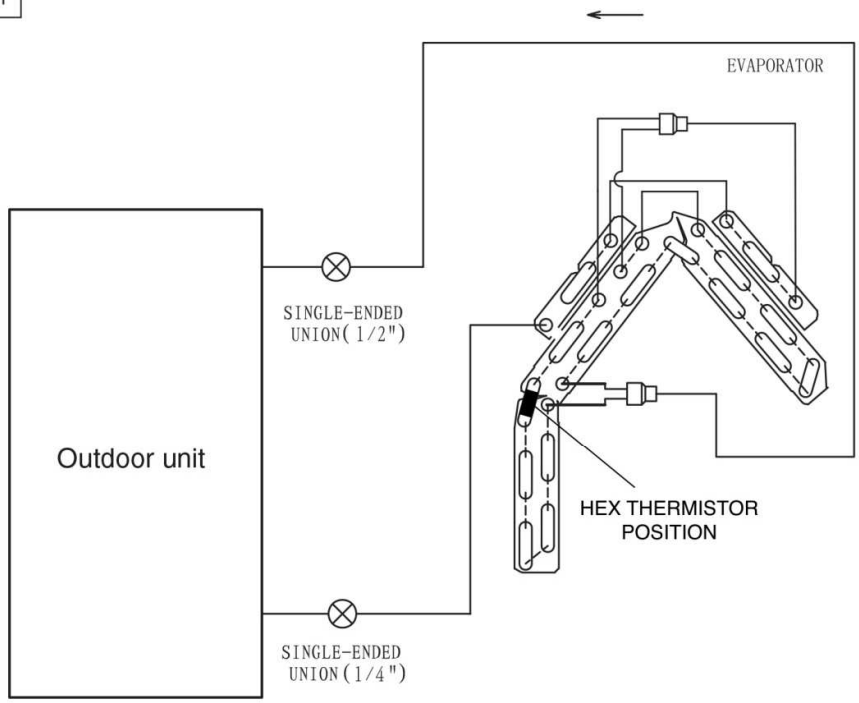

HEATING CYCLE

INDOOR UNIT

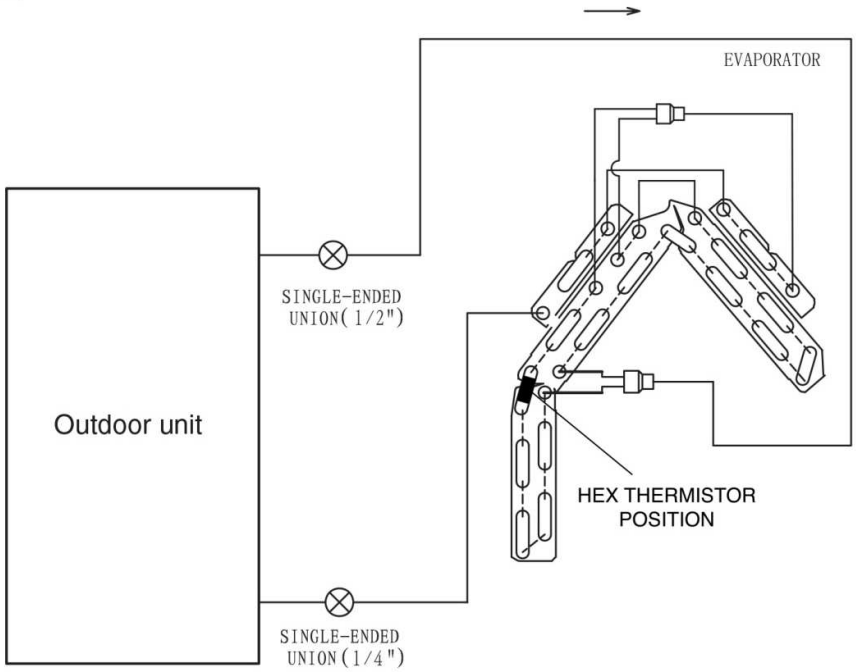

8.1.3. WALL TYPE: RAK-15QPE, RAK-18RPE, RAK-25RPE, RAK-35RPE, RAK-42RPE, RAK-50RPE

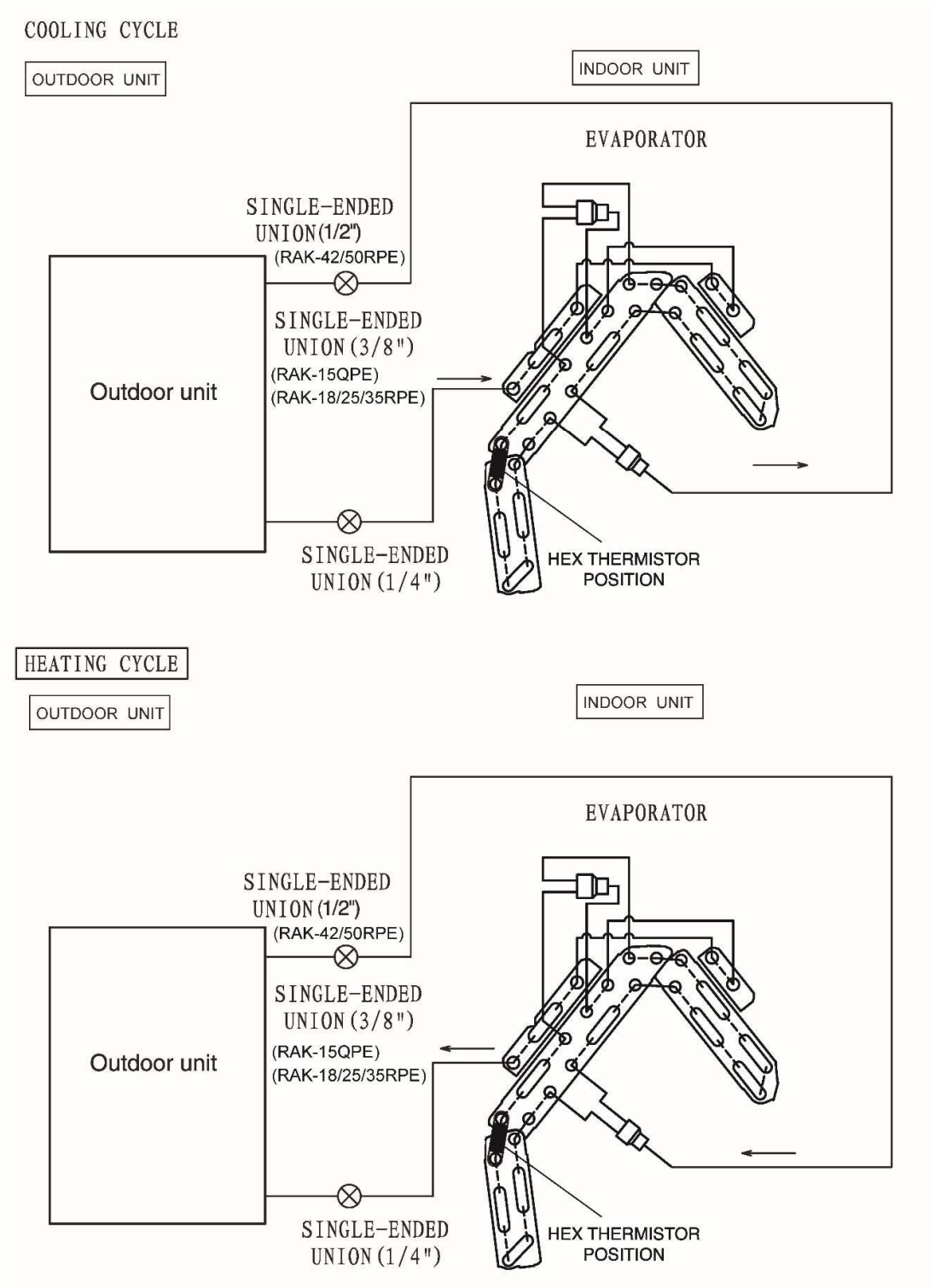

8.1.4. WALL TYPE: RAK-RAK-50RPE1, RAK-60RPE

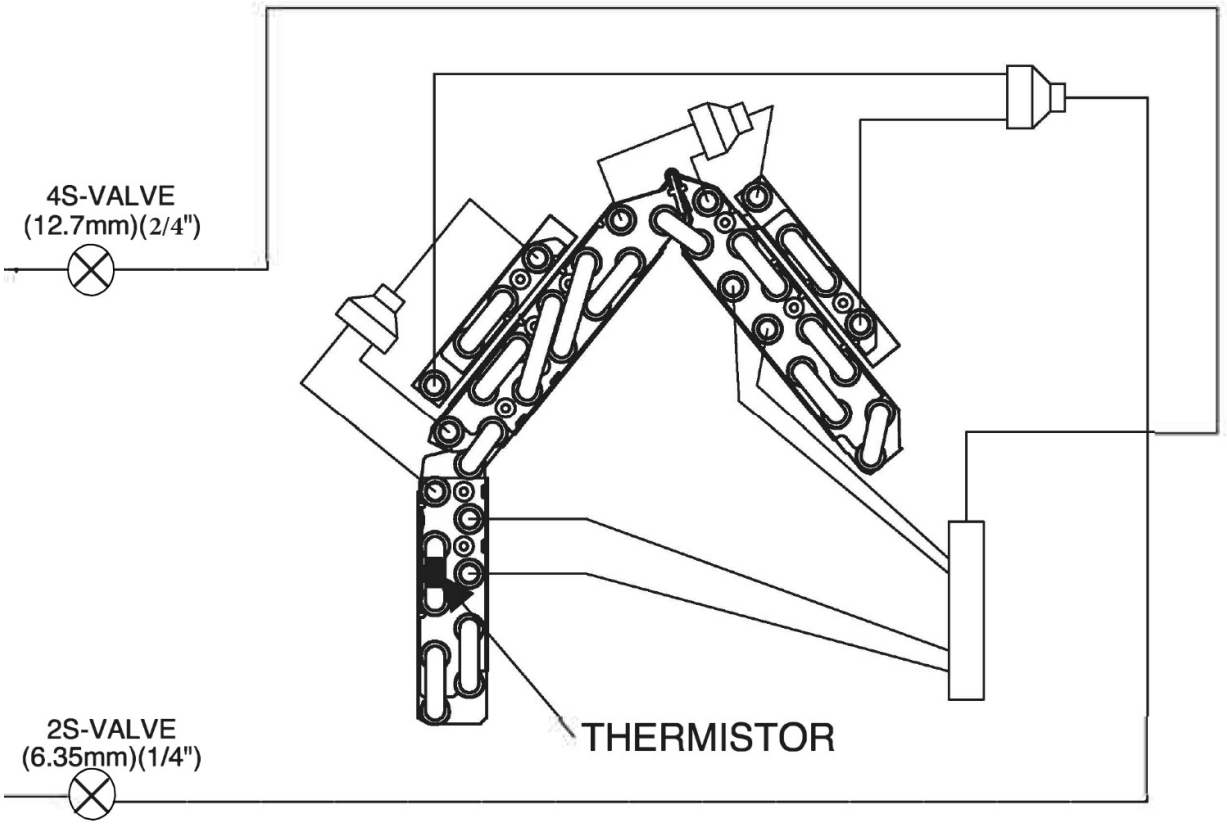

8.1.5. FLOOR TYPE: RAF-25RXE, RAF-35RXE

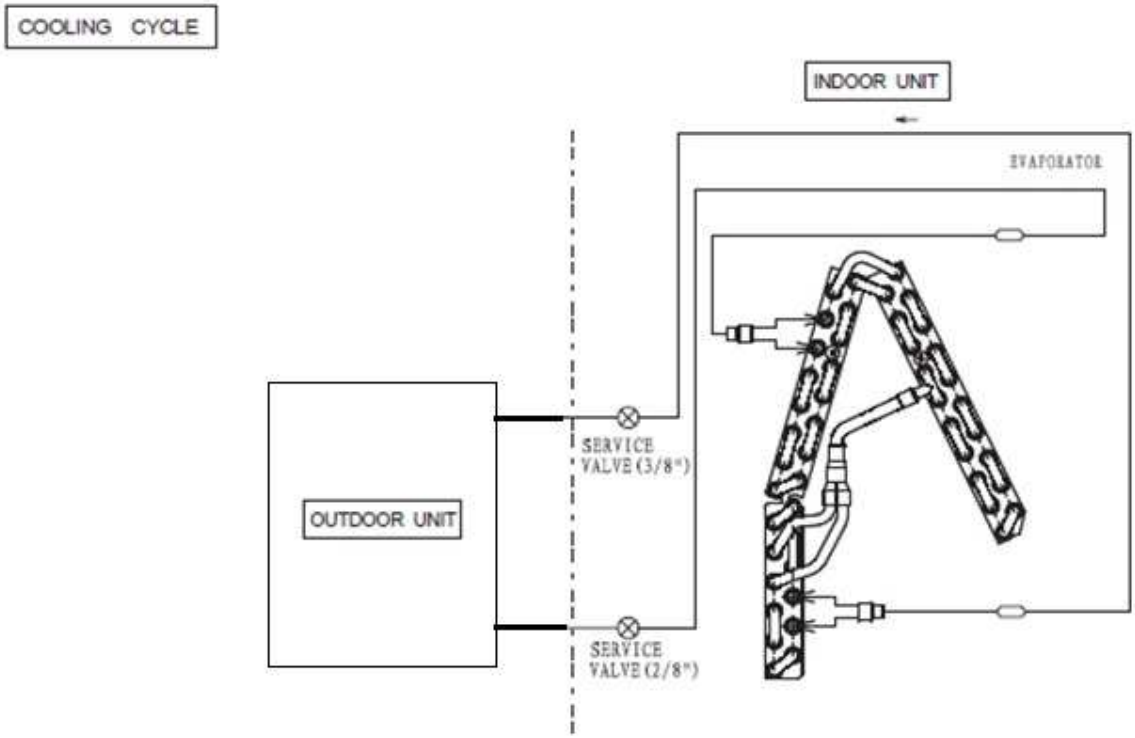

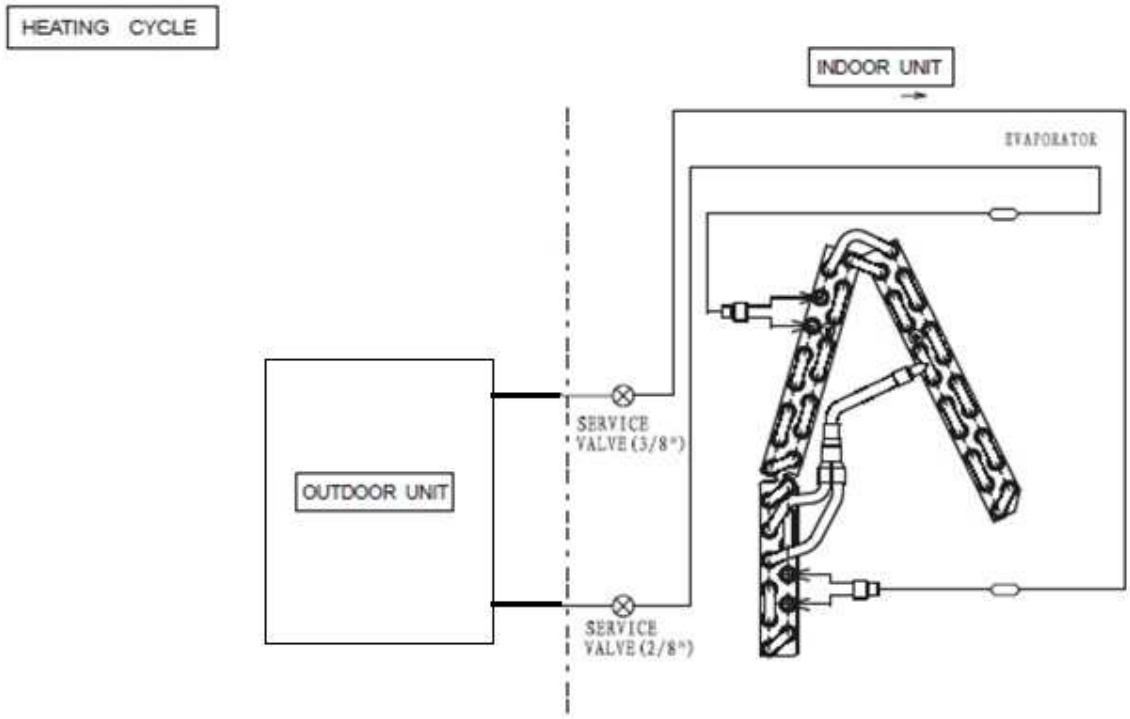

8.1.6. FLOOR TYPE: RAF-50RXE

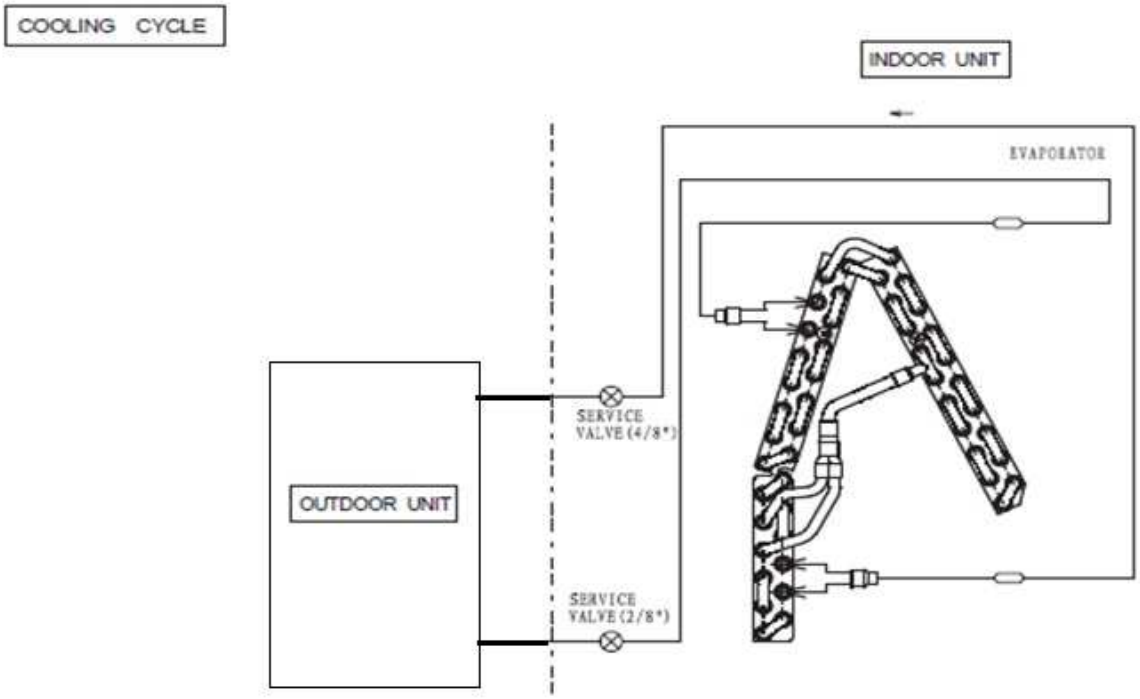

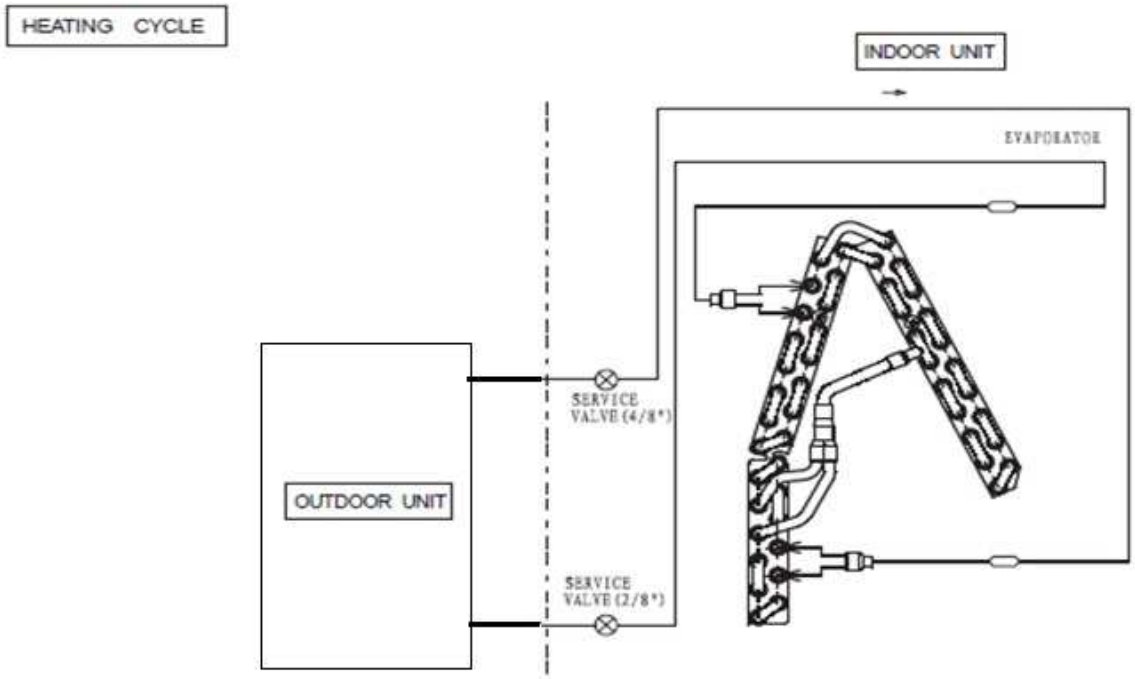

8.1.7. CEILING CASSETTE: RAI-25RPE, RAI-35RPE,RAI-50RPE, RAI-60RPE

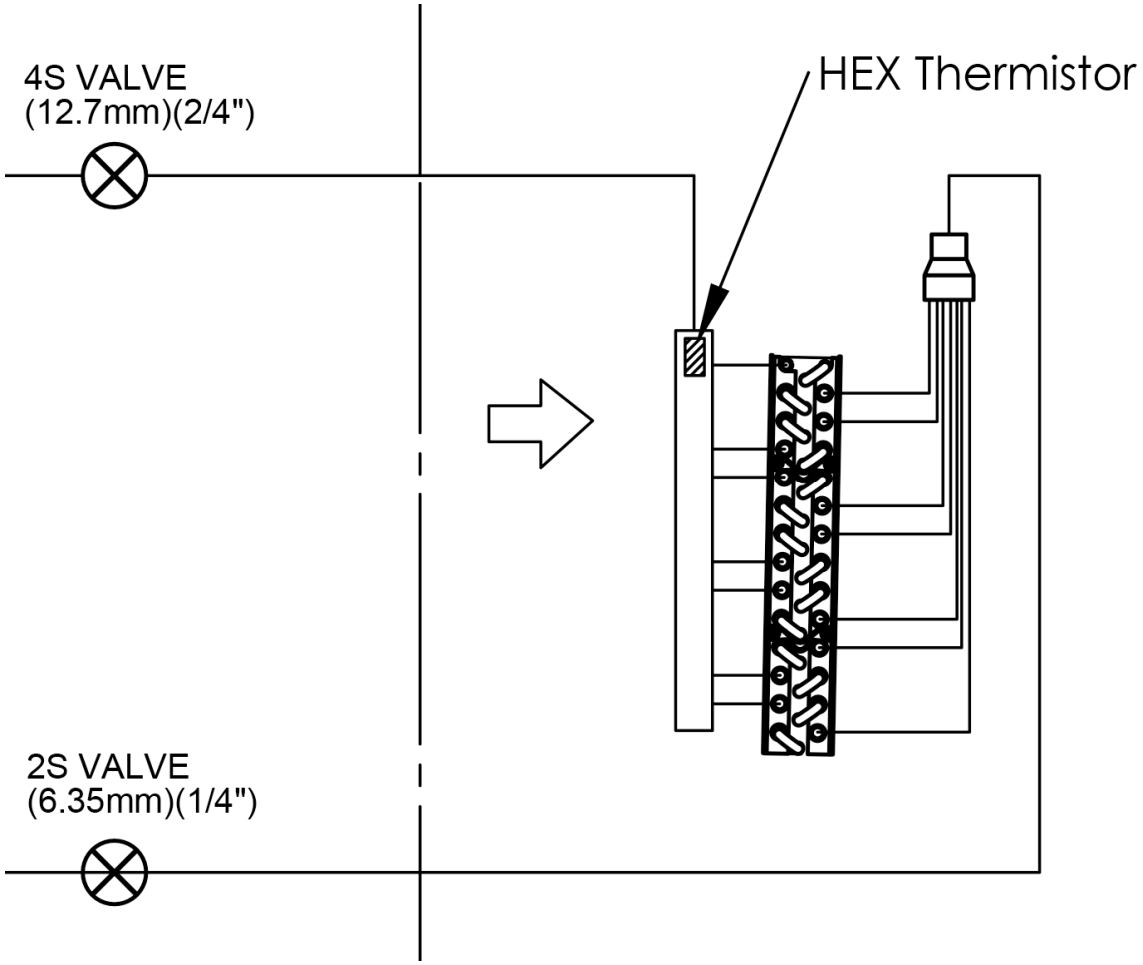

8.1.8. DUCT TYPE: RAD-18QPE, RAD-25RPE, RAD-35RPE

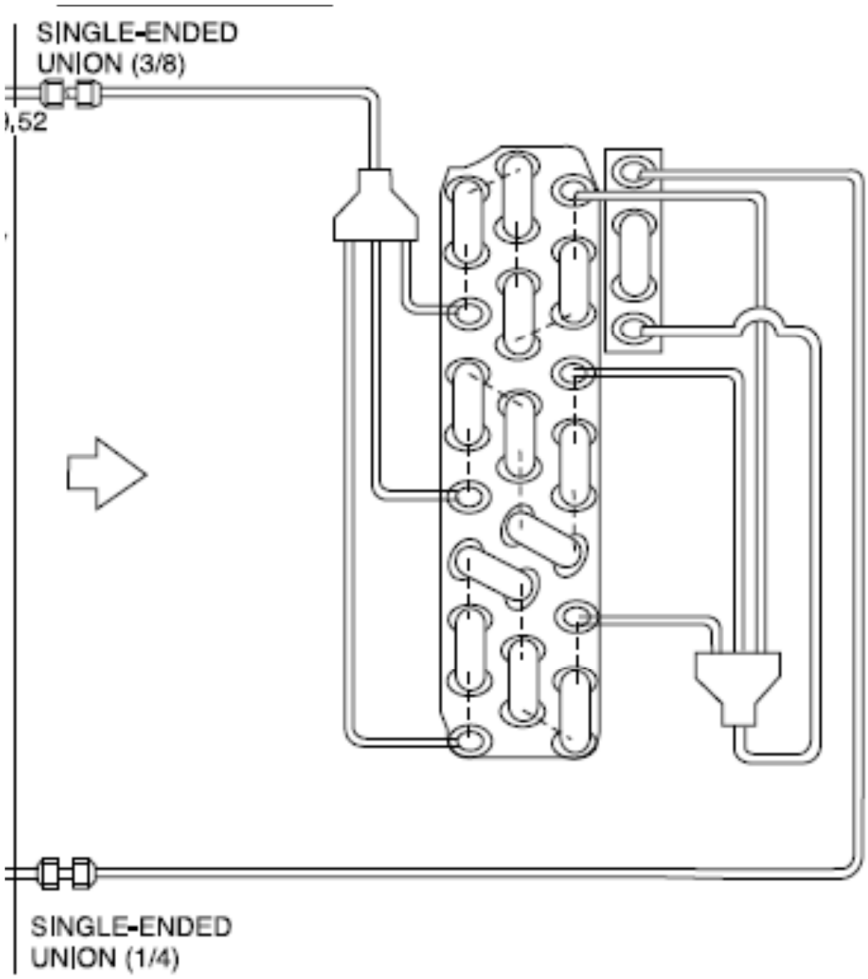

8.1.9. DUCT TYPE: RAD-50RPE, RAD-60RPE

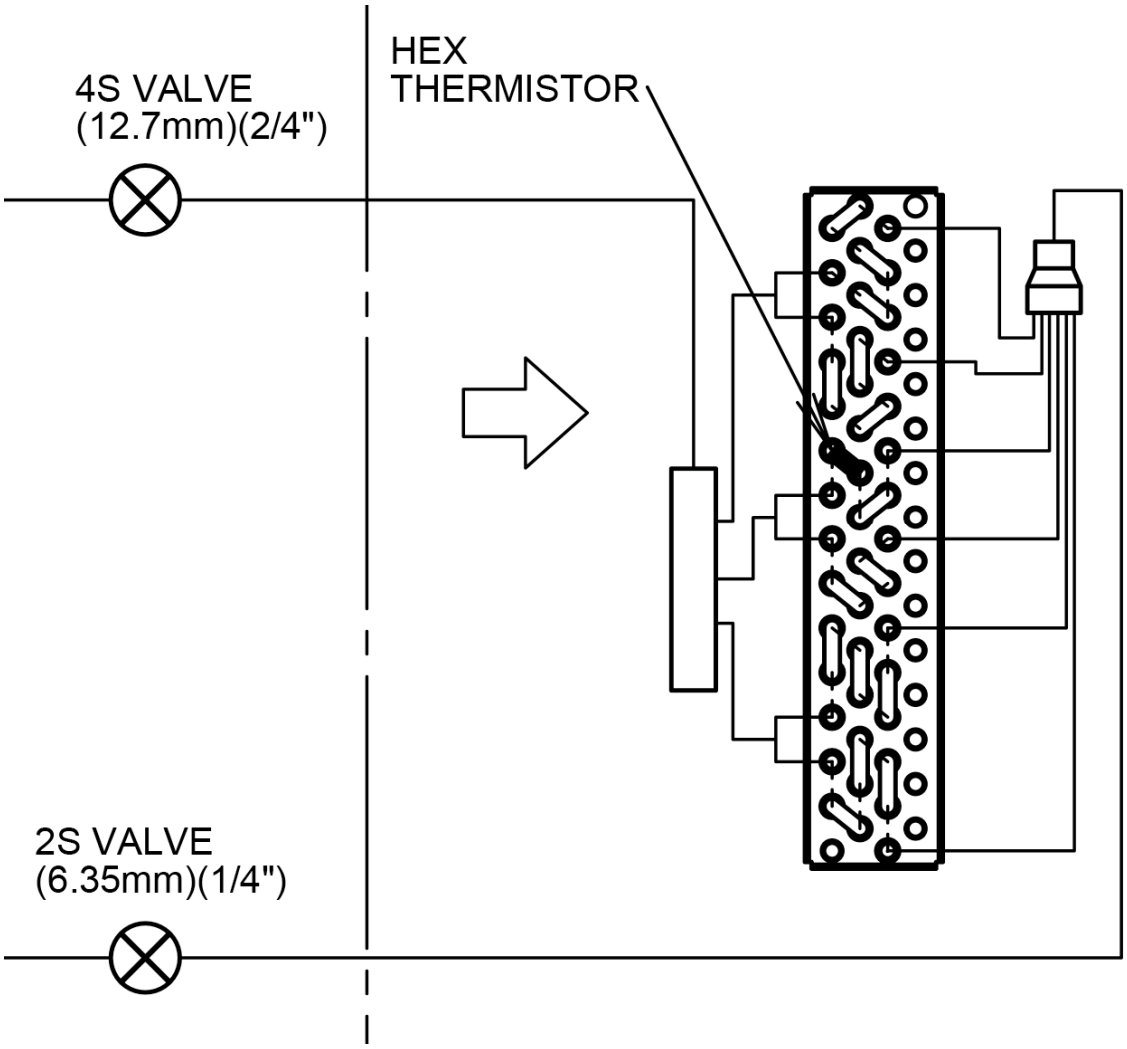

8.2.1. 5 ROOMS MULTIZONE: RAM-110NP5E

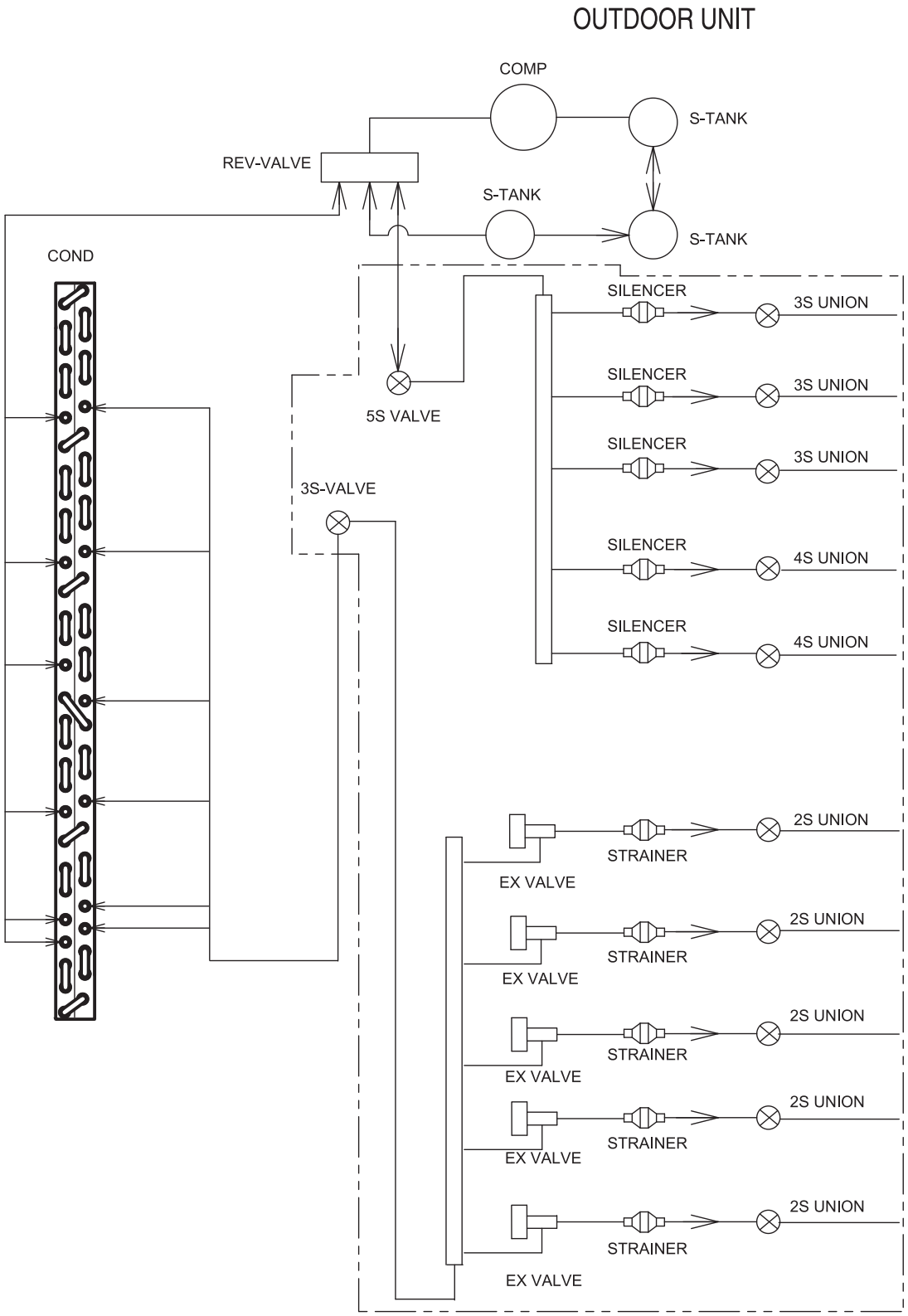

9 CONTROL AND FUNCTION

CONTENTS

9 CONTROL AND FUNCTION 9-1
9.1 WIRELESS REMOTE CONTROL FUNCTION 9-2
9.1.1. RAR-6N1, RAR-6N2, RAR-6NE4, RAR-6N5 AND RAR-6NE1 9-2
9.2 SHIFT VALUE 9-3
9.3 OPERATION LOCK 9-5
9.4 SETTING THE PREVENTION OF MUTUAL INTERFERENCE 9-6
9.5 INTERMITTENT FAN SPEED SETTING 9-6
9.6 FAN SPEED SETTING IN THERMO OFF IN COOLING 9-7
9.7 ERROR CODE INFORMATION 9-8
9.8 ADDITIONAL FUNCTION VIA DIP-SWITCH SETTINGS 9-10
9.8.1 AUTO RESTART FUNCTION 9-10
9.8.2 HEATING/COOLING ONLY MODE SELECTION 9-10

9.1 WIRELESS REMOTE CONTROL FUNCTION

9.1.1. RAR-6N1, RAR-6N2, RAR-6NE4, RAR-6N5 AND RAR-6NE1

RAR-6N1	RAR-6N2	RAR-6NE4	RAR-6N5	RAR-6NE1
(Optional) RAK-50RPE1 RAK-60RPE	(Optional) RAI-25RPE RAI-35RPE RAI-50RPE RAI-60RPE	(Standard) RAF-25RXE RAF-35RXE RAF-50RXE	(Optional) RAD-18QPE RAD-25RPE RAD-35RPE RAD-50RPE RAD-60RPE	(Standard) RAK-18QXE RAK-25RXE RAK-35RXE RAK-50RXE RAK-15QPE RAK-18RPE RAK-25RPE RAK-35RPE RAK-42RPE RAK-50RPE

BUTTONS	FUNCTION
MODE	**MODE Selector** Use this button to select the operationg mode. Every time you press this button, the mode will change from (AUTO) → (HEAT) → (DEHUMIDIFY) → (COOL) and → (FAN) cyclically.
FAN	**FAN SPEED Selector Button** This determines the fan speed. Every time you press this button, the airflow rate will change from (AUTO) → (HIGH) → (MED) → (LOW) → (SILENT) (This button allows selection of optimal or preferred fan speed for each operation mode).
	START/STOP button Press this button to start operation. Press it again to stop operation.
ECO	**ECO button** Use this button to set the ECO mode.
	POWERFUL button Use this button to set the POWERFUL mode.
	SILENT button Use this button to set the SILENT mode.
	INFO button 1) Press this button to display temperature for 10 seconds. 2) Press this button to check monthly power consumption. 3) Press this button to recieve the current calendar and clock.
	ECO SLEEP TIMER button Use this button to set the ECO sleep timer.
	AUTO SWING (Vertical) button Controls the angle of the horizontal air deflector.

	AUTO SWING (Horizontal) button Controls the angle of the vertical air deflector.
10°C	**LEAVE HOME button** Prevent the room temperature from falling too much by setting temperature 10°C~16°C when no one is at home.
	ONE TOUCH CLEAN button Drying indoor heat exchanger after cooling operation to prevent mildew.
	EXTENDED AIR FLOW button Press this button during operation to start extended airflow operation.
WEEKLY TIMER buttons	
OFF TIMER ON	**ON/OFF TIMER button** The device will turn on (off) and off (on) at the designated time.
TIME	**TIME button** Press the button to set starting time of the program
OK	**OK button** Press the button to save the program. The button shall be pressed everytime after finishing a program setting.
DELETE	**DELETE button** 1) Press the button to delete the selected program. 2) Press the button for about 10 seconds by directing the remote controller towards the indoor unit while Mode A or B display blinks, programs for Mode A or B will be deleted both from the indoor unit and the remote controller after the beep sound from the indoor unit.
Mon-Sun	**DAY button** Select the desired day of the week.
1 – 6	**PROGRAM NO. button** Press this button to select a program number.
CANCEL	**CANCEL** 1) Press the button to cancel the current setting process on the screen. 2) Press the button by directing the remote controller towards the indoor unit, hen weekly timer setting will be canceled from indoor unit after the beep sound from the indoor unit. The program setting remains in the remote controller.
SEND	**SEND button** Press the button for about 3 seconds by directing the remote controller towards the indoor unit after finishing the program setting. Timer lamp on the indoor unit will blink rapidly and after the beep soung from indoor unit, TIMER lamp will light up.
CLOCK	**CLOCK button** Press the button to set calendar and clock.
WEEKLY A/B	**WEEKLY TIMER MODE button** 1) Select Mode A or Mode B. 2 modes can be set and stored as a weekly timer. 2) By pressing the button longer than 3 seconds, program setting screen will appear.

9.2 SHIFT VALUE

1. Press and hold (START/STOP) button and TIMER ON (ON) button.
2. Press RESET [RESET] button on the same time. Release RESET [RESET] button only, then release (START/STOP) and TIMER ON (ON) button once Screen 1 appears.

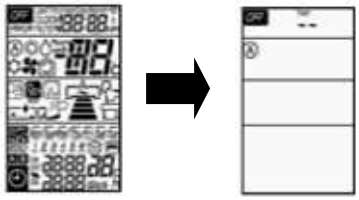

Screen 1 Screen 2

3. Press the MODE (MODE) button to display fan mode (Screen 3).

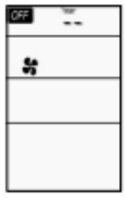

Screen 3

4. Press (START/STOP) and Screen 4 appear.

Screen 4

5. Select FAN (FAN SPEED) button to choose Heating Shift or Cooling Shift Mode (Screen 5).

By setting fan speed to HIGH or MED , it will go to Cooling Shift mode.
By setting fan speed to LOW or SILENT , it will go to Heating Shift mode.

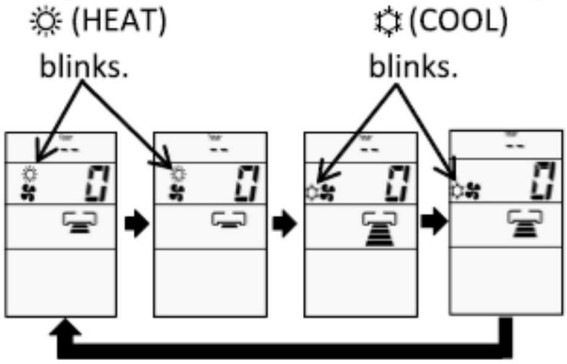

Screen 5

6. Press the Temperature button (or) to adjust the shift value.

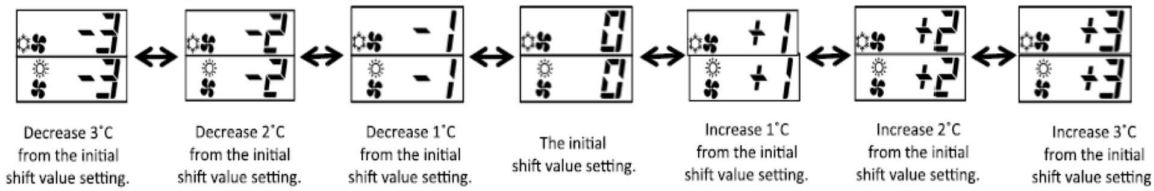

NOTE:
1. There are total of 7 shift values ranging from -3 to 3.
2. The displayed shift value, (HEAT) and (COOL) symbol on the remote controller display will be disappear after 10 seconds
3. The changed shift value will remain unchanged after turned off the power.
4. If “0” is displayed on the remote controller display, it indicates the shift value is now at the initial setting.

9.3 OPERATION LOCK

1. HEATING MODE

a) Press and hold ECO (ECO) and POWERFUL (POWERFUL) buttons, press RESET (RESET) button on the same time. Release RESET (RESET) button only when Screen 1 appear, then release ECO (ECO) button and POWERFUL (POWERFUL) button.

Screen 1

b) Wait until only Screen 2 appear.

Screen 2

c) The heating mode operation is locked.

d) To unlock HEATING mode, repeat step (a). After all operations mode symbols displayed for 10 seconds, the operation mode symbol before cancellation will be display. The heating mode operation is unlocked.

2. COOLING AND DEHUMIDIFYING MODE

a) Press and hold ECO (ECO) and SILENT (SILENT) buttons for at least 5 seconds when the remote controller is OFF.

b) Wait until only and displayed on the screen. The cooling and dehumidifying modes operation is locked.

c) To unlock HEATING mode, repeat step (a). After all operations mode symbols displayed for 10 seconds, the operation mode symbol before cancellation will be display. The cooling and dehumidifying mode operation is unlocked.

9.4 SETTING THE PREVENTION OF MUTUAL INTERFERENCE

1. Please ensure the other indoor unit is OFF.
2. Press [1-6] (PROGRAM NO.) button, [TIMER ON] (ON TIMER) button and [RESET] (RESET) button simultaneously. The remote controller will display Screen 1 and followed by Screen 2. The indoor unit beeps to indicate that it has just received the signal from remote controller.

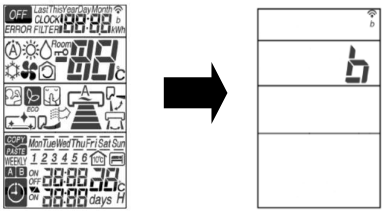

Screen 1 Screen 2

NOTE:
If indoor unit still not receive the correct signal from the correct remote controller, setting shall be made again. By setting again for the 2nd time, the signal address will change from B to A, then repeat again for the 3rd time.

9.5 INTERMITTENT FAN SPEED SETTING

The intermittent fan control during thermo off in Heating Mode can be changed by the remote controller.
(This procedure should be done only by service personnel.)
It is possible to select from 3 patterns.

PROCEDURE

1. Press [START/STOP] button, [Mon-Sun] button and press [RESET] button simultaneously. Release [RESET] button only and make sure that all marks on the remote controller display are indicated, then release [START/STOP] button and [Mon-Sun] button. Remote controller now enters "Intermittent Fan Control Change Mode".

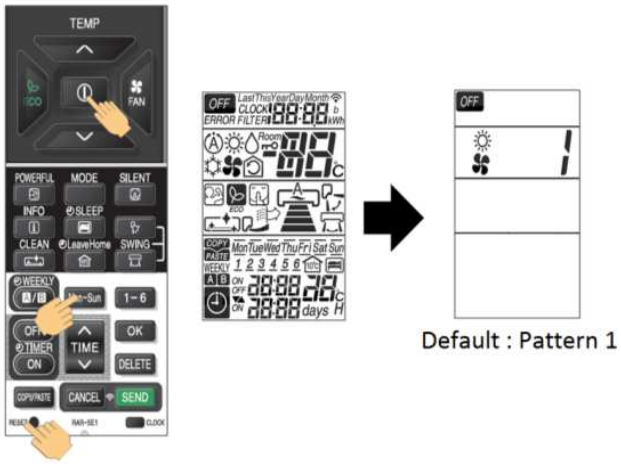

2. Press [ROOM TEMPERATURE setting] [∧(UP)]/[V(DOWN)] buttons.
(The intermittent pattern changed with indoor unit beep sound.)

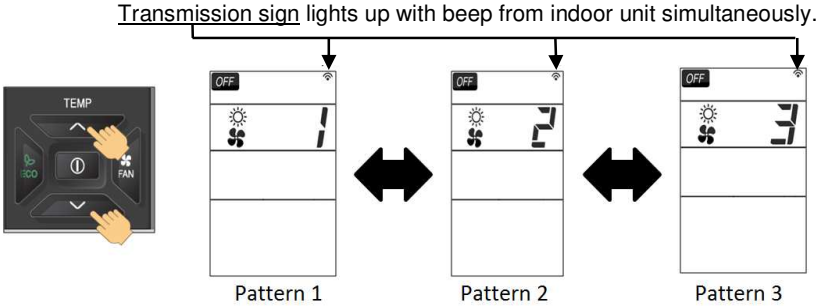

	Pattern 1	Pattern 2	Pattern 3
Single Model	Continuous	30sec ON / 210sec OFF repeatedly	50sec ON / 190sec OFF repeatedly
Multi Model	30sec ON / 210sec OFF repeatedly	50sec ON / 190sec OFF repeatedly	Continuous

NOTE :
(1) The indication of the selected intermittent pattern will disappear after 10 seconds.
(2) The selected intermittent pattern will remain unchanged after the unit is turned off.

9.6 FAN SPEED SETTING IN THERMO OFF IN COOLING

The fan speed in Cooling Mode during thermo off can be changed by the remote controller.
(This procedure shall be implemented strictly by service personnel only.)
It is possible to return it to the default setting.

PROCEDURE

Press POWERFUL [POWERFUL] button and TIME [TIME ∧(UP)] button simultaneously for about 5 seconds when the remote controller is OFF.

Transmission sign lights up with beep from indoor unit simultaneously.

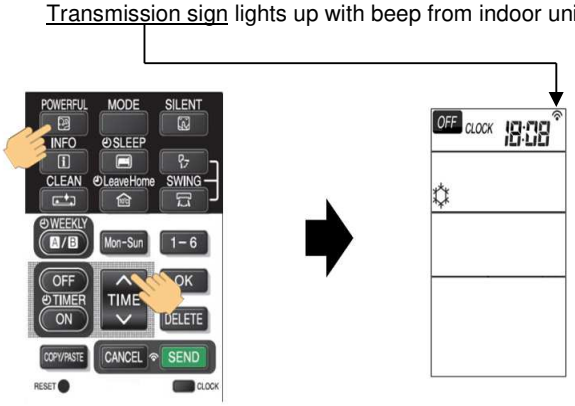

Beep sound pattern : 1) Default setting : Short beep
2) Changed setting : Double beep

	Fan speed during thermo off
Default Setting	Ultra low
Changed Setting	Set fan speed (When auto fan speed is set, the fan speed is low)

NOTE :
(1) The selected fan speed will remain unchanged after the unit is turned off.
(2) If Timer reservation has been set, it will be canceled.
(3) During time setting and timer setting, this operation cannot be set.

9.7 ERROR CODE INFORMATION

1. In case failure occurs to the air conditioner, by pressing INFO (INFO) button, an error code will be displayed.
2. Direct the remote controller towards the receiver of indoor unit (within 2 meters in front of indoor unit) and press INFO (INFO) button.
3. Wait for 2 seconds for signal transmission and the error code will be displayed.

	TIMER LAMP BLINKING	LED1351 BLINKING	CODE	MEANING
INDOOR	-	-	000 00	Normal
	1 time		001 00	Refrigerant cycle fault
	2 times	-	-	Outdoor unit is under forced operation
	3 times	9 times	003 00	Communication error between indoor and outdoor units
	9 times	-	009 00	Indoor thermistor
	10 times	-	010 00	Abnormal rotating numbers
	13 times	-	013 00	IC401 data reading error
OUTDOOR	4 times	2 times	002 01	Peak current cut
	4 times	3 times	003 01	Compressor abnormal low speed rotation
	4 times	4 times	004 01	Compressor switching failure
	4 times	5 times	005 01	Overload lower limit cut
	4 times	6 times	006 01	OH thermistor temperature rise
	4 times	7 times	007 01	Abnormal outdoor thermistor
	4 times	8 times	008 01	Acceleration defective
	4 times	9 times	009 01	Communication error
	4 times	10 times	010 01	Abnormal power source
	4 times	11 times	011 01	Fan stop for strong wind
	4 times	12 times	012 01	Fan motor fault
	4 times	13 times	013 01	EEPROM reading error
	4 times	14 times	014 01	Active converter defective
	4 times	15 times	015 01	Abnormal PWB circuit

	TIMER LAMP BLINKING	LD1351 Lit LD1352 BLINKING	CODE	MEANING
OUTDOOR	4 times	1 times	071 01	Overheat thermostat
	4 times	2 times	072 01	Defrost thermostat
	4 times	3 times	073 01	Outdoor temperature thermostat
	4 times	4 times	074 01	Narrow pipe thermostat (indoor 1)
	4 times	5 times	075 01	Wide pipe thermostat (indoor 1)
	4 times	6 times	076 01	Narrow pipe thermostat (indoor 2)
	4 times	7 times	077 01	Wide pipe thermostat (indoor 2)
	4 times	8 times	078 01	Narrow pipe thermostat (indoor 3)
	4 times	9 times	079 01	Wide pipe thermostat (indoor 3)
	4 times	10 times	080 01	Narrow pipe thermostat (indoor 4)
	4 times	11 times	081 01	Wide pipe thermostat (indoor 4)
	4 times	12 times	082 01	Narrow pipe thermostat (indoor 5)
	4 times	13 times	083 01	Wide pipe thermostat (indoor 5)

9.8 ADDITIONAL FUNCTION VIA DIP-SWITCH SETTINGS

A new DIP Switch is available on the PWBs of the indoor unit that provide additional functions via the settings on the switches.

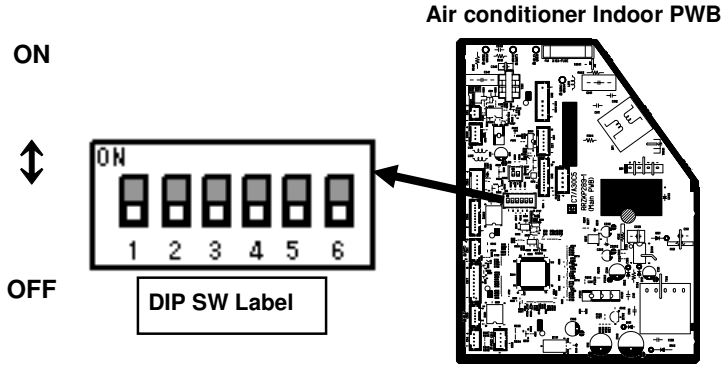

Pin No.	Function	Switch Position / Setting					
1	AUTO RESTART function	OFF	Enable	ON	Disable		
2	DRY CONTACT function	OFF	Disable	ON	Enable		
3	DRY CONTACT Logic Select	OFF	HI Input Active	ON	LO Input Active		
4	HEATING / COOLING ONLY MODE SELECT	OFF	NORMAL (HEAT AND COOL)	OFF	HEATING ONLY	ON	COOLING ONLY
5		OFF		ON		OFF	
6	REMOCON ID SELECT ❖1	OFF	SELECT ID A	ON	SELECT ID B		

NOTE:

❖1 The setting of pin no. 6 is disabled for this model. Please refer to **9.4 SETTING THE PREVENTION OF MUTUAL INTERFERENCE**.

9.8.1 AUTO RESTART FUNCTION

The AUTO RESTART function can be enabled or disabled by setting Pin No. 1 on the DIP SWITCH above to the ON or OFF position accordingly.

9.8.2 HEATING/COOLING ONLY MODE SELECTION

When this function is enabled, the operation mode could be locked to either Heating Only (Heating or Fan) or Cooling Only (Cooling, Fan or Dehumidifying) by setting the Pin No. 4 and 5 accordingly.

LOCKED MODE	REMARKS
HEATING ONLY	Unit will not enter into Cooling mode although cooling mode is selected using the remote controller.
COOLING ONLY	Unit will not enter into Heating mode although heating mode is selected using the remote controller.

10 OPTION LIST

CONTENTS

10 OPTION LIST 10-1
10.1 WIRED REMOTE CONTROL SPX-RCDA AND SPX-RCDB 10-2
10.1.1 SHIFT VALUE 10-3
10.1.2 ERROR CODE INFORMATION 10-4
10.2 H-LINK ADAPTOR – PSC 6RAD 10-7
10.2.1 SAFETY SUMMARY 10-7
10.2.2 INSTALLATION WORK 10-7
10.2.3 ELECTRICAL WIRING 10-8
10.2.4 DIP SWITCH SETTING 10-9
10.2.5 TEST RUN 10-10
10.3 DRY CONTACT (SPX-WDC2 AND SPX-WDC3) APPLICATION (USING DIP SWITCH) 10-11
10.4 DISTRIBUTOR – SPX-DST1 10-14
10.5 REMOTE SENSOR - SPX-RTH1 10-15
10.5.1 SELECTION OF INSTALLATION POSITION 10-15
10.5.2 INSTALLATION PROCEDURE 10-15
10.5.3 WIRING PROCEDURES 10-15

10.1 WIRED REMOTE CONTROL SPX-RCDA AND SPX-RCDB

This controls the operation function and timer setting of the room air conditioner.

RAR-5G1 (SPX-RCDA)	RAR-5G2 (SPX-RCDB)	
RAD-18QPE RAD-25RPE RAD-35RPE RAD-50RPE RAD-60RPE	RAK-18QXE RAK-25RXE RAK-35RXE RAK-50RXE RAK-15QPE RAK-18RPE RAK-25RPE RAK-35RPE RAK-42RPE RAK-50RPE RAK-50RPE1 RAK-60RPE	RAF-25RXE RAF-35RXE RAF-50RXE RAI-25RPE RAI-35RPE RAI-50RPE RAI-60RPE

BUTTONS	FUNCTION
	MODE Selector Use this button to select the operationg mode. Every time you press this button, the mode will change from (AUTO) → (HEAT) → (DEHUMIDIFY) → (COOL) and → (FAN) cyclically.
FAN	**FAN SPEED Selector Button** This determines the fan speed. Every time you press this button, the airflow rate will change from (AUTO) → (HIGH) → (MED) → (LOW) → (SILENT) (This button allows selection of optimal or preferred fan speed for each operation mode).
	ON/OFF button Press this button to start operation. Press it again to stop operation.
	SLEEP button Use this button to set the SLEEP timer.
SET	**SET button** Timer setting reservation.
OFF	**OFF button** Select the turn OFF timer.
ON	**ON button** Select the turn ON timer.
CANCEL	**CANCEL button** Cancel timer reservation.
	AUTO SWING (Vertical) button Controls the angle of the horizontal air deflector.
	ROOM TEMPERATURE setting button Value will change quicke when keep pressing.

10.1.1 SHIFT VALUE

1. Press and hold (ON/OFF) button and (ON TIMER) button at the same time while giving a single press on the RESET button until remote controller now enter 'Shift value change mode'.
2. Press (ON/OFF) button so that the display indicates (FAN) speed.
3. Select (FAN SPEED) button to choose Heating Shift or Cooling Shift Mode.

   By setting fan speed to HIGH or MED , it will go to Cooling Shift mode.
   By setting fan speed to LOW or SILENT , it will go to Heating Shift mode.

4. Press (ROOM TEMPERATURE) button to change the shift value (-3°C ~ 0 ~ 3°C).
5. Press (ON/OFF) button to end 'Shift value setting mode'.

NOTE:
1. There are total of 7 shift values ranging from -3 to 3.
2. The changed shift value will remain unchanged after turned off the power.

10.1.2 ERROR CODE INFORMATION

1. In case failure occurs to the air conditioner, the error code will constantly appear on the wired remote controller display.

	TIMER LAMP BLINKING	LD1351 BLINKING	CODE	MEANING
INDOOR	-	-	-	Normal
	1 time		01 O	Refrigerant cycle fault
	2 times	-	-	Outdoor unit is under forced operation
	3 times	9 times	03 O	Communication error between indoor and outdoor units
	9 times	-	09 O	Indoor thermistor
	10 times	-	10 O	Abnormal rotating numbers
	13 times	-	13 O	IC401 data reading error
OUTDOOR	4 times	2 times	02 I	Peak current cut
	4 times	3 times	03 I	Compressor abnormal low speed rotation
	4 times	4 times	04 I	Compressor switching failure
	4 times	5 times	05 I	Overload lower limit cut

	TIMER LAMP BLINKING	LD1351 BLINKING	CODE	MEANING
OUTDOOR	4 times	6 times	06 I	OH thermistor temperature rise
	4 times	7 times	07 I	Abnormal outdoor thermistor
	4 times	8 times	08 I	Accelaration defective
	4 times	9 times	09 I	Communication error
	4 times	10 times	10 I	Abnormal power source
	4 times	11 times	11 I	Fan stop for strong wind
	4 times	12 times	12 I	Fan motor fault
	4 times	13 times	13 I	EEPROM reading error
	4 times	14 times	14 I	Active converter defective
	4 times	15 times	15 I	Abnormal PWB circuit
		LD1351 Lit LD1352 BLINKING		
	4 times	1 times	71 I	Overheat thermostat
	4 times	2 times	72 I	Defrost thermostat

	TIMER LAMP BLINKING	LD1351 Lit LD1352 BLINKING	CODE	MEANING
OUTDOOR	4 times	3 times	73 I	Outdoor temperature thermostat
	4 times	4 times	74 I	Narrow pipe thermostat (indoor 1)
	4 times	5 times	75 I	Wide pipe thermostat (indoor 1)
	4 times	6 times	76 I	Narrow pipe thermostat (indoor 2)
	4 times	7 times	77 I	Wide pipe thermostat (indoor 2)
	4 times	8 times	78 I	Narrow pipe thermostat (indoor 3)
	4 times	9 times	79 I	Wide pipe thermostat (indoor 3)
	4 times	10 times	80 I	Narrow pipe thermostat (indoor 4)
	4 times	11 times	81 I	Wide pipe thermostat (indoor 4)
	4 times	12 times	82 I	Narrow pipe thermostat (indoor 5)
	4 times	13 times	83 I	Wide pipe thermostat (indoor 5)

10.2 H-LINK ADAPTOR – PSC 6RAD

10.2.1 SAFETY SUMMARY

DANGER:

– *DO NOT pour water into the remote control switch (hereafter called "controller"). This product is equipped with electrical parts. This will cause serious electrical shock.*

WARNING:

– *DO NOT perform installation work and electrical wiring connection by yourself. Contact your distributor or dealer of HITACHI and ask then for installation work and electrical wiring by service person. The specified cable should be used to connect (i) room air conditioner and adaptor, and (ii) controller and adaptor.*

CAUTION:

– *DO NOT install the indoor unit, outdoor unit, controller and cable as such places as:*
  – *where there is oil vapor and dispersion of oil*
  – *where there is sulfuric environment (near the hot springs)*
  – *where there is a flammable gas*
  – *where there is salty environment (near the sea)*

– *DO NOT install the indoor unit, outdoor unit, controller and cable within approximately 3 meters from strong electromagnetic wave radiators, such as medical equipment. In case that the controller is installed in a place where there is electromagnetic wave direct-radiation, shield the controller and cables by covering with the steel box and running the cable through the metal conduit tube.*

– *In case that there is electric noise at the power source for the indoor unit, provide a noise filter.*

10.2.2 INSTALLATION WORK

■ Before installation

Check the contents and the number of the accessories in the packing.

Adaptor	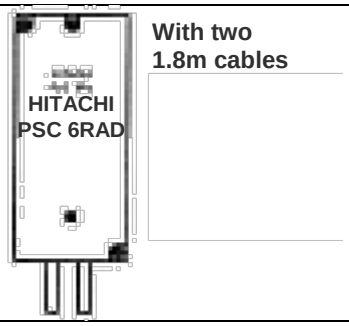
1 piece of cover for hiding the covering	**Attached 2 sided tapes** 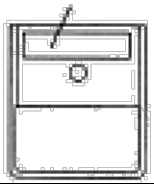
Two-sided tape for attaching to Adaptor	**110x40x3mm**
2 connectors for H-Link connection	
2 tapping screws for attaching to wall	**ϕ3.0 x 10mm**
2 screws for attaching to wooden wall	**ϕ3.1 x 16mm**

1) RAC adaptor can be installed to the wall as well as on the air conditioner itself
2) Install RAC adaptor in the vertical surface as shown below.

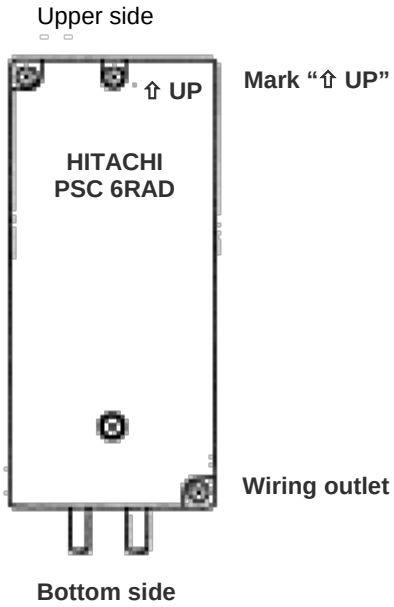

3) Installation procedure
   a) When installing to the wall.
      i) Fix the adaptor with 2 screws. Tapping screw is for metal surface, and other screw is for wooden surface.

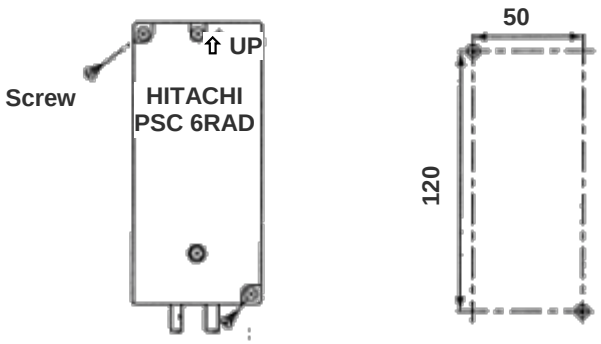

      ii) When using the cover
      It can be installed at the right and left side of room air conditioner. Fix the cover and RAC adaptor with the two-sided tape (accessory).

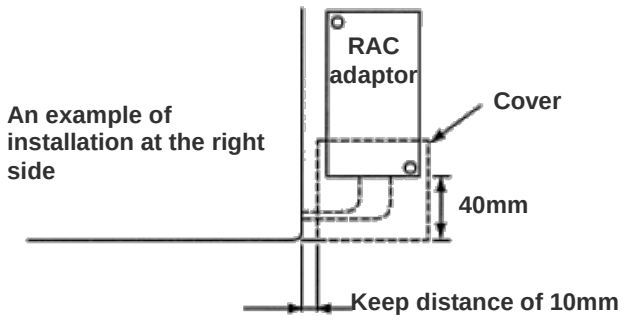

b) When installing on the room air-conditioner
In case that it cannot be installed to the wall due to the space or material problem, install the RAC adaptor with the two-sided tape (accessory) on the room air-conditioner.
   i) Confirm if the piping cover of the unit can be removed when performing the service maintenance, and then fix the RAC adaptor in the side of room air-conditioner with two-sided tape. (Available at the right as well as left side)
   ii) Clean the surface to be installed with a dry cloth.

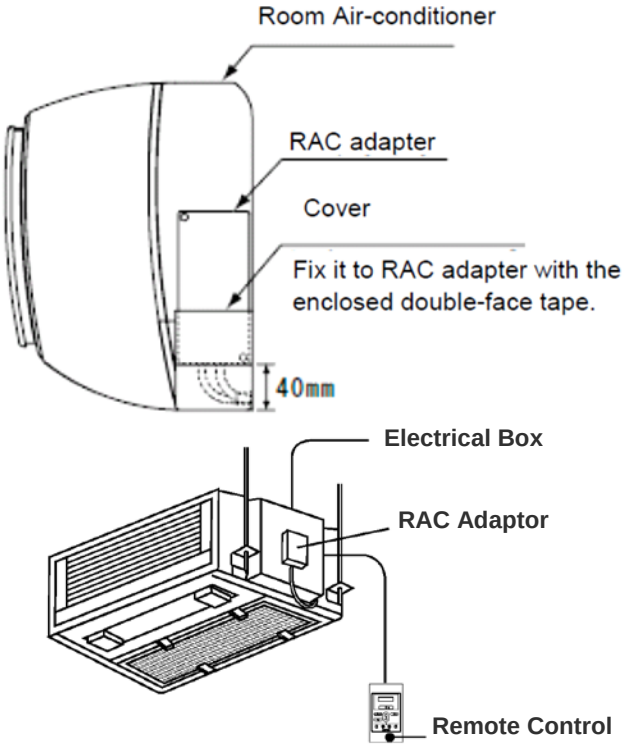

NOTE:

– *Consider the following points since the adhesiveness changes according to the environmental conditions (temperature, humidity etc)*

– *The adhesiveness is decreased when there is humidity or oil.*

– *Warm the adhesive part and installation place of the two-sided tape to avoid the decrease of the adhesiveness in case the ambient temperature is low.*

– *DO NOT touch the adhesive part by fingers nor re-attach it many times. The adhesiveness has decreased and the RAC adaptor may fall off.*

– *DO NOT apply any force within 24 hours after installation.*

10.2.3 ELECTRICAL WIRING

■ **System configuration**

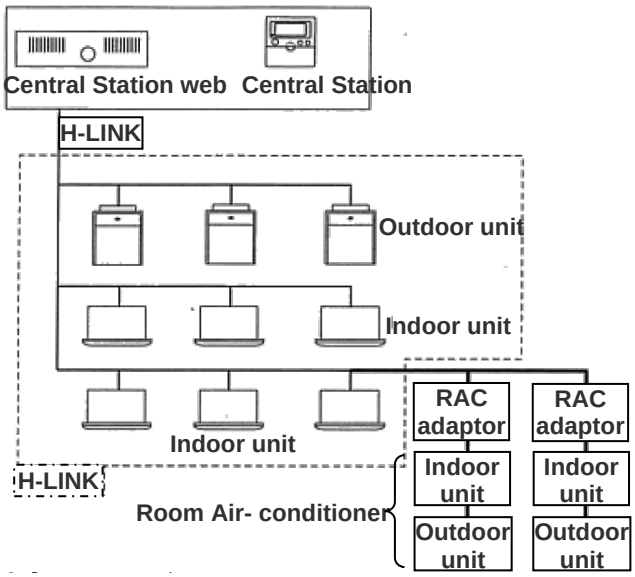

CAUTION:

– *Turn OFF the power supply of the room air-conditioner of the central control device when performing the wiring work*

– *DO NOT run all the H-LINK cable or power supply cable along the other signal cable, or malfunction may occur due to the noise, etc. If it is required to run along the other transmission cable, separate the cable more than 30cm, or run the cable through the metal tube and earth the tube.*

– *Follow local codes and regulations when performing electrical wiring and earth wiring.*

– *Transmissions cable used in H-LINK shall be 2 cores cable (0.7mm^2 to 1.25mm^2 for model: VCTF, VCT, CVV, MVVX, CVVX, VVR, VVF) or 2 cores twisted pair cable (model: KPEV, KPEV-Spec). Total length of cable shall be below 1000mm.*

– *DO NOT use wire with more than 3 cores.*

■ **Internal components and Wiring connections**

Check the contents and the number of the accessories in the packing.

- Access
  Open the cover by removing the ① and ② screws.

- Wiring Connection
  Connection with Room Air-Conditioner
  i) Remove the front cover of the room air-conditioner and the cover of electrical box.
  ii) The cable attached with the connector of the RAC adaptor shall be connected with the connector of indoor PCB

iii) Install the electrical box cover paying attention not to clamp the cable. Read the installation manual of each room air-conditioner for confirming how to connect and how to assemble the cable of the RAC adaptor.

CAUTION:

– *Disconnect the power plug before performing this work*

– *Turn OFF the break power source in case the power is supplied from the outdoor unit.*

- Connection of Transmission Cable

H-LINK transmission cable connecting to RAC adaptor shall be connected to H-LINK.

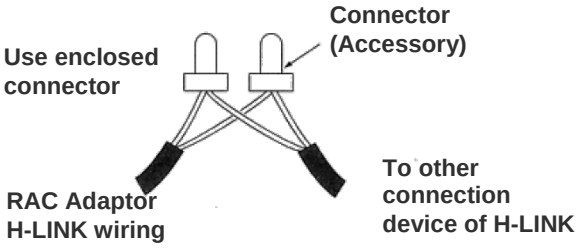

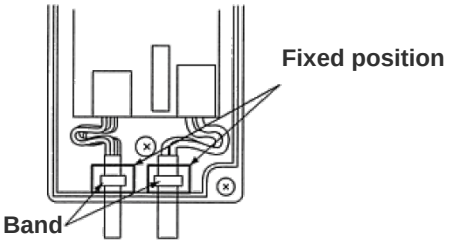

CAUTION:

– *DO NOT connect incorrect wiring. It may cause the failure of the RAC Adaptor. Especially pay attention not to apply high voltage e.g. AC400/230V.*

– *DO NOT perform the wiring work while power to the central station or the RAC Adaptor is still being supplied. It may cause malfunction. Turn OFF devices when performing the wiring work.*

– *The RAC Adaptor side cable should not overload to the connector.*

– *DO NOT clamp the cable when attaching the RAC adaptor cover.*

– *Band should not be loose and in fixed position.*

10.2.4 DIP SWITCH SETTING

1) Switch OFF the power of room air conditioner before setting the DIP switch. If the power is ON, the settings are INVALID.
2) The position of the DIP switch is shown below.

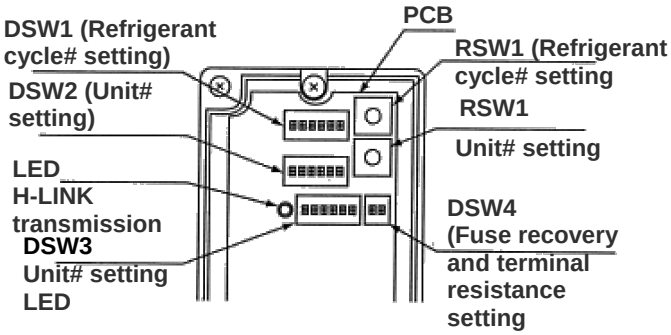

CAUTION:

– *DO NOT turn ON various pins of DSW1 and DSW2*

3) Set the refrigerant cycle# by RSW1 and DSW1

DSW1 (Ten digit)	RSW1 (Last digit)
	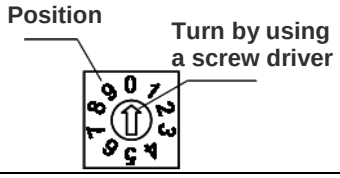
DSW1 and RSW1 are set “0” before shipment. Up to 15 cycles can be set.	
E.g. Setting in Ref No. 5 **No. 1 pin is OFF**	**RSW1** **The position is Set 5**

4) Set the unit No. by RSW2 and DSW2

DSW2 (Ten digit)	RSW2 (Last digit)
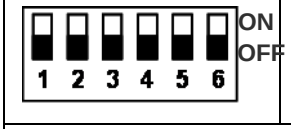	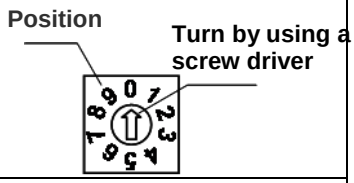
DSW2 and RSW2 are set “0” before shipment. Up to 15 cycles can be set.	
E.g. Setting in Unit No. 15 **No. 1 pin is OFF**	**RSW2** 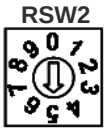 **The position is Set 5**

5) Slave unit.

In case of setting various RAC adaptors in the same refrigerant cycle, set the RAC adaptor with smallest Unit# as a master unit. In case of setting only one RAC adaptor in a refrigerant system, this adaptor should be a master unit. Set this procedure by DSW3.

Master Unit setting	Setting before shipping (slave unit setting)
ON ↑ 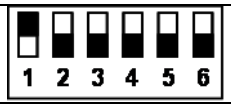	ON ↑ 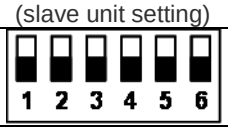

●: Master Unit setting

○: Setting before Shipping (Slave Unit setting)

Indoor Unit#

Refrigerant Unit#

	0	1	2	3	4	5	6	7		
0	●	○	○	○	○					
1			●	○	○					
2				●	○	○	○	○		
3		●								
4										

CAUTION:

– *DO NOT set various main adaptors in the same refrigerant cycle.*

6) Procedure when applying 200V voltage to H-LINK wiring incorrectly.

In case of applying 200V voltage to H-LINK wiring incorrectly, the fuse installed in a transmission circuit on PCB will blow out. In this case, reconnect the wiring correctly and turn ON No. 2 pin of DSW4 on PCB. The transmission circuit can be recovered. (If applying this error again, the transmission circuit can not be recovered)

PCB

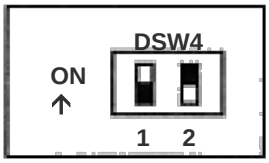

Turn ON No.2 pin of DSW4

7) Terminating resistance is set in whole H-LINK system.
   a) If H-LINK connecting devices like package air-conditioner are connected besides the RAC Adaptor, set the terminating resistance by those connecting devices. The terminating resistance should be set ON in only one position in whole H-LINK system.
   b) In case that H-LINK is connected only by the RAC adaptor, set the terminating resistance by the RAC adaptor. The terminating resistance should be set ON in only one position in whole H-LINK system.

PCB

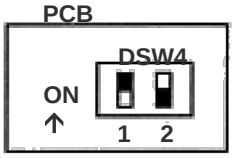

Turn ON No.1 pin of DSW4

10.2.5 TEST RUN

Test run should be performed in the following after finishing the installation, wiring and setting. Refer to the installation manuals enclosed with the control system equipment.

1) Confirmation of RAC Adaptor Connection
   Confirm if the RAC adaptor connection is recognized in the control system equipments. In case that it is not confirmed, check the transmission cable, refrigerant cycle #, indoor unit #, terminal resistance setting etc.
2) Registration
   Confirm if the RAC adaptor connection is recognized.
3) Confirmation of RUN/STOP Operation.
   Confirm if the room air-conditioner operate correctly by RUN/STOP from the central control system equipments. Check also if the room air-conditioner operation changes correctly by each setting.

10.3 DRY CONTACT (SPX-WDC2 AND SPX-WDC3) APPLICATION (USING DIP SWITCH)

The dry contact system enables the operation of the air conditioner indoor unit to be controlled by using external dry contacts (with non voltage) such as card-key controller or window for facilities such as hotels.

Table 1 (Applicable models and related information)

Optional Connecting cord Accessory SPX-WDC#		Model	DIP SW Label	CN#
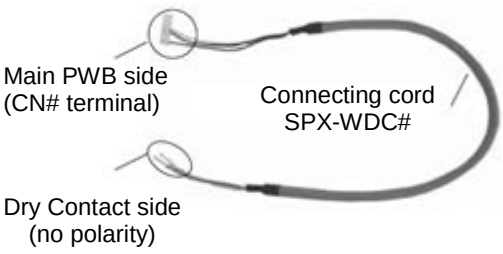	SPX-WDC2	RAI-25/35/50/60RPE	SW501	CN9
		RAD-18QPE RAD-25/35/50/60RPE	SW501	CN9
	SPX-WDC3	RAK-18QXE RAK-25/35/50RXE	DSW1	CN6
		RAK-15QPE RAK-18/25/35/42/50RPE	DSW1	CN6
		RAK-50RPE1 RAK-60RPE	DSW1	CN6
		RAF-25/35/50RXE	DSW1	CN6

Note:
1) DRY CONTACT function is "Enable" by set pin No. 2 of the DIP SWITCH (refer to table 1 for the label) to ON position.
2) Select the proper setting for DRY CONTACT LOGIC INPUT pin No. 3 on DIP SWITCH (refer to Table 1 for the label)
   i) Set to OFF position (Hi Input) if the type of Dry Contact switch to be used (for the CARD KEY UNIT or Window) is of contact type a (Normally Open Type) as shown in below diagram.
   ii) Set to ON position (Lo Input) if the type of Dry contact switch to be used (for the CARD KEY UNIT or Window) is of contact type b (Normally Close Type) as shown in below diagram.

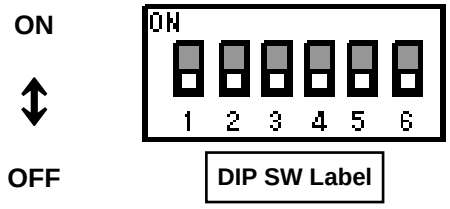

Pin No.	Function	Switch Position / Setting			
2	DRY CONTACT function	OFF	Disable	ON	Enable
3	DRY CONTACT Input Logic	OFF	HI Input Active	ON	LO Input Active

- Please decide the type of dry contact you will be using and set the position of the DIP Switch No. 2 and 3 accordingly

[1] CHECK DRY CONTACT OF CARD KEY UNIT

	AIR CONDITIONER Standby	**AIR CONDITIONER Operating**
CARD KEY (Door Switch)	REMOVE	INSERT 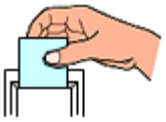
Contact type a	OPEN	CLOSE
Contact type b	CLOSE	OPEN

[2] SET THE POSITION OF DIP SWITCH

POSITION CONDITION OF DIP SWITCH	
INITIAL CONDITION (CARD KEY NO USE) 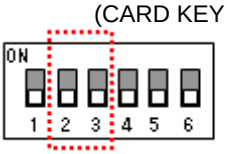	No.2 : OFF No.3 : OFF
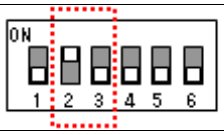	**HI Input Active** No.2 : ON No.3 : OFF
	LO Input Active No.2 : ON No.3 : ON

After all connection has been done as below diagram, ON the breaker and push ON button of wireless remote controller or wired remote controller to operate the air conditioner unit.

- When the CARD KEY is in insert condition, the air conditioner operation is allowable by remote controller.
- When the dry contact switch on the Card Key Unit is open (refer to diagram below for contact type a), the unit stops to operate (it takes 10 seconds to stop the unit operation after the dry contact switch on the card key turns off) and vice versa.
- When the card key is removed from the Card Key Unit, the wireless remote controller cannot be used.
- When the card key is removed from the Card Key Unit, the wired remote controller LCD display is activated; however it has no control over the unit.
- The suitable accessory Connecting Cord (accessory code#: SPX-WDC2 or SPX-WDC3) need to be used to connect the Card Key Unit's dry contact switch to the connector on the control board of the indoor unit. Please refer to Table 1 to select suitable accessory code# for the concerning indoor model.

Example of wiring connection to Card Key Unit will be as below (reference only)

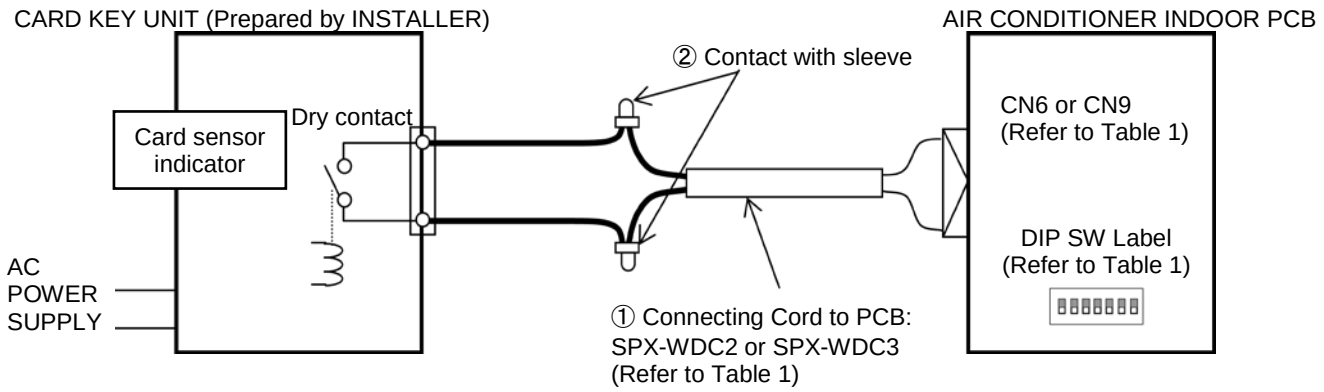

- CONNECTION EXAMPLE

i. Pin No. 3 of DIP SWITCH is set to OFF position (HI Input Active) for Dry Contact Type a

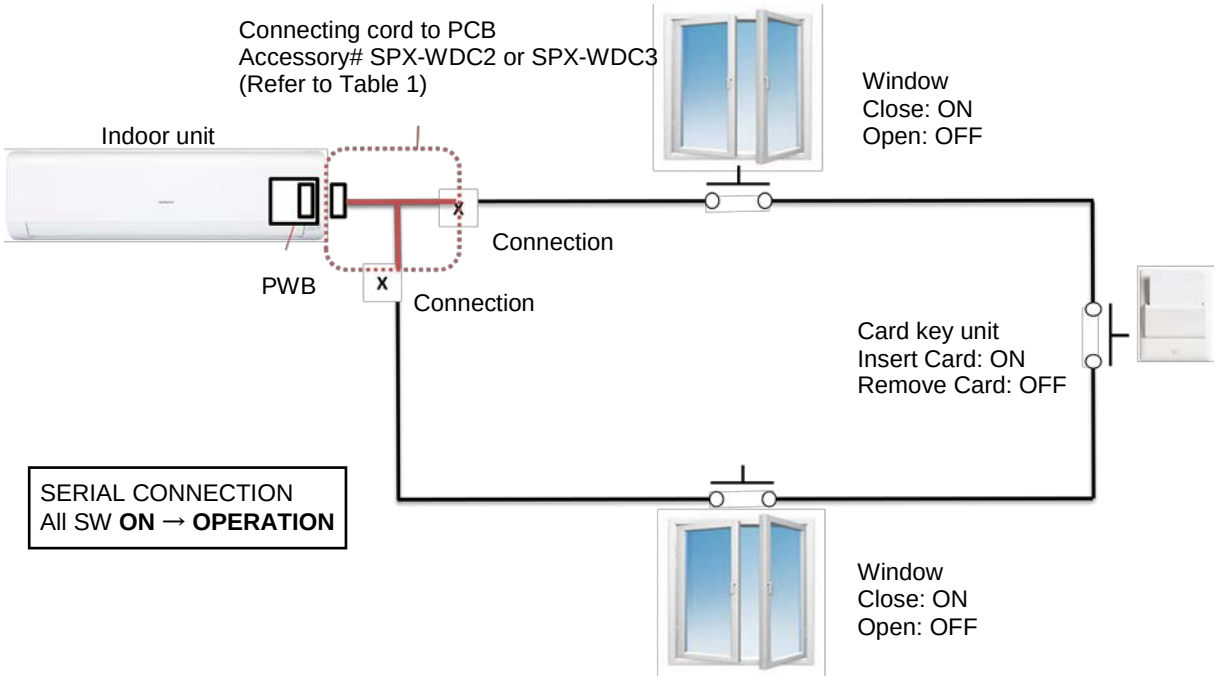

ii. Pin No. 3 of DIP SWITCH is set to ON position (LO Input Active) for Dry Contact Type b

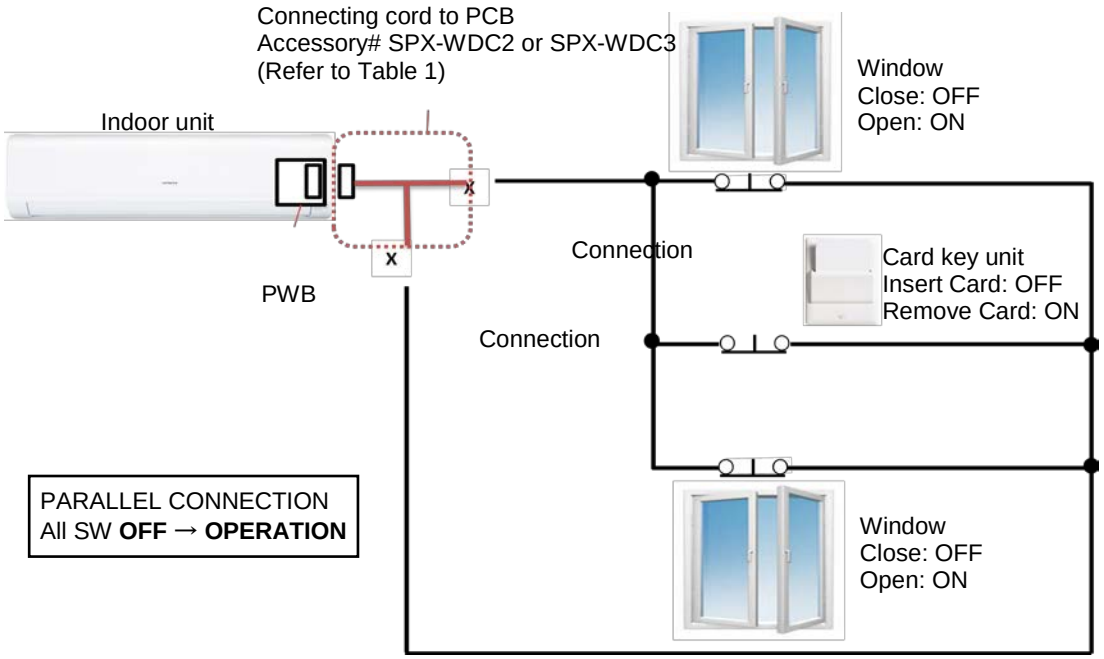

Please refer to the actual manual supplied with the optional connecting cords SPX-WDC2/WDC3 for more details.

10.4 DISTRIBUTOR – SPX-DST1

The optional distributor is to be used together with the wired remote controller when there is a need to centralize the control of multiple indoor units using only a single wired remote controller.

A single distributor could be connected further to 3 separate distributors so that up to 13 units of indoor could be controlled by a single wired remote controller.

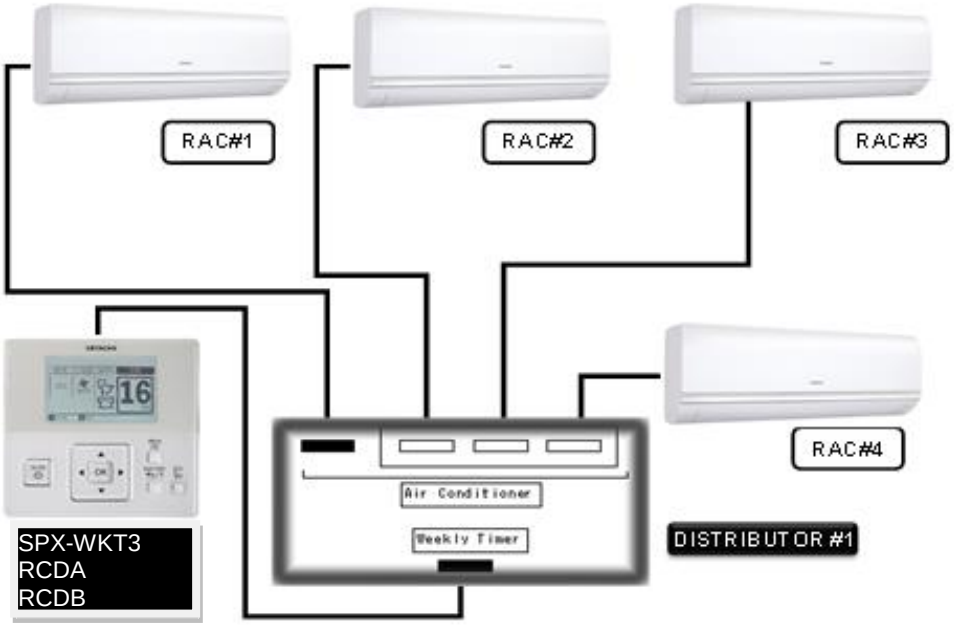

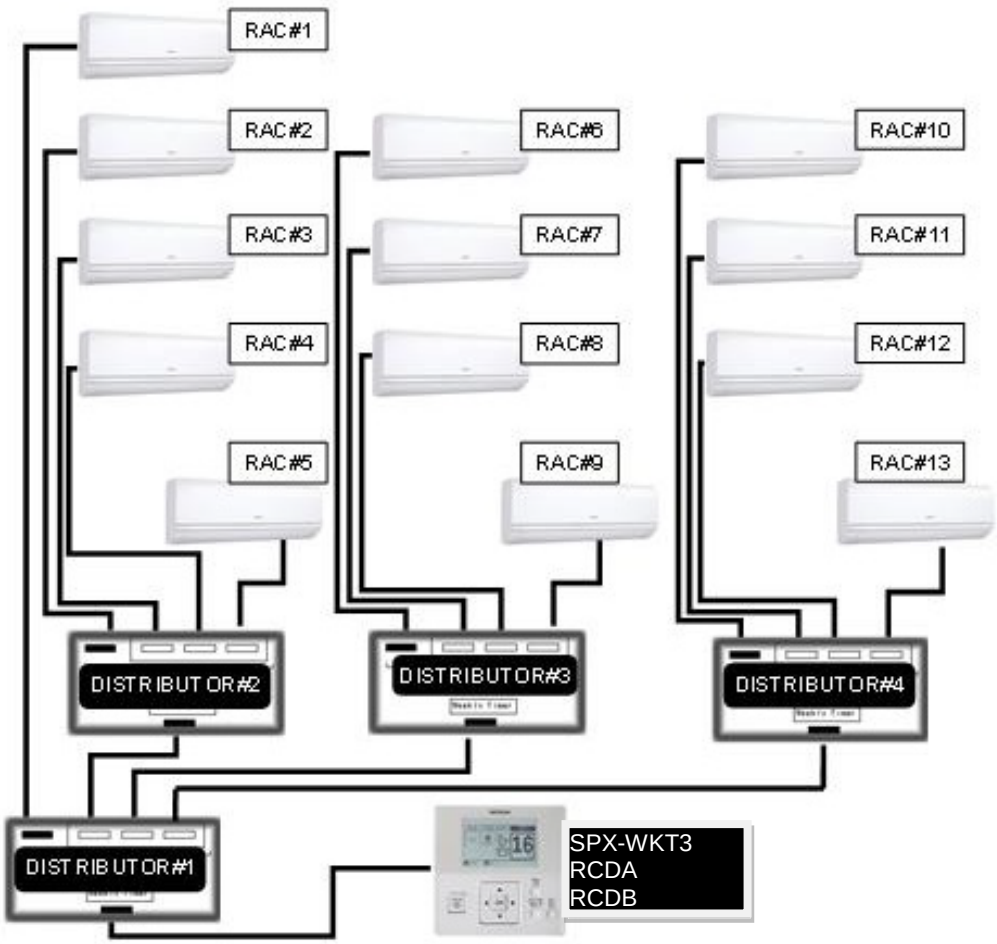

10.5 REMOTE SENSOR - SPX-RTH1

This remote sensor is applicable to Duct type indoor unit for Hitachi split system air conditioner.

10.5.1 SELECTION OF INSTALLATION POSITION

The thermistor for detecting room temperature is installed inside the remote sensor
The installation position of the remote sensor should be determined in consideration with the following conditions.

- Where the average room temperature can be detected.
- Where is not exposed to the sun
- Where the heat source is not located near the remote sensor.
- Where the discharge air from the air conditioner does not blow directly.
- Where is not affected by the outdoor air when opening / closing the door, etc

10.5.2 INSTALLATION PROCEDURE

- **In case of mounting onto the wall (Fig.1)**
  - Make the wiring on the sensor box, and let the wires for sensor through the box slot.
  - Fix the sensor box onto the wall with 2 screws (B)
  - In case that the sensor box can not be fixed onto the wall with screws, fix it onto the wall by using the double sided adhesive tapes, etc.
- **In case of mounting onto Electrical Switch box (Fig. 2 and 3)**
  - Make the holes for fixing sensor box on the Switch Box Cover (A) (field-supplied) as shown on the Fig. 3 and fix the sensor box to the plate with screws (B)
  - Pay attention that the hole for air intake on the sensor box (C) may not be shut.

Fig. 1

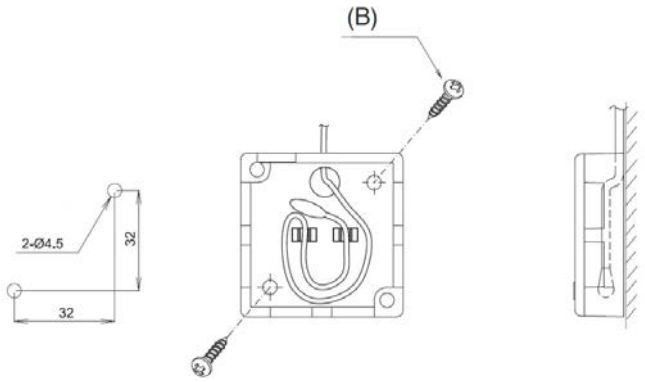

Fig. 2

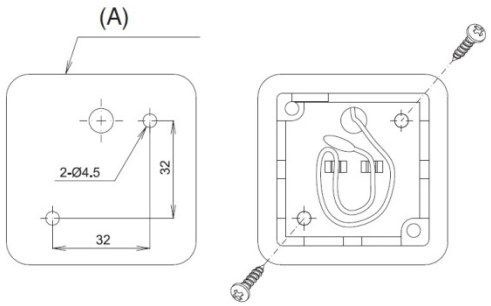

Fig. 3

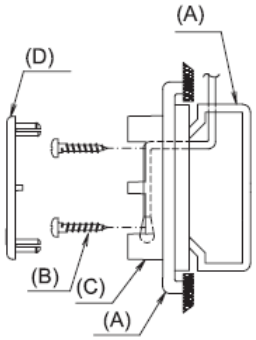

10.5.3 WIRING PROCEDURES

- Remove the original room thermistor from CN1 at the indoor printed circuit board.
- Connect the cord (15m) of the remote sensor to CN1 (Black) of the indoor printed circuit board.

Please refer to the actual manual supplied with the SPX- RTH1 for more details.

HITACHI

TC_ERP-MULTI-R32(2021)-02